PROJECT MANUAL – CONSTRUCTION DOCUMENTS

March 13, 2026

PIONEER VALLEY TRANSIT AUTHORITY
UMASS LIFT REPLACEMENT

UMASS TRANSIT FACILITY
185 HOLDSWORTH WAY
AMHERST, MA 01002

PVTA IFB #26-012
Wendel Project #448715

wendel

TABLE OF CONTENTS

DIVISION 00 – PROCUREMENT AND CONTRACTING REQUIREMENTS

001113	Advertisement for Bids
002113	Instructions to Bidders
	- AIA Document A701-2018
002113A	PVTA Protest Procedures
002113B	PVTA Protest Procedures Appendix
002213	Supplementary Instructions to Bidders
002600	Procurement Substitution Procedures
002600A	Substitution Request Form
004100	General Bid Form
004110A	Bidder's Checklist
005150	Standard Form of Agreement Between Owner and Contractor
	- AIA Document A101-2017
006100	PVTA Payment and Performance Bonds
007000	General Conditions of the Contract for Construction
	- AIA Document A201-2017
007100	Supplementary Conditions
007150	Prevailing Wage Rate Schedule

CERTIFICATIONS AND CLAUSES

State Required Certifications
Federally Required Certifications
Federally Required Contract Clauses

DIVISION 01 – GENERAL REQUIREMENTS

011000	Summary
012100	Allowances
012200	Unit Prices
012500	Substitution Procedures
012600	Contract Modification Procedures
012900	Payment Procedures
013100	Project Management and Coordination
013100a	Request Form for Electronic Files
013100b	Request for Information
013200	Construction Progress Documentation
013233	Photographic Documentation
013300	Submittal Procedures
013300a	Wendel Submittal Transmittal
014000	Quality Requirements
014200	References
014533	Code Required Special Inspections and Procedures
015000	Temporary Facilities and Controls

016000 Product Requirements
017300 Execution
017419 Construction Waste Management and Disposal
017700 Closeout Procedures
017823 Operation and Maintenance Data
017839 Project Record Documents

DIVISION 02 – EXISTING CONDITIONS

024100 Demolition

DIVISION 03 – CONCRETE

033000 Cast-In-Place Concrete
033511 Concrete Floor Finishes

DIVISION 05 – METALS

051200 Structural Steel Framing
055305 Metal Gratings and Floor Plates

DIVISION 14 – EQUIPMENT

144500 Vehicle Lifts

DIVISION 22 – PLUMBING

220500 Common Work Results for Plumbing
221316 Sanitary Waste and Vent Piping

DIVISION 26 – ELECTRICAL

260500 Common Work Results
260519 Low-Voltage Conductors
260529 Hangers & Supports
260533 Raceway and Boxes
260553 Identification

DIVISION 31 – EARTHWORK

312316 Excavation
312323 Fill

APPENDIX A – LIFT INSTALLATION DRAWINGS

APPENDIX B – PRE-DESIGN UNDERGROUND ENVIRONMENTAL ASSESSMENT

END OF TABLE OF CONTENTS

DIVISION 00

DOCUMENT 001113 - ADVERTISEMENT FOR BIDS

1.1 PROJECT INFORMATION

A. Notice to Bidders: Bidders may submit bids for project as described in this Document. Submit bids according to the Instructions to Bidders.

1. Regulatory Requirements: G.L. c. 149 shall govern submittal, opening, and award of bids for General Contractors and Subcontractors.

B. Project Identification: PVTA UMass Lift Replacement.

1. PVTA IFB #26-012.
2. Project Location: UMass Transit Facility, 185 Holdsworth Way, Amherst MA 01002.

C. Owner: Pioneer Valley Transit Authority (PVTA), 2808 Main Street, Springfield, MA 01107

1. Owner's Representative: John Burke.
2. Procurement Officer: Leland Zak.
3. Construction Representative: Mike Lizee.

D. Design Consultant: Wendel WD Architecture, Engineering, Surveying & Landscape Architecture, PC. 375 Essjay Road, Suite 200, Williamsville, NY 14221

E. Project Description: The project consists of the removal of an existing hydraulic bus lift and replacement with a new hydraulic bus lift in the chassis wash bay at PVTA's UMass Transit facility. The project includes concrete work, plumbing and electrical. The new lift is Owner provided and Contractor installed.

F. Project Schedule: The construction schedule for this project is as follows:
1. Award of Contract: **April 15, 2026**
2. Notice to Proceed: **May 15, 2026**
3. Substantial Completion: **75 calendar days from Notice to Proceed**
4. Final Completion: **15 calendar days from Substantial Completion**

G. Construction Contract: Bids will be received for the following Work:

1. General Bid.

1.2 BID SUBMITTAL AND OPENING

A. Owner will receive sealed, lump sum General Bids until the bid time and date at the location given below. Owner will consider bids prepared in compliance with the Instructions to Bidders issued by Owner, and delivered as follows:

1. Bid Date: **April 7, 2026.**
2. Bid Time: 2:00 p.m., local time.

3. Location: PVTA, 2808 Main Street, Springfield, MA 01107.

B. Bids will be thereafter publicly opened and read aloud.

1.3 BID SECURITY

A. Bid security for all General Bids in the form of a bid bond, cash, certified check, treasurer's or cashier's check payable to the Owner shall be submitted with each bid in the amount of 5 percent of the bid amount including alternates. No bids may be withdrawn for a period of 30 days (Saturdays, Sundays and legal holidays excluded) after opening of bids. Owner reserves the right to reject any and all bids and to waive informalities and irregularities and to take any other action with respect to bids to the extent permitted by law.

1.4 PREBID MEETING

A. Prebid Meeting: A pre-bid meeting for all qualified bidders will be held at UMass Transit Facility, 185 Holdsworth Way, Amherst, MA 01002 on **March 24, 2026, at 10:00 a.m.,** local time. Although the meeting is not mandatory, prospective bidders are requested to attend, and will be deemed to know everything that could reasonably have been ascertained at such a meeting. Bidders will have an opportunity to view the site of the work following the pre-bid meeting.

B. Questions pertaining to the project shall be addressed to Leland Zak by email lzak@pvta.com.

1.5 DOCUMENTS

A. Online Procurement and Contracting Documents: Obtain access by visiting PVTA's Business Opportunities website: http://www.pvta.com/opportunities.php.

1.6 TIME OF COMPLETION

A. Successful bidder shall begin the Work on receipt of the Notice to Proceed and shall complete the Work within the Contract Time.

1.7 PERMITS

A. Each bidder shall include in their proposal all costs for permits as may be required for their portion of the work, including those required by the University of Massachusetts, Amherst campus. The Building Permit will be obtained and paid for by the General Contractor.

1.8 BIDDER'S QUALIFICATIONS

A. Bidders must be properly licensed under the laws governing their respective trades and be able to obtain insurance and bonds required for the Work.

B. A Performance Bond, and a separate Labor and Material Payment Bond, each in the amount at least equal to one hundred percent (100%), and a certificate of insurance in a form acceptable to Owner will be required of the successful Bidder.

C. All bids for this project are subject to applicable bidding laws of Massachusetts, including General Laws Chapter 149 as amended.

D. Prevailing Wage Rates as determined by the Commissioner of the Division of Occupational Safety of the Executive Office of Labor and Workforce Development under the provisions of the Massachusetts General Laws Chapter 149, Section 26 to 27D, as amended, apply to this project.

1.9 NOTIFICATION

A. This Advertisement for Bids document is issued by Pioneer Valley Transit Authority.

B. The contract will be awarded to the responsive, qualified bidder deemed by the awarding authority to be the lowest responsible and eligible bidder.

C. The Owner reserves the right to waive any informalities, to accept or reject, in whole or in part any or all bids, or take whatever other action may be deemed to be in the best interest of the Owner.

END OF DOCUMENT 001113

THIS PAGE INTENTIONALLY LEFT BLANK

DOCUMENT 002113 - INSTRUCTIONS TO BIDDERS

1.1 INSTRUCTIONS TO BIDDERS

A. AIA Document A701, "Instructions to Bidders," is hereby incorporated into the Procurement and Contracting Requirements. A copy of AIA Document A701, "Instructions to Bidders," is bound herein and immediately follows this page.

END OF DOCUMENT 002113

THIS PAGE INTENTIONALLY LEFT BLANK

DRAFT

AIA® Document A701® – 2018

Instructions to Bidders

for the following Project:
(Name, location, and detailed description)

«PVTA UMass Lift Replacement »
«UMass Transit Facility
185 Holdsworth Way »
«Amherst, MA 01002. »

THE OWNER:
(Name, legal status, address, and other information)

«Pioneer Valley Transit Authority (PVTA) »« »
«2808 Main Street »
«Springfield, MA 01107 »
« »

THE ARCHITECT:
(Name, legal status, address, and other information)

«Wendel WD Architecture, Engineering, Surveying & Landscape Architecture PC »« »
«375 Essjay Road, Suite 200 »
«Williamsville, NY 14221 »
« »

TABLE OF ARTICLES

1 DEFINITIONS

2 BIDDER'S REPRESENTATIONS

3 BIDDING DOCUMENTS

4 BIDDING PROCEDURES

5 CONSIDERATION OF BIDS

6 POST-BID INFORMATION

7 PERFORMANCE BOND AND PAYMENT BOND

8 ENUMERATION OF THE PROPOSED CONTRACT DOCUMENTS

ADDITIONS AND DELETIONS: The author of this document has added information needed for its completion. The author may also have revised the text of the original AIA standard form. An *Additions and Deletions Report* that notes added information as well as revisions to the standard form text is available from the author and should be reviewed.

This document has important legal consequences. Consultation with an attorney is encouraged with respect to its completion or modification.

FEDERAL, STATE, AND LOCAL LAWS MAY IMPOSE REQUIREMENTS ON PUBLIC PROCUREMENT CONTRACTS. CONSULT LOCAL AUTHORITIES OR AN ATTORNEY TO VERIFY REQUIREMENTS APPLICABLE TO THIS PROCUREMENT BEFORE COMPLETING THIS FORM.

It is intended that AIA Document G612™–2017, Owner's Instructions to the Architect, Parts A and B will be completed prior to using this document.

ELECTRONIC COPYING of any portion of this AIA® Document to another electronic file is prohibited and constitutes a violation of copyright laws as set forth in the footer of this document.

AIA Document A701 – 2018. Copyright © 1970, 1974, 1978, 1987, 1997 and 2018. All rights reserved. "The American Institute of Architects," "American Institute of Architects," "AIA," the AIA Logo, and "AIA Contract Documents" are trademarks of The American Institute of Architects. This draft was produced at 13:07:25 ET on 06/16/2023 under Order No.4104237337 which expires on 10/30/2023, is not for resale, is licensed for one-time use only, and may only be used in accordance with the AIA Contract Documents® Terms of Service. To report copyright violations, e-mail docinfo@aiacontracts.com.
User Notes: (1765034062)

ARTICLE 1 DEFINITIONS

§ 1.1 Bidding Documents include the Bidding Requirements and the Proposed Contract Documents. The Bidding Requirements consist of the advertisement or invitation to bid, Instructions to Bidders, supplementary instructions to bidders, the bid form, and any other bidding forms. The Proposed Contract Documents consist of the unexecuted form of Agreement between the Owner and Contractor and that Agreement's Exhibits, Conditions of the Contract (General, Supplementary and other Conditions), Drawings, Specifications, all Addenda, and all other documents enumerated in Article 8 of these Instructions.

§ 1.2 Definitions set forth in the General Conditions of the Contract for Construction, or in other Proposed Contract Documents apply to the Bidding Documents.

§ 1.3 Addenda are written or graphic instruments issued by the Architect, which, by additions, deletions, clarifications, or corrections, supplement, modify or interpret the Bidding Documents.

§ 1.4 A Bid is a complete and properly executed proposal to do the Work for the sums stipulated therein, submitted in accordance with the Bidding Documents.

§ 1.5 The Base Bid is the sum stated in the Bid for which the Bidder offers to perform the Work described in the Bidding Documents, to which Work may be added or from which Work may be deleted by sums stated in Alternate Bids.

§ 1.6 An Alternate Bid (or Alternate) is an amount stated in the Bid to be added to or deducted from, or that does not change, the Base Bid if the corresponding change in the Work, as described in the Bidding Documents for the Alternate, is accepted.

§ 1.7 A Unit Price is an amount stated in the Bid as a price per unit of measurement for materials, equipment, or services, or a portion of the Work, as described in the Bidding Documents.

§ 1.8 A Bidder is a person or entity who submits a Bid and who meets the requirements set forth in the Bidding Documents.

§ 1.9 A Sub-bidder is a person or entity defined in G.L. c.149, § 44F, who submits a bid to a Bidder for materials, equipment, or labor for a portion of the Work.

ARTICLE 2 BIDDER'S REPRESENTATIONS

§ 2.1 By submitting a Bid, the Bidder represents that:

- **.1** the Bidder has read and understands the Bidding Documents;
- **.2** the Bidder understands how the Bidding Documents relate to other portions of the Project, if any, being bid concurrently or presently under construction;
- **.3** the Bid complies with the Bidding Documents;
- **.4** the Bidder has visited the site, become familiar with local conditions under which the Work is to be performed, and has correlated the Bidder's observations with the requirements of the Proposed Contract Documents;
- **.5** the Bid is based upon the materials, equipment, and systems required by the Bidding Documents without exception; and
- **.6** the Bidder has read and understands the provisions for liquidated damages, if any, set forth in the form of Agreement between the Owner and Contractor.

ARTICLE 3 BIDDING DOCUMENTS

§ 3.1 Distribution

§ 3.1.1 Bidders shall obtain complete Bidding Documents, as indicated below, from the issuing office designated in the advertisement or invitation to bid, for the deposit sum, if any, stated therein.
(Indicate how, such as by email, website, host site/platform, paper copy, or other method Bidders shall obtain Bidding Documents.)

« »

AIA Document A701 – 2018. Copyright © 1970, 1974, 1978, 1987, 1997 and 2018. All rights reserved. "The American Institute of Architects," "American Institute of Architects," "AIA," the AIA Logo, and "AIA Contract Documents" are trademarks of The American Institute of Architects. This draft was produced at 13:07:25 ET on 06/16/2023 under Order No.4104237337 which expires on 10/30/2023, is not for resale, is licensed for one-time use only, and may only be used in accordance with the AIA Contract Documents® Terms of Service. To report copyright violations, e-mail docinfo@aiacontracts.com.
User Notes: (1765034062)

§ 3.1.2 Except as otherwise provided in G.L. c.149, §§ 44A-44H, any required deposit shall be refunded to Bidders who submit a bona fide Bid and return the paper Bidding Documents in good condition within ten days after receipt of Bids. The cost to replace missing or damaged paper documents will be deducted from the deposit. A Bidder receiving a Contract award may retain the paper Bidding Documents, and the Bidder's deposit will be refunded.

§ 3.1.3 Bidding Documents will not be issued directly to Sub-bidders unless specifically offered in the advertisement or invitation to bid, or in supplementary instructions to bidders, or as required by G.L. c.149, §§ 44A-44H.

§ 3.1.4 Bidders shall use complete Bidding Documents in preparing Bids. Neither the Owner nor Architect assumes responsibility for errors or misinterpretations resulting from the use of incomplete Bidding Documents.

§ 3.1.5 The Bidding Documents will be available for the sole purpose of obtaining Bids on the Work. No license or grant of use is conferred by distribution of the Bidding Documents.

§ 3.2 Modification or Interpretation of Bidding Documents

§ 3.2.1 The Bidder shall carefully study the Bidding Documents, shall examine the site and local conditions, and shall notify the Architect of errors, inconsistencies, or ambiguities discovered and request clarification or interpretation pursuant to Section 3.2.2.

§ 3.2.2 Requests for clarification or interpretation of the Bidding Documents and notification of errors, inconsistencies, or ambiguities discovered in the Bidding Documents shall be submitted by the Bidder in writing and shall be received by the Architect at least seven days prior to the date for receipt of Bids.
(Indicate how, such as by email, website, host site/platform, paper copy, or other method Bidders shall submit requests for clarification and interpretation.)

« Email to Leland Zak lzak@pvta.com »

§ 3.2.3 Modifications and interpretations of the Bidding Documents shall be made, in the discretion of the Owner, by Addendum. Modifications and interpretations of the Bidding Documents made in any other manner shall not be binding, and Bidders shall not rely upon them.

§ 3.3 Substitutions

§ 3.3.1 The materials, products, and equipment described in the Bidding Documents establish a standard of required function, dimension, appearance, and quality to be met by any proposed substitution, subject to G.L. c.30, § 39M(b), regarding proposed equals.

§ 3.3.2 Substitution Process (Subject to G.L. c.30, § 39M(b)(2))

§ 3.3.2.1 Written requests for substitutions shall be received by the Architect at least ten days prior to the date for receipt of Bids. Requests shall be submitted in the same manner as that established for submitting clarifications and interpretations in Section 3.2.2.

§ 3.3.2.2 Bidders shall submit substitution requests on a Substitution Request Form if one is provided in the Bidding Documents.

§ 3.3.2.3 If a Substitution Request Form is not provided, requests shall include (1) the name of the material or equipment specified in the Bidding Documents; (2) the reason for the requested substitution; (3) a complete description of the proposed substitution including the name of the material or equipment proposed as the substitute, performance and test data, and relevant drawings; and (4) any other information necessary for an evaluation. The request shall include a statement setting forth changes in other materials, equipment, or other portions of the Work, including changes in the work of other contracts or the impact on any Project Certifications (such as LEED), that will result from incorporation of the proposed substitution.

§ 3.3.3 The burden of proof of the merit of the proposed substitution is upon the proposer. The Architect's decision of approval or disapproval of a proposed substitution shall be final.

§ 3.3.4 If the Architect approves a proposed substitution prior to receipt of Bids, such approval shall be set forth in an Addendum. Approvals made in any other manner shall not be binding, and Bidders shall not rely upon them.

AIA Document A701 – 2018. Copyright © 1970, 1974, 1978, 1987, 1997 and 2018. All rights reserved. "The American Institute of Architects," "American Institute of Architects," "AIA," the AIA Logo, and "AIA Contract Documents" are trademarks of The American Institute of Architects. This draft was produced at 13:07:25 ET on 06/16/2023 under Order No.4104237337 which expires on 10/30/2023, is not for resale, is licensed for one-time use only, and may only be used in accordance with the AIA Contract Documents® Terms of Service. To report copyright violations, e-mail docinfo@aiacontracts.com.
User Notes: (1765034062)

§ 3.3.5 No substitutions will be considered after the Contract award unless specifically provided for in the Contract Documents.

§ 3.4 Addenda

§ 3.4.1 Addenda will be transmitted to Bidders known by the issuing office to have received complete Bidding Documents.

(Indicate how, such as by email, website, host site/platform, paper copy, or other method Addenda will be transmitted.)

« »

§ 3.4.2 Addenda will be available where Bidding Documents are on file.

§ 3.4.3 Addenda will be issued no later than four days prior to the date for receipt of Bids, except an Addendum withdrawing the request for Bids or one which includes postponement of the date for receipt of Bids.

§ 3.4.4 Notwithstanding the foregoing, Bidders are solely responsible to ensure that they have received all Addenda. Prior to submitting a Bid, each Bidder shall ascertain that the Bidder has received all Addenda issued, and the Bidder shall acknowledge their receipt in the Bid.

ARTICLE 4 BIDDING PROCEDURES

§ 4.1 Preparation of Bids (Subject to G.L. c.149, §§ 44E-44H)

§ 4.1.1 Bids shall be submitted on the forms included with or identified in the Bidding Documents.

§ 4.1.2 All blanks on the bid form shall be legibly executed. Paper bid forms shall be executed in a non-erasable medium.

§ 4.1.3 Sums shall be expressed in both words and numbers, unless noted otherwise on the bid form. In case of discrepancy, the amount entered in words shall govern.

§ 4.1.4 Edits to entries made on paper bid forms must be initialed by the signer of the Bid.

§ 4.1.5 All requested Alternates shall be bid. If no change in the Base Bid is required, enter "No Change" or as required by the bid form.

§ 4.1.6 Where two or more Bids for designated portions of the Work have been requested, the Bidder may, without forfeiture of the bid security, state the Bidder's refusal to accept award of less than the combination of Bids stipulated by the Bidder. The Bidder shall neither make additional stipulations on the bid form nor qualify the Bid in any other manner.

§ 4.1.7 Each copy of the Bid shall state the legal name and legal status of the Bidder. As part of the documentation submitted with the Bid, the Bidder shall provide evidence of its legal authority to perform the Work in the jurisdiction where the Project is located. Each copy of the Bid shall be signed by the person or persons legally authorized to bind the Bidder to a contract. A Bid by a corporation shall further name the state of incorporation and have the corporate seal affixed. A Bid submitted by an agent shall have a current power of attorney attached, certifying the agent's authority to bind the Bidder.

§ 4.1.8 A Bidder shall incur all costs associated with the preparation of its Bid.

§ 4.2 Bid Security

§ 4.2.1 Each Bid shall be accompanied by the following bid security:

(Insert the form and amount of bid security.)

«Subject to G.L. c.149, § 44B, Bid security for all General Bids in the form of a bid bond, cash, certified check, treasurer's or cashier's check payable to the Owner shall be submitted with each bid in the amount of 5 percent of the bid amount including alternates. »

AIA Document A701 – 2018. Copyright © 1970, 1974, 1978, 1987, 1997 and 2018. All rights reserved. "The American Institute of Architects," "American Institute of Architects," "AIA," the AIA Logo, and "AIA Contract Documents" are trademarks of The American Institute of Architects. This draft was produced at 13:07:25 ET on 06/16/2023 under Order No.4104237337 which expires on 10/30/2023, is not for resale, is licensed for one-time use only, and may only be used in accordance with the AIA Contract Documents® Terms of Service. To report copyright violations, e-mail docinfo@aiacontracts.com.
User Notes: (1765034062)

§ 4.2.2 The Bidder pledges to enter into a Contract with the Owner on the terms stated in the Bid and shall furnish bonds covering the faithful performance of the Contract and payment of all obligations arising thereunder. Should the Bidder refuse to enter into such Contract or fail to furnish such bonds if required, the amount of the bid security shall be forfeited to the Owner as liquidated damages, not as a penalty.

§ 4.2.3 If a surety bond is required as bid security, it shall be written on AIA Document A310™, Bid Bond, unless otherwise provided in the Bidding Documents. The attorney-in-fact who executes the bond on behalf of the surety shall affix to the bond a certified and current copy of an acceptable power of attorney. The Bidder shall provide surety bonds from a company or companies lawfully authorized to issue surety bonds in the jurisdiction where the Project is located and satisfactory to the Owner.

§ 4.2.4 Except as otherwise provided by G.L. c.149, § 44B, the Owner will have the right to retain the bid security of Bidders to whom an award is being considered until (a) the Contract has been executed and bonds have been furnished; (b) the specified time has elapsed so that Bids may be withdrawn; or (c) all Bids have been rejected. However, if no Contract has been awarded, a Bidder may, beginning« 30 »days (Saturdays, Sundays and legal holidays excluded) after the opening of Bids, withdraw its Bid and request the return of its bid security.

§ 4.3 Submission of Bids

§ 4.3.1 A Bidder shall submit its Bid as indicated below:
(Indicate how, such as by website, host site/platform, paper copy, or other method Bidders shall submit their Bid.)

«Two (2) paper copies. »

§ 4.3.2 Paper copies of the Bid, the bid security, and any other documents required to be submitted with the Bid shall be enclosed in a sealed opaque envelope. The envelope shall be addressed to the party receiving the Bids and shall be identified with the Project name, the Bidder's name and address, and, if applicable, the designated portion of the Work for which the Bid is submitted. If the Bid is sent by mail, the sealed envelope shall be enclosed in a separate mailing envelope with the notation "SEALED BID ENCLOSED" on the face thereof.

§ 4.3.3 Bids shall be submitted by the date and time and at the place indicated in the invitation to bid. Bids submitted after the date and time for receipt of Bids, or at an incorrect place, will not be accepted.

§ 4.3.4 The Bidder shall assume full responsibility for timely delivery at the location designated for receipt of Bids.

§ 4.3.5 A Bid submitted by any method other than as provided in this Section 4.3 will not be accepted.

§ 4.4 Modification or Withdrawal of Bid

§ 4.4.1 Prior to the date and time designated for receipt of Bids, a Bidder may submit a new Bid to replace a Bid previously submitted, or withdraw its Bid entirely, by notice to the party designated to receive the Bids. Such notice shall be received and duly recorded by the receiving party before the date and time set for receipt of Bids. The receiving party shall verify that replaced or withdrawn Bids are removed from the other submitted Bids and not considered. Notice of submission of a replacement Bid or withdrawal of a Bid shall be worded so as not to reveal the amount of the original Bid.

§ 4.4.2 Withdrawn Bids may be resubmitted up to the date and time designated for the receipt of Bids in the same format as that established in Section 4.3, provided they fully conform with these Instructions to Bidders. Bid security shall be in an amount sufficient for the Bid as resubmitted.

§ 4.4.3 After the date and time designated for receipt of Bids, a Bidder who discovers that it made a clerical error in its Bid under G.L. c.149, § 44B(3)-(4) shall notify the Architect of such error within two days, or pursuant to a timeframe specified by the law of the jurisdiction where the Project is located, requesting withdrawal of its Bid. Upon providing evidence of such error to the satisfaction of the Owner, the Bid shall be withdrawn and not resubmitted.

« »

AIA Document A701 – 2018. Copyright © 1970, 1974, 1978, 1987, 1997 and 2018. All rights reserved. "The American Institute of Architects," "American Institute of Architects," "AIA," the AIA Logo, and "AIA Contract Documents" are trademarks of The American Institute of Architects. This draft was produced at 13:07:25 ET on 06/16/2023 under Order No.4104237337 which expires on 10/30/2023, is not for resale, is licensed for one-time use only, and may only be used in accordance with the AIA Contract Documents® Terms of Service. To report copyright violations, e-mail docinfo@aiacontracts.com.
User Notes: (1765034062)

ARTICLE 5 CONSIDERATION OF BIDS

§ 5.1 Opening of Bids

Bids properly identified and received within the specified time limits will be publicly opened and read aloud. A summary of the Bids may be made available to Bidders.

§ 5.2 Rejection of Bids

Unless otherwise prohibited by law, the Owner shall have the right to reject any or all Bids.

§ 5.3 Acceptance of Bid (Award)

§ 5.3.1 It is the intent of the Owner to award a Contract to the lowest responsive, responsible and eligible Bidder, provided the Bid has been submitted in accordance with the requirements of the Bidding Documents. Unless otherwise prohibited by law, the Owner shall have the right to waive informalities and irregularities in a Bid received and to accept the Bid which, in the Owner's judgment, is in the Owner's best interests.

§ 5.3.2 Owner shall have the right to accept Alternates in the order in which they appear in the Bidding Documents, and to determine the lowest responsive and responsible Bidder on the basis of the sum of the Base Bid and Alternates accepted.

ARTICLE 6 POST-BID INFORMATION

§ 6.1 Contractor's Qualification Statement

Bidders to whom award of a Contract is under consideration shall submit to the Architect, upon request and within the timeframe specified by the Architect, a properly executed AIA Document A305™, Contractor's Qualification Statement, unless such a Statement has been previously required and submitted for this Bid.

§ 6.2 Intentionally Omitted.

§ 6.3 Submittals

§ 6.3.1 After notification of selection for the award of the Contract, the Bidder shall, as soon as practicable or as stipulated in the Bidding Documents, submit in writing to the Owner through the Architect:

.1 a designation of the Work to be performed with the Bidder's own forces;

.2 names of the principal products and systems proposed for the Work and the manufacturers and suppliers of each; and

.3 names of persons or entities (including those who are to furnish materials or equipment fabricated to a special design but excluding filed sub-bidders) proposed for the principal portions of the Work.

§ 6.3.2 The Bidder may be required to establish to the satisfaction of the Architect and Owner the reliability and responsibility of the persons or entities proposed to furnish and perform the Work described in the Bidding Documents.

ARTICLE 7 PERFORMANCE BOND AND PAYMENT BOND

§ 7.1 Bond Requirements

§ 7.1.1 The Bidder shall furnish bonds covering the faithful performance of the Contract and payment of all obligations arising thereunder as required by G.L. c.149.

§ 7.1.2 The cost of such bonds shall be deemed included in the Bid.

§ 7.1.3 The Bidder shall provide surety bonds from a company or companies lawfully authorized to issue surety bonds in the jurisdiction where the Project is located and satisfactory to the Owner.

§ 7.1.4 Unless otherwise indicated below, the Penal Sum of the Payment and Performance Bonds shall be the amount of the Contract Sum.

(If Payment or Performance Bonds are to be in an amount other than 100% of the Contract Sum, indicate the dollar amount or percentage of the Contract Sum.)

« »

AIA Document A701 – 2018. Copyright © 1970, 1974, 1978, 1987, 1997 and 2018. All rights reserved. "The American Institute of Architects," "American Institute of Architects," "AIA," the AIA Logo, and "AIA Contract Documents" are trademarks of The American Institute of Architects. This draft was produced at 13:07:25 ET on 06/16/2023 under Order No.4104237337 which expires on 10/30/2023, is not for resale, is licensed for one-time use only, and may only be used in accordance with the AIA Contract Documents® Terms of Service. To report copyright violations, e-mail docinfo@aiacontracts.com.
User Notes: (1765034062)

§ 7.2 Time of Delivery and Form of Bonds

§ 7.2.1 The Bidder shall deliver the required bonds to the Owner not later than five days (Saturdays, Sundays and legal holidays excluded) following the date of presentment of the Contract for execution. If the Work is to commence sooner in response to a letter of intent, the Bidder shall, prior to commencement of the Work, submit evidence satisfactory to the Owner that such bonds will be furnished and delivered in accordance with this Section 7.2.1.

§ 7.2.2 Unless otherwise provided, the payment bond shall be written on AIA Document A312, Payment Bond, and the performance bond shall be on the firm included in the Bidding Documents.

§ 7.2.3 The bonds shall be dated on or after the date of the Contract.

§ 7.2.4 The Bidder shall require the attorney-in-fact who executes the required bonds on behalf of the surety to affix to the bond a certified and current copy of the power of attorney.

ARTICLE 8 ENUMERATION OF THE PROPOSED CONTRACT DOCUMENTS

§ 8.1 Copies of the proposed Contract Documents have been made available to the Bidder and consist of the following documents:

.1 AIA Document A101™–2017, Standard Form of Agreement Between Owner and Contractor, unless otherwise stated below.
(Insert the complete AIA Document number, including year, and Document title.)

« »

.2 AIA Document A101™–2017, Exhibit A, Insurance and Bonds, unless otherwise stated below.
(Insert the complete AIA Document number, including year, and Document title.)

« »

.3 AIA Document A201™–2017, General Conditions of the Contract for Construction, unless otherwise stated below.
(Insert the complete AIA Document number, including year, and Document title.)

« »

.4

.5 Drawings

Number	Title	Date

.6 Specifications

Section	Title	Date	Pages

.7
.8

Title	Date	Pages

[« X »] Supplementary and other Conditions of the Contract:

Document	Title	Date	Pages
Supplementary Conditions			

AIA Document A701 – 2018. Copyright © 1970, 1974, 1978, 1987, 1997 and 2018. All rights reserved. "The American Institute of Architects," "American Institute of Architects," "AIA," the AIA Logo, and "AIA Contract Documents" are trademarks of The American Institute of Architects. This draft was produced at 13:07:25 ET on 06/16/2023 under Order No.4104237337 which expires on 10/30/2023, is not for resale, is licensed for one-time use only, and may only be used in accordance with the AIA Contract Documents® Terms of Service. To report copyright violations, e-mail docinfo@aiacontracts.com.
User Notes: (1765034062)

.9 Other documents listed below:
(List here any additional documents that are intended to form part of the Proposed Contract Documents.)

«The Bidding Documents »

DRAFT

AIA Document A701 – 2018. Copyright © 1970, 1974, 1978, 1987, 1997 and 2018. All rights reserved. "The American Institute of Architects," "American Institute of Architects," "AIA," the AIA Logo, and "AIA Contract Documents" are trademarks of The American Institute of Architects. This draft was produced at 13:07:25 ET on 06/16/2023 under Order No.4104237337 which expires on 10/30/2023, is not for resale, is licensed for one-time use only, and may only be used in accordance with the AIA Contract Documents® Terms of Service. To report copyright violations, e-mail docinfo@aiacontracts.com.
User Notes: (1765034062)

APPENDIX 002113A – PVTA PROTEST PROCEDURES

1.1 GENERAL

A. This procedure is applicable to all procurements in excess of $100,000. Protests for procurements of less than $100,000 shall be informally handled by the Procurement Department.

1.2 DEFINITIONS

A. "Interested Party" means an actual or prospective bidder or offeror whose direct economic interest would be affected by the award of a contract or by the failure to award a contract. It does not include subcontractors or potential subcontractors.

B. All "days" referred to are deemed to be normal business days. Except as otherwise provided, in computing a period of time prescribed by these regulations, the day from which the designated period of time begins to run shall not be counted, but the last day of the period shall be counted unless that day is not a normal business day, in which event the period shall include the next working day. Time for filing any document or copy thereof with the Authority expires at 4:30 p.m. Eastern Standard Time or Eastern Daylight Savings Time, as applicable on the last day on which such filing may be made.

C. "Adverse agency action" is any action or inaction on the part of the Authority which is prejudicial to the position taken in a protest filed with the Authority. It may include but is not limited to: a decision on the merits of a protest; a procurement action such as the opening of bids or receipt of proposals, the award of a contract, or the rejection of a bid despite the pendency of a protest; or the Authority acquiescence in and active support of continued and substantial contract performance.

1.3 FILING OF PROTEST

A. An interested party may protest to the Authority a solicitation issued by the Authority for the procurement of property or services, or the proposed award or the award of such a contract.

B. Protest must be in writing and addressed as follows: Leland Zak, Procurement Officer, PVTA, 2808 Main Street, Springfield, MA 01107.

C. The protester shall furnish two complete copies of the protest to the Procurement Officer, addressed as stated above.

D. A protest filed with the Authority shall:

1. Include the name, address and telephone number of the protester;
2. Include an original signed by the protester or its representative;
3. Identify the solicitation and purchase order number;

4. Set forth a detailed statement of the legal and factual grounds of protest, including copies of relevant documents; and,
5. State the form of relief requested.

E. No formal briefs or other technical forms of pleading or motion are required. Protest submissions should be concise, logically arranged, and clearly state legally sufficient grounds of protest.

F. A protest filed with the Authority may be dismissed for failure to comply with any of the requirements of this section.

1.4 TIME OF FILING

A. Protests based upon alleged improprieties in a solicitation which are apparent prior to bid opening or the closing date for receipt of initial proposals shall be filed prior to bid opening or the closing date for receipt of initial proposals. In procurements where proposals are requested, alleged improprieties which do not exist in the initial solicitation, but which are subsequently incorporated into the solicitation, must be protested not later than the next closing date for receipt of proposals following the incorporation.

1. In cases other than those covered above, protests shall be filed not later than 5 days after the basis of protest is known or should have been known, while within 5 days prior to the date specified for a bid opening of an IFB or for the due date for filing a response for RFP's.

B. The term "filed" regarding protests to PVTA means receipt of the protest submission in PVTA's Procurement Department.

C. PVTA, for good cause shown, or where it determines that a protest raises issues significant to the procurement system, may consider any protest which is not filed timely.

1.5 NOTICE OF PROTEST, SUBMISSION OF AUTHORITY REPORT AND TIME FOR FILING OF COMMENTS ON REPORT

A. The Procurement Officer shall promptly give notice of the protest to the contractor if award has been made or, if no award has been made, to all bidders or offerors who appear to have a substantial and reasonable prospect of receiving an award if the protest is denied. The Procurement Officer shall furnish copies of the protest submissions to such parties, if requested to do so in writing. In addition, if a contract will be paid in part with funding from the FTA, then the FTA Region I office shall be notified in writing of the protest.

B. Material submitted by a protester will not be withheld from any interested party outside the Authority which may be involved in the protest except to the extent that the withholding of information is permitted or required by law or regulation. If the protester considers that the protest contains material which should be withheld, a statement advising of this fact must be affixed to the front page of the protest submission and the allegedly protected information must be so identified whenever it appears.

C. Protests shall be reviewed by a panel consisting of representatives of Legal, the Procurement Officer and appropriate technical and other staff. Such review panel shall be chaired by the Procurement Officer or by a designee, as authorized in writing.

D. Documents that will be included in the review will consist of the protest, the bid or proposal submitted by the protester, the solicitation, including the specifications or portions relevant to the protest, the abstract of bids or offers or relevant portions, any other documents that are relevant to the protest, or any additional evidence or information deemed necessary in determining the validity of the protest. Following final review, the Procurement Officer will furnish a copy of the report to the protester and interested parties who have responded to the notice.

E. Comments on the report shall be filed by the protester and interested parties with the Procurement Officer within 5 days after receipt of the report. Failure of the protester to file comments, or to file a statement requesting that the case be decided on the existing record, or to request an extension under this section within the 5-day period will result in dismissal of the protest.

F. Notwithstanding any other provision of this procedure, when on its face a protest does not state a valid basis for protest or is untimely, the Procurement Officer may summarily dismiss the protest. Among the protests which may be dismissed without consideration of the merits are those concerning the following:

1. PVTA's Purchasing Regulations and Procedures.
2. Contract Administration.
3. Affirmative Determination of Responsibility by the Procurement Officer. Because the determination that a bidder or offeror is capable of performing a contract is based in large measure on subjective judgments which generally are not readily susceptible of reasoned review, an affirmative determination of responsibility will not be reviewed,
absent a showing that such determination was made fraudulently or in bad faith or that definitive responsibility crite1ia in the solicitation were not met.
4. Determinations by the Authority of "minor informalities" in bids or proposals which can be waived by the Authority, absent a showing that such determination was made fraudulently or in bad faith or that definitive responsiveness criteria in the solicitation were not met.
5. Affirmative determination by the Authority that a bid or proposal is responsive to the Authority's specifications, absent a showing that such determination was made fraudulently or in bad faith or that definitive specification criteria in the solicitation were not met.
6. Protests not filed within the time limits set forth above.
7. Subcontractor Protests. The Authority will not consider subcontractor protests.
8. Judicial proceedings. The Authority will not consider protests where the matter involved is the subject of litigation before a court of competent jurisdiction, unless the court requests a decision by the Authority in accordance with these procedures. The Authority will not consider protests where the matter involved has been decided on the merits by a court of competent jurisdiction.

1.6 WITHHOLDING OF AWARD AND SUSPENSION OF CONTRACT PERFORMANCE

A. When the Authority receives notice of a protest prior to award of a contract it may not award a contract under the protested procurement while the protest is pending unless the Procurement Officer determines in writing that urgent and compelling circumstances significantly affecting interests of PVTA will not permit waiting for the protest decision.

1.7 CONFERENCE MEETING

A. A conference meeting on the merits of the protest may, at the sole discretion of the review panel, be held at the request of the protester or interested parties who have responded to the notice given above. Requests for a conference should be made at the earliest possible time in the protest proceeding.

B. Conferences will be held on a date set by the review panel no later than 5 days after receipt by the protester and interested parties of the review panel report. All interested parties shall be invited to attend. Ordinarily, only one conference will be held on a protest.

C. If any party refuses to attend such a conference, or a witness fails to attend or fails to answer

D. a relevant question, the review panel may draw an inference unfavorable to the party refusing to cooperate.

E. The review panel may request that a conference be held if at any time during the protest proceeding it decides that such a conference is needed to clarify material issues. If such a conference is held the review panel shall make such adjustments in the submission deadlines as it determines to be fair to all parties.

F. Failure of the protester to file comments, or to file a statement requesting that the case be decided on the existing record will result in dismissal of the protest.

1.8 REMEDIES

A. If the review panel determines that a solicitation or proposed award does not comply with statute or regulation, it shall recommend that the Authority implement any combination of the following remedies which it deems appropriate under the circumstances:

1. Refrain from exercising options under the contract;
2. Recomplete the contract;
3. Issue a new solicitation;
4. Award a contract consistent with statute and regulation; or
5. Such other recommendations as the Procurement Officer determines necessary to promote compliance.

B. In determining the appropriate recommendation, the review panel shall consider all the circumstances surrounding the procurement or proposed procurement including, but not limited to, the seriousness of the procurement deficiency, the degree of prejudice to other interested parties or to the integrity of the competitive procurement system, the good faith of the parties,

the extent of performance, cost to the Authority, the urgency of the procurement and the impact of the recommendation on the Authority's mission.

1.9 TIME FOR DECISION BY THE AUTHORITY'S REVIEW PANEL

A. The review panel shall issue a final decision on a protest within 60 days from the date the protest is filed with it. The determination of PVTA regarding a protest will be final.

1.10 FTA INVOLVEMENT

A. FTA Circular 4220.l F provides the following advice regarding appeals from the Authority's determination:

...A protester must exhaust all administrative remedies with the grantee (Authority) before pursuing a protest with FTA. Review of protests by FTA will be limited to a grantee's failure to have or follow its protest procedures, or its failure to review a complaint or protest. An appeal to the FTA must be received by the cognizant FTA regional or Headquarters Office within five (5) working days of the date the protestor knew or should have known of the violation.

Violations of Federal law or regulation will be handled by the complaint process stated in that law or regulation. Violations of State or local law or regulations will be under the jurisdiction of State or local authorities.

END OF APPENDIX 002113A

THIS PAGE INTENTIONALLY LEFT BLANK

DOCUMENT 002213 - SUPPLEMENTARY INSTRUCTIONS TO BIDDERS

1.1 INSTRUCTIONS TO BIDDERS

A. Instructions to Bidders for Project consist of the following:

1. AIA Document A701, "Instructions to Bidders" a copy of which is bound in this Project Manual.
2. The following Supplementary Instructions to Bidders that modify and add to the requirements of the Instructions to Bidders.

1.2 SUPPLEMENTARY INSTRUCTIONS TO BIDDERS, GENERAL

A. The following supplements modify AIA Document A701, "Instructions to Bidders." Where a portion of the Instructions to Bidders is modified or deleted by these Supplementary Instructions to Bidders, unaltered portions of the Instructions to Bidders shall remain in effect.

1.3 ARTICLE 2 - BIDDER'S REPRESENTATIONS

A. Add Section 2.1.7:

1. 2.1.7 - The Bidder has investigated all required fees, permits, and regulatory requirements of authorities having jurisdiction and has properly included in the submitted bid the cost of such fees, permits, and requirements not otherwise indicated as provided by Owner.

B. Add Section 2.1.8:

1. 2.1.8 - The Bidder is a properly licensed Contractor according to the laws and regulations of the Commonwealth of Massachusetts and meets qualifications indicated in the Procurement and Bidding Documents.

C. Add Section 2.1.9:

1. 2.1.9 - The Bidder has incorporated into the Bid adequate sums for work performed by installers whose qualifications meet those indicated in the Procurement and Contracting Documents.

1.4 ARTICLE 3 - BIDDING DOCUMENTS

A. 3.1 – Copies

1. Delete Section 3.1.1 and insert the following:

a. Qualified Bidders may obtain complete electronic sets of the Bidding Documents from PVTA's Business Opportunities website: http://www.pvta.com/opportunities.php.

2. Delete Section 3.1.2.

B. 3.2 – Modification or Interpretation of Bidding Documents:

1. Delete Section 3.2.2 and insert the following:

a. Bidders and Sub-bidders requiring clarification or interpretation of the Bidding Documents shall make a written request which shall reach PVTA's Procurement Officer at lzak@pvta.com by **March 31, 2026, at 5:00 p.m. local time**.

C. 3.4 - Addenda:

1. Delete Section 3.4.3 and replace with the following:

a. 3.4.3 - Addenda will be issued on or before **April 3, 2026** for general contractor bids except an Addendum withdrawing the request for Bids or one which includes postponement of the date for receipt of Bids.

2. Add Section 3.4.4.1:

a. 3.4.4.1 - Owner may elect to waive the requirement for acknowledging receipt of 3.4.4 Addenda as follows:

1) 3.4.4.1.1 - Information received as part of the Bid indicates that the Bid, as submitted, reflects modifications to the Procurement and Contracting Documents included in an unacknowledged Addendum.
2) 3.4.4.1.2 - Modifications to the Procurement and Contracting Documents in an unacknowledged Addendum do not, in the opinion of Owner, affect the Contract Sum or Contract Time or scope of the bidder's work.

1.5 ARTICLE 4 - BIDDING PROCEDURES

A. 4.1 - Preparation of Bids:

1. Add Section 4.1.1.1:

a. 4.1.1.1 - Printable electronic Bid Forms and related documents are available from Architect.

2. Add Section 4.1.8:

a. 4.1.8 - The Bid shall include unit prices when called for by the Procurement and Bidding Documents. Unit prices will be incorporated into the Contract.

3. Add Section 4.1.9:

a. 4.1.9 - Owner may elect to disqualify a bid due to failure to submit a bid in the form requested, failure to bid requested alternates or unit prices, failure to complete entries in all blanks in the Bid Form, or inclusion by the Bidder of any alternates, conditions, limitations, or provisions not called for, and/or as otherwise allowed by law.

B. 4.3 - Submission of Bids:

1. Add Section 4.3.1.2:

a. 4.3.1.2 - Include Bidder's Contractor License Number applicable in Project jurisdiction on the face of the sealed bid envelope.

C. 4.4 - Modification or Withdrawal of Bids:

1. Add the following sections to 4.4.2:

a. 4.4.2.1 - Such modifications to or withdrawal of a bid may only be made by persons authorized to act on behalf of the Bidder. Authorized persons are those so identified in the Bidder's corporate bylaws, specifically empowered by the Bidder's charter or similar legally binding document acceptable to Owner, or by a power of attorney, signed and dated, describing the scope and limitations of the power of attorney. Make such documentation available to Owner at the time of seeking modifications or withdrawal of the Bid.

1.6 ARTICLE 6 - POSTBID INFORMATION

A. 6.1 - Contractor's Qualification Statement:

1. Delete Section 6.1.1:

B. 6.3 - Submittals:

1. Add Section 6.3.1.4:

a. 6.3.1.4 - Submit information requested in Sections 6.3.1.1, 6.3.1.2, and 6.3.1.3 no later than **two** business days following Architect's request.

1.7 ARTICLE 7 - PERFORMANCE BOND AND PAYMENT BOND

A. 7.1 - Bond Requirements:

1. Add Section 7.1.1.1:

a. 7.1.1.1 - Both a Performance Bond and a Payment Bond will be required, each in an amount equal to 100 percent of the Contract Sum.

B. 7.2 - Time of Delivery and Form of Bonds:

1. Delete the first sentence of Section 7.2.1 and insert the following:

a. The Bidder shall deliver the required bonds to Owner no later than **5** days (Saturdays, Sundays and legal holidays excluded) after the date of Notice of Award and no later than the date of execution of the Contract, whichever occurs first. Owner may deem the failure of the Bidder to deliver required bonds within the period of time allowed a default.

2. Delete Section 7.2.3 and insert the following:

a. 7.2.3 - Bonds shall be executed and be in force on the date of the execution of the Contract.

1.8 ARTICLE 8 - FORM OF AGREEMENT BETWEEN OWNER AND CONTRACTOR

A. A101-2017 as edited and bound in this Project Manual.

1.9 ARTICLE 9 - EXECUTION OF THE CONTRACT

A. Add Article 9:

1. 9.1.1 - Subsequent to the Notice of Intent to Award, and within **5** days (Saturdays, Sundays and legal holidays excluded) after the prescribed Form of Agreement is presented to the Awardee for signature, the Awardee shall execute and deliver the Agreement to Owner through **Architect** in such number of counterparts as Owner may require.
2. 9.1.2 - Owner may deem as a default the failure of the Awardee to execute the Contract and to supply the required bonds when the Agreement is presented for signature within the period of time allowed.
3. 9.1.3 - Unless otherwise indicated in the Procurement and Contracting Documents or the executed Agreement, the date of commencement of the Work shall be the date of the Notice to Proceed.
4. 9.1.4 - In the event of a default, Owner may declare the amount of the Bid security forfeited and elect to either award the Contract to the next responsible bidder or re-advertise for bids.

1.10 ARTICLE 10 TIME FOR COMPLETION

A. Add Article 10:

1. 1. Substantial Completion: The date for Substantial Completion shall be **75** calendar days from Notice to Proceed.
2. Final Completion: The date for Final Completion shall be **15** calendar days after the date of Substantial Completion.

END OF DOCUMENT 002213

DOCUMENT 002600 - PROCUREMENT SUBSTITUTION PROCEDURES

1.1 DEFINITIONS

A. Procurement Substitution Requests: Requests for changes in products, materials, equipment, and methods of construction from those indicated in the Procurement and Contracting Documents, submitted prior to receipt of bids.

B. Substitution Requests: Requests for changes in products, materials, equipment, and methods of construction from those indicated in the Contract Documents, submitted following Contract award. See Section 012500 "Substitution Procedures" for conditions under which Substitution requests will be considered following Contract award.

1.2 QUALITY ASSURANCE

A. Compatibility of Substitutions: Investigate and document compatibility of proposed substitution with related products and materials. Engage a qualified testing agency to perform compatibility tests recommended by manufacturers.

1.3 PROCUREMENT SUBSTITUTIONS

A. Procurement Substitutions, General: By submitting a bid, the Bidder represents that its bid is based on materials and equipment described in the Procurement and Contracting Documents, including Addenda. Bidders are encouraged to request approval of qualifying substitute materials and equipment when the Specifications Sections list materials and equipment by product or manufacturer name.

B. Procurement Substitution Requests will be received and considered by Owner when the following conditions are satisfied, as determined by Architect; otherwise requests will be returned without action: An item shall be considered equal to the item so named or described if, in the opinion of the awarding authority: (1) it is at least equal in quality, durability, appearance, strength and design, (2) it will perform at least equally the function imposed by the general design for the public work being contracted for or the material being purchased, and (3) it conforms substantially, even with deviations, to the detailed requirements for the item in the said specifications.

1.4 SUBMITTALS

A. Procurement Substitution Request: Submit to Architect. Procurement Substitution Request must be made in writing in compliance with the following requirements:

1. Requests for substitution of materials and equipment will be considered if received no later than **10** days prior to date of bid opening.
2. Submittal Format: Submit three copies of each written Procurement Substitution Request, using form immediately following this section.

B. Architect's Action:

1. Architect may request additional information or documentation necessary for evaluation of the Procurement Substitution Request. Architect will notify all bidders of acceptance of the proposed substitute by means of an Addendum to the Procurement and Contracting Documents.

C. Architect's approval of a substitute during bidding does not relieve Contractor of the responsibility to submit required shop drawings and to comply with all other requirements of the Contract Documents.

END OF DOCUMENT 002600

Pioneer Valley Transit Authority
UMass Lift Replacement
Wendel Project No. 448715

SUBSTITUTION REQUEST FORM

PROJECT: PVTA UMass Lift Replacement

OWNER: Pioneer Valley Transit Authority

TO	Architect/Engineer	FROM	Contractor

WENDEL WD ACHITECTURE, ENGINEERING, SURVEYING & LANDSCAPE ARCHITECTURE P.C. (WENDEL)

375 Essjay Road, Suite 200
Williamsville, New York 14221

CONTRACTOR'S REQUEST, WITH SUPPORTING DATA

1. Specification Sections to which this request applies:

☐ Product data for proposed substitution is attached (description product, reference standards, performance and test data).

☐ Sample is attached

☐ Sample will be sent if required by Architect

2. Itemized comparison of proposed substitution with product specified.

	SPECIFIED PRODUCT	PROPOSED SUBSTITUTION
Name, brand		
Catalog No.		
Manufacturer:		
Significant Variations		

3. Proposed change in Contract Time:

☐ Reduce/Increase Contract Time by _____ days. ☐ No change.

4. Proposed Change in Contract Sum:

Credit to Owner $_____ Addition Cost to Owner $_____.

5. Effect of the proposed substitution on other parts of the Work, or on other contracts.

CONTRACTOR'S STATEMENT OF CONFORMANCE OF PROPOSED SUBSTITUTION TO CONTRACT REQUIREMENTS

We have investigated the proposed equivalent material and we:

1. believe that it is equal or superior in all respects to the originally specified product, except as stated in 2. above;
2. will provide the same warranty as required in Division 1 Section "Warranties";
3. will provide the same special warranty or guaranty as specified;
4. will pay redesign and special inspection costs caused by the use of this product;
5. will pay additional costs to other contractors caused by the substitution;
6. will coordinate the incorporation of the proposed substitution in the Work;
7. will modify other parts of the Work as may be needed, to make all parts of the Work complete and functioning;
8. waive future claims for added cost to Contractor caused by the proposed substitution;
9. confirm that this product is compliant with the Buy America Requirements as specified; and

Contractor Signature (s) _____ Date _____

Pioneer Valley Transit Authority
UMass Lift Replacement
Wendel Project No. 448715

ARCHITECT'S REVIEW AND ACTION

☐ Provide more information in the following categories. Resubmit.

☐ Sign Contractor's Statement of Conformance. Resubmit.

☐ The proposed substitution is approved, with the following conditions

_____

_____

Addition/Deduction from the Contract Time: _____ days.

Addition/Deduction from the Contract Amount: _____ dollars.

☐ The proposed Substitution is rejected for the following reason (s):

_____

_____

Wendel WD Architecture, Engineering, Surveying & Landscape Architecture P.C. (Wendel)	Date

DOCUMENT 004100 - BID FORM – GENERAL BID

Bid of _____ (hereinafter called "Bidder")*

(____) a corporation, organized and existing under the laws of the state of _____

(____) a partnership

(____) a joint venture

(____) an individual

doing business as _____

To the Pioneer Valley Transit Authority (hereinafter called "Owner").

Gentlemen:

A) The undersigned Bidder, in compliance with your invitation for bids for the project known as _____, having examined the plans and specifications and related documents and the site of the proposed work, having had the opportunity to visit the site, and being familiar with all of the conditions surrounding the construction of the proposed project including the availability of materials and labor, hereby proposes to furnish all labor, materials, and supplies, and to construct the project in accordance with the contract documents and the plans and specifications within the time set forth below, and at the prices stated below. These prices are to cover all expenses incurred in performing the work required under the contract documents, of which this bid is a part.

The Bidder hereby agrees to commence work on or before the date to be specified in written "Notice to Proceed" of the Owner, and to substantially complete the project within **75** consecutive calendar days thereafter.

_____
*Specify corporation, partnership or individual as applicable.

B) Bidder acknowledges receipt of and this bid includes the following addenda:

No. Dated:

No. Dated:

No. Dated:

No. Dated:

C) The Bidder agrees to perform the work described in the specifications and shown on the plans for the following contract price:

_____ Dollars ($_____)

The undersigned agrees that, if he is selected as general contractor, he will within five days, Saturdays, Sundays and legal holidays excluded, after presentation thereof by the awarding authority, execute a contract in accordance with the terms of this bid and furnish a performance bond and also a labor and materials or payment bond, each of a surety company qualified to do business under the laws of the commonwealth and satisfactory to the awarding authority and each in the sum of the contract price, the premiums for which are to be paid by the general contractor and are included in the contract price; provided, however, that if there is more than one surety company, the surety companies shall be jointly and severally liable.

The undersigned hereby certifies that he is able to furnish labor that can work in harmony with all other elements of labor employed or to be employed on the work; that all employees to be employed at the worksite will have successfully completed a course in construction safety and health approved by the United States Occupational Safety and Health Administration that is at least 10 hours in duration at the time the employee begins work and who shall furnish documentation of successful completion of said course with the first certified payroll report for each employee; that all employees to be employed in the work subject to this bid have successfully completed a course in construction safety and health approved by the United States Occupational Safety and Health Administration that is at least 10 hours in duration; and that he will comply fully with all laws and regulations applicable to awards made subject to section 44A.

The undersigned further certifies under the penalties of perjury that this bid is in all respects bona fide, fair and made without collusion or fraud with any other person. As used in this subsection the word "person" shall mean any natural person, joint venture, partnership, corporation or other business or legal entity. The undersigned further certifies under penalty of perjury that the said undersigned is not presently debarred from doing public construction work in the commonwealth under the provisions of section twenty-nine F of chapter twenty-nine, or any other applicable de-

barment provisions of any other chapter of the General Laws or any rule or regulation promulgated thereunder.

The Bidder understands that the Owner reserves the right to reject any or all bids and to waive any informalities in the bidding.

The Bidder agrees that this bid shall be good and may not be withdrawn for a period of 60 days, Saturdays, Sundays and legal holidays excluded, after the opening of bids.

Bid security is attached in the sum of five percent (5%) of the total bid in accordance with the conditions of Section 002113 INSTRUCTIONS TO BIDDERS. The bid security may become the property of the Owner in the event the contract and bonds are not executed within the time set forth above.

The selected Contractor shall furnish a performance bond and a payment bond in an amount at least equal to one hundred percent (100%) of the contract price in accordance with Section 00610 PERFORMANCE BOND, Section 006150 PAYMENT BOND, and as stipulated in Section 007000 GENERAL CONDITIONS and any supplemental general conditions thereto.

The undersigned offers the following information as evidence of his qualifications to perform the work as bid upon according to all the requirements of the plans and specifications.

1. Have been in business under present name for ____ years.

2. The names and addresses of all persons interested in the bid (if made by a partnership or corporation) as principals, are as follows:

_____
_____
_____
_____
_____
_____
(attach supplementary list if necessary)

3. The bidder is requested to state below what work of a similar character to that included in the proposed contract he has done and give references that will enable the Owner to judge his experience, skill and business standing (add supplementary page if necessary).

Completion Date	Project Name	Contract Amount	Design Architect	Reference Name	Telephone No.

a._____

_____

b._____

_____

c._____

_____

d._____

_____

e._____

_____

f._____

_____

Pursuant to M.G.L. C. 62C, Sec. 49A, I certify hereby in writing, under penalties of perjury, that the within named Bidder/Contractor has complied with all laws of the commonwealth relating to taxes, reporting of employees and contractors, and withholding and remitting of child support.

The undersigned bidder hereby certifies, under pains and penalties of perjury, that the foregoing bid is based upon the payment to laborers to be employed on the project of wages in an amount no less that the applicable prevailing wage rates established for the project by the Massachusetts Department of Labor and Workforce Development. The undersigned bidder agrees to indemnify the Awarding Authority for, from and against any loss, expense, damages, actions or claims, including any expense incurred in connection with any delay or stoppage of the project work arising out of or as a result of (1) the failure of the said bid to be based upon the payment of the said applicable prevailing wage rates or (2) the failure of the bidder, if selected as the contractor, to pay laborers employed on the project the said applicable prevailing wage rates.

Respectfully submitted:

Date: _____ By: _____
(Signature)

_____

(Type Name of Bidder)

_____
(Title)

_____
(Business Address)

_____
(City and State)

_____
(Telephone Number)

END OF DOCUMENT 004100

SECTION 004110 – BIDDER'S CHECKLIST

This checklist is provided to assist bidders in determining what documents are required to be submitted with each bid.

Each General Bid shall be accompanied by:

1. 004100 General Bid Form
2. General Bid Bond
3. State Required Certifications
    a. Certification of Tax Compliance
    b. Labor Harmony & OSHA Training Certification
    c. Right-to-Know Law Certification
    d. Certification Regarding Companies Doing Business With or In Northern Ireland
    e. Anti-Boycott Certification
    f. Prohibited Use of Undocumented Workers Certification
    g. Conflict of Interest Certification
    h. Public Contractor Debarment Certification
4. Federally Required Certifications
    a. Certification of Eligibility
    b. Certification of Non-Collusion
    c. Certification on Restrictions on Lobbying
    d. Buy America Manufactured Goods Certification
    e. Contractor's Statement on Sub-Contractors

NOTES:
Attention is called to the requirements. The federally required certifications must be submitted with the bid form for the proposal to be considered responsive to the bid specifications. All certification forms are contained in the Federal Clauses in Division 00. Those bids which do not contain the required standard certifications, complete and signed as appropriate, will be deemed ineligible.

DOCUMENT 005150 – AGREEMENT

1.1 AGREEMENT

A. AIA Document A101, "Standard Form of Agreement Between Owner and Contractor" is hereby incorporated into the Procurement and Contracting Requirements. A copy of AIA Document A101, "Standard Form of Agreement Between Owner and Contractor" is bound herein immediately following this page.

END OF DOCUMENT 005150

TEMPLATE

AIA® Document A101® – 2017

Standard Form of Agreement Between Owner and Contractor
where the basis of payment is a Stipulated Sum

AGREEMENT made as of the « » day of « » in the year « 2026 »
(In words, indicate day, month and year.)

BETWEEN the Owner:
(Name, legal status, address and other information)

«Pioneer Valley Transit Authority (PVTA) »« »
«2808 Main Street »
«Springfield MA 01107 »
« »

and the Contractor:
(Name, legal status, address and other information)

« »« »
« »
« »
« »

for the following Project:
(Name, location and detailed description)

«UMass Lift Replacement »
«UMass Transit Facility »
«185 Holdsworth Way
Amherst MA 01002 »

The Architect:
(Name, legal status, address and other information)

« Wendel WD Architecture, Engineering, Surveying and Landscape Architecture PC »« »
« 375 Essjay Road, Suite 200 »
« Williamsville NY 14221 »
« »

The Owner and Contractor agree as follows.

ADDITIONS AND DELETIONS: The author of this document has added information needed for its completion. The author may also have revised the text of the original AIA standard form. An *Additions and Deletions Report* that notes added information as well as revisions to the standard form text is available from the author and should be reviewed.

This document has important legal consequences. Consultation with an attorney is encouraged with respect to its completion or modification.

TEMP

ELECTRONIC COPYING of any portion of this AIA® Document to another electronic file is prohibited and constitutes a violation of copyright laws as set forth in the footer of this document.

AIA Document A101® – 2017. Copyright © 1915, 1918, 1925, 1937, 1951, 1958, 1961, 1963, 1967, 1974, 1977, 1987, 1991, 1997, 2007 and 2017 by The American Institute of Architects. All rights reserved. The "American Institute of Architects," "AIA," the AIA Logo, "A101," and "AIA Contract Documents" are registered trademarks and may not be used without permission. This document is not an original AIA® Contract Document, but a template produced by AIA® Contract Documents software for producing a customized document.

TABLE OF ARTICLES

1 THE CONTRACT DOCUMENTS

2 THE WORK OF THIS CONTRACT

3 DATE OF COMMENCEMENT AND SUBSTANTIAL COMPLETION

4 CONTRACT SUM

5 PAYMENTS

6 DISPUTE RESOLUTION

7 TERMINATION OR SUSPENSION

8 MISCELLANEOUS PROVISIONS

9 ENUMERATION OF CONTRACT DOCUMENTS

ARTICLE 1 THE CONTRACT DOCUMENTS

The Contract Documents consist of this Agreement, Conditions of the Contract (General, Supplementary, and other Conditions), Drawings, Specifications, Addenda issued prior to execution of this Agreement, other documents listed in this Agreement, and Modifications issued after execution of this Agreement, all of which form the Contract, and are as fully a part of the Contract as if attached to this Agreement or repeated herein. The Contract represents the entire and integrated agreement between the parties hereto and supersedes prior negotiations, representations, or agreements, either written or oral. An enumeration of the Contract Documents, other than a Modification, appears in Article 9.

ARTICLE 2 THE WORK OF THIS CONTRACT

The Contractor shall fully execute the Work described in the Contract Documents, except as specifically indicated in the Contract Documents to be the responsibility of others.

ARTICLE 3 DATE OF COMMENCEMENT AND SUBSTANTIAL COMPLETION

§ 3.1 The date of commencement of the Work shall be:
(Check one of the following boxes.)

[« »] The date of this Agreement.

[« »] A date set forth in a notice to proceed issued by the Owner.

[« »] Established as follows:
(Insert a date or a means to determine the date of commencement of the Work.)

« »

If a date of commencement of the Work is not selected, then the date of commencement shall be the date of this Agreement.

§ 3.2 The Contract Time shall be measured from the date of commencement of the Work.

§ 3.3 Substantial Completion

§ 3.3.1 Subject to adjustments of the Contract Time as provided in the Contract Documents, the Contractor shall achieve Substantial Completion of the entire Work:
(Check one of the following boxes and complete the necessary information.)

AIA Document A101® – 2017. Copyright © 1915, 1918, 1925, 1937, 1951, 1958, 1961, 1963, 1967, 1974, 1977, 1987, 1991, 1997, 2007 and 2017 by The American Institute of Architects. All rights reserved. The "American Institute of Architects," "AIA," the AIA Logo, "A101," and "AIA Contract Documents" are registered trademarks and may not be used without permission. This document is not an original AIA® Contract Document, but a template produced by AIA® Contract Documents software for producing a customized document.

[« »] Not later than « » (« ») calendar days from the date of commencement of the Work.

[« »] By the following date: « »

§ 3.3.2 Subject to adjustments of the Contract Time as provided in the Contract Documents, if portions of the Work are to be completed prior to Substantial Completion of the entire Work, the Contractor shall achieve Substantial Completion of such portions by the following dates:

Portion of Work	Substantial Completion Date

§ 3.3.3 If the Contractor fails to achieve Substantial Completion as provided in this Section 3.3, liquidated damages, if any, shall be assessed as set forth in Section 4.5.

ARTICLE 4 CONTRACT SUM

§ 4.1 The Owner shall pay the Contractor the Contract Sum in current funds for the Contractor's performance of the Contract. The Contract Sum shall be « » ($ « »), subject to additions and deductions as provided in the Contract Documents.

§ 4.2 Alternates

§ 4.2.1 Alternates, if any, included in the Contract Sum:

Item	Price

§ 4.2.2 Subject to the conditions noted below, the following alternates may be accepted by the Owner following execution of this Agreement. Upon acceptance, the Owner shall issue a Modification to this Agreement.
(Insert below each alternate and the conditions that must be met for the Owner to accept the alternate.)

Item	Price	Conditions for Acceptance

§ 4.3 Allowances, if any, included in the Contract Sum:
(Identify each allowance.)

Item	Price

§ 4.4 Unit prices, if any:
(Identify the item and state the unit price and quantity limitations, if any, to which the unit price will be applicable.)

Item	Units and Limitations	Price per Unit ($0.00)

§ 4.5 Liquidated damages, if any:
(Insert terms and conditions for liquidated damages, if any.)

« »

§ 4.6 Other:
(Insert provisions for bonus or other incentives, if any, that might result in a change to the Contract Sum.)

« »

AIA Document A101® – 2017. Copyright © 1915, 1918, 1925, 1937, 1951, 1958, 1961, 1963, 1967, 1974, 1977, 1987, 1991, 1997, 2007 and 2017 by The American Institute of Architects. All rights reserved. The "American Institute of Architects," "AIA," the AIA Logo, "A101," and "AIA Contract Documents" are registered trademarks and may not be used without permission. This document is not an original AIA® Contract Document, but a template produced by AIA® Contract Documents software for producing a customized document.

ARTICLE 5 PAYMENTS

§ 5.1 Progress Payments

§ 5.1.1 Based upon Applications for Payment submitted to the Architect by the Contractor and Certificates for Payment issued by the Architect, the Owner shall make progress payments on account of the Contract Sum to the Contractor as provided below and elsewhere in the Contract Documents.

§ 5.1.2 The period covered by each Application for Payment shall be one calendar month ending on the last day of the month, or as follows:

« »

§ 5.1.3 Provided that an Application for Payment is received by the Architect not later than the « » day of a month, the Owner shall make payment of the amount certified to the Contractor not later than the « » day of the « » month. If an Application for Payment is received by the Architect after the application date fixed above, payment of the amount certified shall be made by the Owner not later than « » (« ») days after the Architect receives the Application for Payment.
(Federal, state or local laws may require payment within a certain period of time.)

§ 5.1.4 Each Application for Payment shall be based on the most recent schedule of values submitted by the Contractor in accordance with the Contract Documents. The schedule of values shall allocate the entire Contract Sum among the various portions of the Work. The schedule of values shall be prepared in such form, and supported by such data to substantiate its accuracy, as the Architect may require. This schedule of values shall be used as a basis for reviewing the Contractor's Applications for Payment.

§ 5.1.5 Applications for Payment shall show the percentage of completion of each portion of the Work as of the end of the period covered by the Application for Payment.

§ 5.1.6 In accordance with AIA Document A201™–2017, General Conditions of the Contract for Construction, and subject to other provisions of the Contract Documents, the amount of each progress payment shall be computed as follows:

§ 5.1.6.1 Subject to other provisions of the Contract Documents, the amount of each progress payment shall be computed as follows:

.1 Take that portion of the Contract Sum properly allocable to completed Work as determined by multiplying the percentage completion of each portion of the Work by the share of the Contract Sum allocated to that portion of the Work in the schedule of values, less retainage of « » (« »). Pending final determination of cost to the Owner of changes in the Work, amounts not in dispute shall be included as provided in Section 7.3.9 of AIA Document A201™–2017, General Conditions of the Contract for Construction;

.2 Add that portion of the Contract Sum properly allocable to materials and equipment delivered and suitably stored at the site for subsequent incorporation in the completed construction (or, if approved in advance by the Owner, suitably stored off the site at a location agreed upon in writing), less retainage of « » (« »);

.3 Subtract the aggregate of previous payments made by the Owner; and

.4 Subtract amounts, if any, for which the Architect has withheld or nullified a Certificate for Payment as provided in Section 9.5 of AIA Document A201–2017.

§ 5.1.6.2 The progress payment amount determined in accordance with Section 5.1.6 herein shall be further modified under the following circumstances:

.1 Add, upon Substantial Completion of the Work, a sum sufficient to increase the total payments to the full amount of the Contract Sum, less such amounts as the Architect shall determine for incomplete Work, retainage applicable to such work and unsettled claims; and
(Section 9.8.5 of AIA Document A201–2017 requires release of applicable retainage upon Substantial Completion of Work with consent of surety, if any.)

.2 Add, if final completion of the Work is thereafter materially delayed through no fault of the Contractor, any additional amounts payable in accordance with Section 9.10.3 of AIA Document A201–2017.

AIA Document A101® – 2017. Copyright © 1915, 1918, 1925, 1937, 1951, 1958, 1961, 1963, 1967, 1974, 1977, 1987, 1991, 1997, 2007 and 2017 by The American Institute of Architects. All rights reserved. The "American Institute of Architects," "AIA," the AIA Logo, "A101," and "AIA Contract Documents" are registered trademarks and may not be used without permission. This document is not an original AIA® Contract Document, but a template produced by AIA® Contract Documents software for producing a customized document.

« »

« »

§ 5.1.7. Reduction or limitation of retainage, if any, shall be as follows:
(If the retainage established in Section 5.1.6.1 is to be modified prior to Substantial Completion of the entire Work, including modifications for Substantial Completion of portions of the Work as provided in Section 3.3.2, insert provisions for such modifications.)

« »

« »

§ 5.1.9 Except with the Owner's prior approval, the Contractor shall not make advance payments to suppliers for materials or equipment which have not been delivered and stored at the site.

§ 5.2 Final Payment

§ 5.2.1 Final payment, constituting the entire unpaid balance of the Contract Sum, shall be made by the Owner to the Contractor when

.1 the Contractor has fully performed the Contract except for the Contractor's responsibility to correct Work as provided in Article 12 of AIA Document A201–2017, and to satisfy other requirements, if any, which extend beyond final payment; and

.2 a final Certificate for Payment has been issued by the Architect.

§ 5.2.2 The Owner's final payment to the Contractor shall be made no later than 30 days after the issuance of the Architect's final Certificate for Payment, or as follows:

« »

§ 5.3 Interest

Payments due and unpaid under the Contract shall bear interest from the date payment is due at the rate stated below, or in the absence thereof, at the legal rate prevailing from time to time at the place where the Project is located.
(Insert rate of interest agreed upon, if any.)

« » % « »

ARTICLE 6 DISPUTE RESOLUTION

§ 6.1 Initial Decision Maker

The Architect will serve as the Initial Decision Maker pursuant to Article 15 of AIA Document A201–2017, unless the parties appoint below another individual, not a party to this Agreement, to serve as the Initial Decision Maker. For purposes of M.G.L. c.30, § 39J, decisions on Claims of the Contractor shall be final and binding.
(If the parties mutually agree, insert the name, address and other contact information of the Initial Decision Maker, if other than the Architect.)

« »
« »
« »
« »

AIA Document A101® – 2017. Copyright © 1915, 1918, 1925, 1937, 1951, 1958, 1961, 1963, 1967, 1974, 1977, 1987, 1991, 1997, 2007 and 2017 by The American Institute of Architects. All rights reserved. The "American Institute of Architects," "AIA," the AIA Logo, "A101," and "AIA Contract Documents" are registered trademarks and may not be used without permission. This document is not an original AIA® Contract Document, but a template produced by AIA® Contract Documents software for producing a customized document.

§ 6.2 Binding Dispute Resolution
For any Claim subject to, but not resolved by the Parties, the method of binding dispute resolution shall be as follows:
(Check the appropriate box.)

[« »] Arbitration pursuant to Section 15.4 of AIA Document A201–2017

[« X»] Litigation in a court of competent jurisdiction

[« »] Other *(Specify)*

« »

If the Owner and Contractor do not select a method of binding dispute resolution, or do not subsequently agree in writing to a binding dispute resolution method other than litigation, Claims will be resolved by litigation in a court of competent jurisdiction.

ARTICLE 7 TERMINATION OR SUSPENSION

§ 7.1 The Contract may be terminated by the Owner or the Contractor as provided in Article 14 of AIA Document A201–2017.

§ 7.1.1 If the Contract is terminated for the Owner's convenience in accordance with Article 14 of AIA Document A201–2017, then the Owner shall pay the Contractor a termination fee as follows: None. Notwithstanding anything to the contrary in the Contract Documents, in the event the Owner terminates the Contract for its convenience, the Owner shall be obligated solely to pay Contractor for Work properly performed up to the date of termination and, at Owner's election, for material delivered and suitably stored at the Site, subject to the Owner's right to withhold from amounts otherwise payable all amounts permitted to be withheld by the Contract and M.G.L. c.30, § 39K (building projects)/39G (non-building projects), and under no circumstances shall the Owner be liable for profits on Work not performed.
(Insert the amount of, or method for determining, the fee, if any, payable to the Contractor following a termination for the Owner's convenience.)

« »

§ 7.2 The Work may be suspended by the Owner as provided in Article 14 of AIA Document A201–2017.

ARTICLE 8 MISCELLANEOUS PROVISIONS

§ 8.1 Where reference is made in this Agreement to a provision of AIA Document A201–2017 or another Contract Document, the reference refers to that provision as amended or supplemented by other provisions of the Contract Documents.

§ 8.2 The Owner's representative:
(Name, address, email address, and other information)

« »
« »
« »
« »
« »
« »

§ 8.3 The Contractor's representative:
(Name, address, email address, and other information)

« »
« »
« »

AIA Document A101® – 2017. Copyright © 1915, 1918, 1925, 1937, 1951, 1958, 1961, 1963, 1967, 1974, 1977, 1987, 1991, 1997, 2007 and 2017 by The American Institute of Architects. All rights reserved. The "American Institute of Architects," "AIA," the AIA Logo, "A101," and "AIA Contract Documents" are registered trademarks and may not be used without permission. This document is not an original AIA® Contract Document, but a template produced by AIA® Contract Documents software for producing a customized document.

« »
« »
« »

§ 8.4 Neither the Owner's nor the Contractor's representative shall be changed without ten days' prior notice to the other party.

§ 8.5 Insurance and Bonds

§ 8.5.1 The Contractor shall purchase and maintain insurance as set forth in the Contract Documents.

§ 8.5.2 The Contractor shall provide bonds as set forth in the Contract Documents.

« »

§ 8.6 Other provisions:

« Notwithstanding anything to the contrary in the Contract, including this Agreement, and notwithstanding any Certificate for Payment or similar document signed by the Architect concerning payments to the Contractor, any failure of the Owner to deduct from any progress payment to the Contractor amounts the Owner is entitled to deduct under the Contract and/or M.G.L. c.30, § 39K (building projects)/39G (non-building projects) shall not operate as a waiver of the Owner's right to subsequently withhold such amounts from other payments due the Contractor, including without limitation liquidated damages and the value of the Owner's other claims against the Contractor as allowed by law and the Contract Documents.
»

ARTICLE 9 ENUMERATION OF CONTRACT DOCUMENTS

§ 9.1 This Agreement is comprised of the following documents:

.1 AIA Document A101™–2017, Standard Form of Agreement Between Owner and Contractor

.2 Intentionally omitted.

.3 AIA Document A201™–2017, General Conditions of the Contract for Construction

.4

« »

.4 Drawings

Number	Title	Date

.6 Specifications

Section	Title	Date	Pages

.7 Addenda, if any:

Number	Date	Pages

Portions of Addenda relating to bidding or proposal requirements are not part of the Contract Documents unless the bidding or proposal requirements are also enumerated in this Article 9.

.8 Other Exhibits:
(Check all boxes that apply and include appropriate information identifying the exhibit where required.)

AIA Document A101® – 2017. Copyright © 1915, 1918, 1925, 1937, 1951, 1958, 1961, 1963, 1967, 1974, 1977, 1987, 1991, 1997, 2007 and 2017 by The American Institute of Architects. All rights reserved. The "American Institute of Architects," "AIA," the AIA Logo, "A101," and "AIA Contract Documents" are registered trademarks and may not be used without permission. This document is not an original AIA® Contract Document, but a template produced by AIA® Contract Documents software for producing a customized document.

[« »]

« »

[« »]

Title	Date	Pages

[« »] Supplementary and other Conditions of the Contract:

Document	Title	Date	Pages

.9 Other documents, if any, listed below:
(List here any additional documents that are intended to form part of the Contract Documents. AIA Document A201™–2017 provides that the advertisement or invitation to bid, Instructions to Bidders, sample forms, the Contractor's bid or proposal, portions of Addenda relating to bidding or proposal requirements, and other information furnished by the Owner in anticipation of receiving bids or proposals, are part of the Contract Documents unless enumerated in this Agreement. Any such documents should be listed here only if intended to be part of the Contract Documents.)

« Bid Documents »

This Agreement entered into as of the day and year first written above.

OWNER *(Signature)*	**CONTRACTOR** *(Signature)*
« »« »	« »« »
(Printed name and title)	*(Printed name and title)*

TEMPLATE

AIA Document A101® – 2017. Copyright © 1915, 1918, 1925, 1937, 1951, 1958, 1961, 1963, 1967, 1974, 1977, 1987, 1991, 1997, 2007 and 2017 by The American Institute of Architects. All rights reserved. The "American Institute of Architects," "AIA," the AIA Logo, "A101," and "AIA Contract Documents" are registered trademarks and may not be used without permission. This document is not an original AIA® Contract Document, but a template produced by AIA® Contract Documents software for producing a customized document.

PERFORMANCE BOND

KNOW ALL MEN BY THESE PRESENTS: That we _____
(Name of Contractor)

a _____ hereinafter called "Principal" and
(Corporation, Partnership, Joint Venture or Individual)

_____of _____, State of _____
(Surety) (City & State)

_____ hereinafter called the "Surety" and licensed by the State Division of Insurance to do business under the laws of the Commonwealth of Massachusetts, are held and firmly bound to _____, hereinafter called "Owner", in the penal sum of
_____ Dollars
($_____) in lawful money of the United States, for the payment of which sum well and truly to be made, we bind ourselves, our heirs, executors, administrators and successors, jointly and severally, firmly by these presents.

THE CONDITION OF THIS OBLIGATION is such that Whereas, the Principal entered into a certain contract with the Owner, dated the _____ day of _____, 20___ (the "Construction Contract"), for the construction described as follows: _____
_____.

NOW, THEREFORE, if the Principal shall well, truly and faithfully perform its duties, all the undertakings, covenants, terms, conditions, and agreements of the Construction Contract during the original term thereof, and any extensions thereof which may be granted by the Owner, with or without notice to the Surety, and if he shall satisfy all claims and demands incurred under the Construction Contract, and shall fully indemnify and save harmless the Owner from all costs and damages which it may suffer by reason of failure to do so, and shall reimburse and repay the Owner all outlay and expense which the Owner may incur in making good any default, then this obligation shall be void; otherwise to remain in full force and effect.

PROVIDED, FURTHER, that the Surety's obligation under this Bond shall arise after (1) the Owner has declared the Principal in default of the Construction Contract or any provision thereof or (2) has declared that the Principal has failed, or is otherwise unable or unwilling, to execute the work consistent with, and in conformance to, the Construction Contract (collectively referred to as a "Contractor Default"). The determination of a Contractor Default shall be made solely by the Owner. The Owner need not terminate the Construction Contract to declare a Contractor Default or to invoke its rights under this Bond.

When the Surety's obligation under this Bond arises, the Surety, at its sole expense and at the consent and election of the Owner, shall promptly take one of the following steps: (1) arrange for the Principal to perform and complete the work of the Construction Contract: (2) arrange for a contractor other than the Principal to perform and complete the work of the Construction Contract; (3) reimburse the Owner, in a manner and at such time as the Owner shall decide, for all costs and expenses incurred by the Owner in performing and completing the work of the Construction Contract. Surety will keep Owner reasonably informed of the progress, status and results of any investigation of any claim of the Owner.

If the Surety does not proceed as provided in this Bond with due diligence and all deliberate speed, the Surety shall be deemed to be in default of this Bond, and the Owner shall be entitled to enforce any remedy available to the Owner.

After the Surety's obligation under this Bond arises, the Surety is obligated, to the limit of the amounts of this Bond, for (1) the correction of defective work and completion of the Construction Contract; (2) additional design, professional services, and legal costs, including attorneys' fees, resulting from the Contractor Default or from the default of the Surety under this Bond; (3) any additional work beyond the Construction Contract made necessary by the Contractor Default or default of the Surety under this Bond; (4) indemnification obligation of the Principal, if any, as provided in the Construction Contract; and (5) liquidated damages as provided in the Construction Contract, or if none are so specified, actual and foreseeable consequential damages resulting from the Contractor Default or default of the Surety under this Bond.

Any proceeding, legal or equitable, under this Bond shall be instituted in any court of competent jurisdiction in the Commonwealth of Massachusetts.

The Surety, for value received, hereby stipulates and agrees that no change, extension of time, alteration or addition to the terms of the Construction Contract or to the work to be performed thereunder or the specifications accompanying the same shall in any way affect its obligation on this Bond, and it does hereby waive notice of any such change, extension of time, alteration or addition to the terms of the Construction Contract or to the work or to the specifications.

IN WITNESS WHEREOF, this instrument is executed in _____ ( ) counterparts, each one of which shall be deemed an original, this the _____ day of _____, 20___.

ATTEST:

_____
Principal

_____ By _____
(Principal Secretary)

_____

_____

_____
(Address-Zip Code)

_____ (SEAL)
Witness as to Principal

_____

_____
(Address-Zip Code)

ATTEST:

_____
Surety

_____ By _____
(Attorney-in-Fact)

_____

_____
(Address-Zip Code)

_____ (SEAL)
Witness as to Surety

_____

_____
(Address-Zip Code)

NOTE: Date of Bond must not be prior to date of Contract. If Contractor is a Partnership, all partners should execute Bond.

PAYMENT BOND

KNOW ALL MEN BY THESE PRESENTS: That we _____

_____ a_____ _____
(Name of Contractor) (Corporation, Partnership, Joint Venture or Individual)

hereinafter called "Principal" and _____ of _____,
(Surety)

State of _____ hereinafter called the "Surety" and licensed by the State
(City and State)

Division of Insurance to do business under the laws of the Commonwealth of Massachusetts, are held and firmly bound to _____, hereinafter called "Owner", in the penal sum of _____ Dollars ($_____) in lawful money of the United States, for the payment of which sum well and truly to be made, we bind ourselves, our heirs, executors, administrators and successors, jointly and severally, firmly by these presents.

THE CONDITION OF THIS OBLIGATION is such that Whereas, the Principal entered into a certain contract with the Owner, dated the _____ day of _____, 20___, for the construction described as follows:

NOW, THEREFORE, if the Principal shall promptly make payment to all persons, firms, subcontractors, and corporations furnishing materials for or performing labor in the prosecution of the work provided for in such contract, and any authorized extension or modification thereof, including all amounts due for materials, lubricants, oil, gasoline, coal and coke, repairs on machinery, equipment and tools, consumed or used in connection with the construction of such work, and all insurance premiums on said work, and for all labor, performed in such work whether by subcontractor or otherwise, then this obligation shall be void; otherwise to remain in full force and effect.

PROVIDED, FURTHER, that the said Surety, for value received hereby stipulates and agrees that no change, extension of time, alteration or addition to the terms of the contract or to the work to be performed thereunder or the specifications accompanying the same shall in any way affect its obligation on this bond, and it does hereby waive notice of any such change, extension of time, alteration or addition to the terms of this contract or to the work or to the specifications.

PROVIDED, FURTHER, that no final settlement between the Owner and the Contractor shall abridge the right of any beneficiary hereunder, whose claim may be unsatisfied.

IN WITNESS WHEREOF, this instrument is executed in ____ ( ) counterparts, each one of which shall be deemed an original, this the _____ day of _____, 20__.

ATTEST:

_____
Surety

_____ By _____
(Attorney-in-Fact)

_____

_____
(Address-Zip Code)

_____ (SEAL)
Witness as to Surety

_____

_____
(Address-Zip Code)

NOTE: Date of Bond must not be prior to date of Contract. If Contractor is a Partnership, all partners should execute Bond.

TEMPLATE

AIA® Document A201® – 2017

General Conditions of the Contract for Construction

Editing Template
CAUTION: Take care not to remove or otherwise edit Project Data fill-point areas (Basic Information, Contract Details and Project Team) when making edits to this document.

for the following PROJECT:
(Name and location or address)

«UMass Lift Replacement »
« UMass Transit Facility
185 Holdsworth Way
Amherst MA 01002 »

THE OWNER:
(Name, legal status and address)

«Pioneer Valley Transit Authority (PVTA) »
«2808 Main Street, Springfield MA 01107 »
« »

THE ARCHITECT:
(Name, legal status and address)

«Wendel WD Architecture, Engineering, Surveying and Landscape Architecture PC »«
375 Essjay Road, Suite 200 »
« Williamsville NY 14221 »

TABLE OF ARTICLES

1 GENERAL PROVISIONS

2 OWNER

3 CONTRACTOR

4 ARCHITECT

5 SUBCONTRACTORS

6 CONSTRUCTION BY OWNER OR BY SEPARATE CONTRACTORS

7 CHANGES IN THE WORK

8 TIME

9 PAYMENTS AND COMPLETION

TEMP

ADDITIONS AND DELETIONS: The author of this document has added information needed for its completion. The author may also have revised the text of the original AIA standard form. An *Additions and Deletions Report* that notes added information as well as revisions to the standard form text is available from the author and should be reviewed.

This document has important legal consequences. Consultation with an attorney is encouraged with respect to its completion or modification.

ELECTRONIC COPYING of any portion of this AIA® Document to another electronic file is prohibited and constitutes a violation of copyright laws as set forth in the footer of this document.

AIA Document A201® – 2017. Copyright © 1911, 1915, 1918, 1925, 1937, 1951, 1958, 1961, 1963, 1966, 1970, 1976, 1987, 1997, 2007 and 2017 by The American Institute of Architects. All rights reserved. The "American Institute of Architects," "AIA," the AIA Logo, "A201," and "AIA Contract Documents" are registered trademarks and may not be used without permission. This document is not an original AIA® Contract Document, but a template produced by AIA® Contract Documents software for producing a customized document.

10 PROTECTION OF PERSONS AND PROPERTY

11 INSURANCE AND BONDS

12 UNCOVERING AND CORRECTION OF WORK

13 MISCELLANEOUS PROVISIONS

14 TERMINATION OR SUSPENSION OF THE CONTRACT

15 CLAIMS AND DISPUTES

TEMPLATE

AIA Document A201® – 2017. Copyright © 1911, 1915, 1918, 1925, 1937, 1951, 1958, 1961, 1963, 1966, 1970, 1976, 1987, 1997, 2007 and 2017 by The American Institute of Architects. All rights reserved. The "American Institute of Architects," "AIA," the AIA Logo, "A201," and "AIA Contract Documents" are registered trademarks and may not be used without permission. This document is not an original AIA® Contract Document, but a template produced by AIA® Contract Documents software for producing a customized document.

INDEX
(Topics and numbers in bold are Section headings.)

Acceptance of Nonconforming Work
9.6.6, 9.9.3, **12.3**
Acceptance of Work
9.6.6, 9.8.2, 9.9.3, 9.10.1, 9.10.3, 12.3
Access to Work
3.16, 6.2.1, 12.1
Accident Prevention
10
Acts and Omissions
3.2, 3.3.2, 3.12.8, 3.18, 4.2.3, 8.3.1, 9.5.1, 10.2.5, 10.2.8, 13.3.2, 14.1, 15.1.2, 15.2
Addenda
1.1.1
Additional Costs, Claims for
3.7.4, 3.7.5, 10.3.2, 15.1.5
Additional Inspections and Testing
9.4.2, 9.8.3, 12.2.1, **13.4**
Additional Time, Claims for
3.2.4, 3.7.4, 3.7.5, 3.10.2, 8.3.2, **15.1.6**
Administration of the Contract
3.1.3, **4.2**, 9.4, 9.5
Advertisement or Invitation to Bid
1.1.1
Aesthetic Effect
4.2.13
Allowances
3.8
Applications for Payment
4.2.5, 7.3.9, 9.2, **9.3**, 9.4, 9.5.1, 9.5.4, 9.6.3, 9.7, 9.10
Approvals
2.1.1, 2.3.1, 2.5, 3.1.3, 3.10.2, 3.12.8, 3.12.9, 3.12.10.1, 4.2.7, 9.3.2, 13.4.1
Arbitration
8.3.1, 15.3.2, **15.4**
ARCHITECT
4
Architect, Definition of
4.1.1
Architect, Extent of Authority
2.5, 3.12.7, 4.1.2, 4.2, 5.2, 6.3, 7.1.2, 7.3.4, 7.4, 9.2, 9.3.1, 9.4, 9.5, 9.6.3, 9.8, 9.10.1, 9.10.3, 12.1, 12.2.1, 13.4.1, 13.4.2, 14.2.2, 14.2.4, 15.1.4, 15.2.1
Architect, Limitations of Authority and Responsibility
2.1.1, 3.12.4, 3.12.8, 3.12.10, 4.1.2, 4.2.1, 4.2.2, 4.2.3, 4.2.6, 4.2.7, 4.2.10, 4.2.12, 4.2.13, 5.2.1, 7.4, 9.4.2, 9.5.4, 9.6.4, 15.1.4, 15.2
Architect's Additional Services and Expenses
2.5, 12.2.1, 13.4.2, 13.4.3, 14.2.4
Architect's Administration of the Contract
3.1.3, 3.7.4, 15.2, 9.4.1, 9.5
Architect's Approvals
2.5, 3.1.3, 3.5, 3.10.2, 4.2.7
Architect's Authority to Reject Work
3.5, 4.2.6, 12.1.2, 12.2.1
Architect's Copyright
1.1.7, 1.5
Architect's Decisions
3.7.4, 4.2.6, 4.2.7, 4.2.11, 4.2.12, 4.2.13, 4.2.14, 6.3, 7.3.4, 7.3.9, 8.1.3, 8.3.1, 9.2, 9.4.1, 9.5, 9.8.4, 9.9.1, 13.4.2, 15.2
Architect's Inspections
3.7.4, 4.2.2, 4.2.9, 9.4.2, 9.8.3, 9.9.2, 9.10.1, 13.4
Architect's Instructions
3.2.4, 3.3.1, 4.2.6, 4.2.7, 13.4.2
Architect's Interpretations
4.2.11, 4.2.12
Architect's Project Representative
4.2.10
Architect's Relationship with Contractor
1.1.2, 1.5, 2.3.3, 3.1.3, 3.2.2, 3.2.3, 3.2.4, 3.3.1, 3.4.2, 3.5, 3.7.4, 3.7.5, 3.9.2, 3.9.3, 3.10, 3.11, 3.12, 3.16, 3.18, 4.1.2, 4.2, 5.2, 6.2.2, 7, 8.3.1, 9.2, 9.3, 9.4, 9.5, 9.7, 9.8, 9.9, 10.2.6, 10.3, 11.3, 12, 13.3.2, 13.4, 15.2
Architect's Relationship with Subcontractors
1.1.2, 4.2.3, 4.2.4, 4.2.6, 9.6.3, 9.6.4, 11.3
Architect's Representations
9.4.2, 9.5.1, 9.10.1
Architect's Site Visits
3.7.4, 4.2.2, 4.2.9, 9.4.2, 9.5.1, 9.9.2, 9.10.1, 13.4
Asbestos
10.3.1
Attorneys' Fees
3.18.1, 9.6.8, 9.10.2, 10.3.3
Award of Separate Contracts
6.1.1, 6.1.2
Award of Subcontracts and Other Contracts for Portions of the Work
5.2
Basic Definitions
1.1
Bidding Requirements
1.1.1
Binding Dispute Resolution
8.3.1, 9.7, 11.5, 13.1, 15.1.2, 15.1.3, 15.2.1, 15.2.5, 15.2.6.1, 15.3.1, 15.3.2, 15.3.3, 15.4.1
Bonds, Lien
7.3.4.4, 9.6.8, 9.10.2, 9.10.3
Bonds, Performance, and Payment
7.3.4.4, 9.6.7, 9.10.3, **11.1.2**, 11.1.3, **11.5**
Building Information Models Use and Reliance
1.8
Building Permit
3.7.1
Capitalization
1.3
Certificate of Substantial Completion
9.8.3, 9.8.4, 9.8.5

AIA Document A201® – 2017. Copyright © 1911, 1915, 1918, 1925, 1937, 1951, 1958, 1961, 1963, 1966, 1970, 1976, 1987, 1997, 2007 and 2017 by The American Institute of Architects. All rights reserved. The "American Institute of Architects," "AIA," the AIA Logo, "A201," and "AIA Contract Documents" are registered trademarks and may not be used without permission. This document is not an original AIA® Contract Document, but a template produced by AIA® Contract Documents software for producing a customized document.

Certificates for Payment
4.2.1, 4.2.5, 4.2.9, 9.3.3, **9.4**, 9.5, 9.6.1, 9.6.6, 9.7, 9.10.1, 9.10.3, 14.1.1.3, 14.2.4, 15.1.4
Certificates of Inspection, Testing or Approval
13.4.4
Certificates of Insurance
9.10.2
Change Orders
1.1.1, 3.4.2, 3.7.4, 3.8.2.3, 3.11, 3.12.8, 4.2.8, 5.2.3, 7.1.2, 7.1.3, **7.2**, 7.3.2, 7.3.7, 7.3.9, 7.3.10, 8.3.1, 9.3.1.1, 9.10.3, 10.3.2, 11.2, 11.5, 12.1.2
Change Orders, Definition of
7.2.1
CHANGES IN THE WORK
2.2.2, 3.11, 4.2.8, **7**, 7.2.1, 7.3.1, 7.4, 8.3.1, 9.3.1.1, 11.5
Claims, Definition of
15.1.1
Claims, Notice of
1.6.2, 15.1.3
CLAIMS AND DISPUTES
3.2.4, 6.1.1, 6.3, 7.3.9, 9.3.3, 9.10.4, 10.3.3, **15**, 15.4
Claims and Timely Assertion of Claims
15.4.1
Claims for Additional Cost
3.2.4, 3.3.1, 3.7.4, 7.3.9, 9.5.2, 10.2.5, 10.3.2, **15.1.5**
Claims for Additional Time
3.2.4, 3.3.1, 3.7.4, 6.1.1, 8.3.2, 9.5.2, 10.3.2, **15.1.6**
Concealed or Unknown Conditions, Claims for
3.7.4
Claims for Damages
3.2.4, 3.18, 8.3.3, 9.5.1, 9.6.7, 10.2.5, 10.3.3, 11.3, 11.3.2, 14.2.4, 15.1.7
Claims Subject to Arbitration
15.4.1
Cleaning Up
3.15, 6.3
Commencement of the Work, Conditions Relating to
2.2.1, 3.2.2, 3.4.1, 3.7.1, 3.10.1, 3.12.6, 5.2.1, 5.2.3, 6.2.2, 8.1.2, 8.2.2, 8.3.1, 11.1, 11.2, **15.1.5**
Commencement of the Work, Definition of
8.1.2
Communications
3.9.1, **4.2.4**
Completion, Conditions Relating to
3.4.1, 3.11, 3.15, 4.2.2, 4.2.9, 8.2, 9.4.2, 9.8, 9.9.1, 9.10, 12.2, 14.1.2, 15.1.2
COMPLETION, PAYMENTS AND
9
Completion, Substantial
3.10.1, 4.2.9, 8.1.1, 8.1.3, 8.2.3, 9.4.2, 9.8, 9.9.1, 9.10.3, 12.2, 15.1.2
Compliance with Laws
2.3.2, 3.2.3, 3.6, 3.7, 3.12.10, 3.13, 9.6.4, 10.2.2, 13.1, 13.3, 13.4.1, 13.4.2, 13.5, 14.1.1, 14.2.1.3, 15.2.8, 15.4.2, 15.4.3
Concealed or Unknown Conditions
3.7.4, 4.2.8, 8.3.1, 10.3
Conditions of the Contract
1.1.1, 6.1.1, 6.1.4
Consent, Written
3.4.2, 3.14.2, 4.1.2, 9.8.5, 9.9.1, 9.10.2, 9.10.3, 13.2, 15.4.4.2
Consolidation or Joinder
15.4.4
CONSTRUCTION BY OWNER OR BY
SEPARATE CONTRACTORS
1.1.4, **6**
Construction Change Directive, Definition of
7.3.1
Construction Change Directives
1.1.1, 3.4.2, 3.11, 3.12.8, 4.2.8, 7.1.1, 7.1.2, 7.1.3, **7.3**, 9.3.1.1
Construction Schedules, Contractor's
3.10, 3.11, 3.12.1, 3.12.2, 6.1.3, 15.1.6.2
Contingent Assignment of Subcontracts
5.4, 14.2.2.2
Continuing Contract Performance
15.1.4
Contract, Definition of
1.1.2
CONTRACT, TERMINATION OR
SUSPENSION OF THE
5.4.1.1, 5.4.2, 11.5, **14**
Contract Administration
3.1.3, 4, 9.4, 9.5
Contract Award and Execution, Conditions Relating to
3.7.1, 3.10, 5.2, 6.1
Contract Documents, Copies Furnished and Use of
1.5.2, 2.3.6, 5.3
Contract Documents, Definition of
1.1.1
Contract Sum
2.2.2, 2.2.4, 3.7.4, 3.7.5, 3.8, 3.10.2, 5.2.3, 7.3, 7.4, **9.1**, 9.2, 9.4.2, 9.5.1.4, 9.6.7, 9.7, 10.3.2, 11.5, 12.1.2, 12.3, 14.2.4, 14.3.2, 15.1.4.2, **15.1.5, 15.2.5**
Contract Sum, Definition of
9.1
Contract Time
1.1.4, 2.2.1, 2.2.2, 3.7.4, 3.7.5, 3.10.2, 5.2.3, 6.1.5, 7.2.1.3, 7.3.1, 7.3.5, 7.3.6, 7, 7, 7.3.10, 7.4, 8.1.1, 8.2.1, 8.2.3, 8.3.1, 9.5.1, 9.7, 10.3.2, 12.1.1, 12.1.2, 14.3.2, 15.1.4.2, 15.1.6.1, 15.2.5
Contract Time, Definition of
8.1.1
CONTRACTOR
3
Contractor, Definition of
3.1, 6.1.2
Contractor's Construction and Submittal Schedules
3.10, 3.12.1, 3.12.2, 4.2.3, 6.1.3, 15.1.6.2

AIA Document A201® – 2017. Copyright © 1911, 1915, 1918, 1925, 1937, 1951, 1958, 1961, 1963, 1966, 1970, 1976, 1987, 1997, 2007 and 2017 by The American Institute of Architects. All rights reserved. The "American Institute of Architects," "AIA," the AIA Logo, "A201," and "AIA Contract Documents" are registered trademarks and may not be used without permission. This document is not an original AIA® Contract Document, but a template produced by AIA® Contract Documents software for producing a customized document.

Contractor's Employees
2.2.4, 3.3.2, 3.4.3, 3.8.1, 3.9, 3.18.2, 4.2.3, 4.2.6, 10.2, 10.3, 11.3, 14.1, 14.2.1.1
Contractor's Liability Insurance
11.1
Contractor's Relationship with Separate Contractors and Owner's Forces
3.12.5, 3.14.2, 4.2.4, 6, 11.3, 12.2.4
Contractor's Relationship with Subcontractors
1.2.2, 2.2.4, 3.3.2, 3.18.1, 3.18.2, 4.2.4, 5, 9.6.2, 9.6.7, 9.10.2, 11.2, 11.3, 11.4
Contractor's Relationship with the Architect
1.1.2, 1.5, 2.3.3, 3.1.3, 3.2.2, 3.2.3, 3.2.4, 3.3.1, 3.4.2, 3.5.1, 3.7.4, 3.10, 3.11, 3.12, 3.16, 3.18, 4.2, 5.2, 6.2.2, 7, 8.3.1, 9.2, 9.3, 9.4, 9.5, 9.7, 9.8, 9.9, 10.2.6, 10.3, 11.3, 12, 13.4, 15.1.3, 15.2.1
Contractor's Representations
3.2.1, 3.2.2, 3.5, 3.12.6, 6.2.2, 8.2.1, 9.3.3, 9.8.2
Contractor's Responsibility for Those Performing the Work
3.3.2, 3.18, 5.3, 6.1.3, 6.2, 9.5.1, 10.2.8
Contractor's Review of Contract Documents
3.2
Contractor's Right to Stop the Work
2.2.2, 9.7
Contractor's Right to Terminate the Contract
14.1
Contractor's Submittals
3.10, 3.11, 3.12, 4.2.7, 5.2.1, 5.2.3, 9.2, 9.3, 9.8.2, 9.8.3, 9.9.1, 9.10.2, 9.10.3
Contractor's Superintendent
3.9, 10.2.6
Contractor's Supervision and Construction Procedures
1.2.2, 3.3, 3.4, 3.12.10, 4.2.2, 4.2.7, 6.1.3, 6.2.4, 7.1.3, 7.3.4, 7.3.6, 8.2, 10, 12, 14, 15.1.4
Coordination and Correlation
1.2, 3.2.1, 3.3.1, 3.10, 3.12.6, 6.1.3, 6.2.1
Copies Furnished of Drawings and Specifications
1.5, 2.3.6, 3.11
Copyrights
1.5, **3.17**
Correction of Work
2.5, 3.7.3, 9.4.2, 9.8.2, 9.8.3, 9.9.1, 12.1.2, **12.2**, 12.3, 15.1.3.1, 15.1.3.2, 15.2.1
Correlation and Intent of the Contract Documents
1.2
Cost, Definition of
7.3.4
Costs
2.5, 3.2.4, 3.7.3, 3.8.2, 3.15.2, 5.4.2, 6.1.1, 6.2.3, 7.3.3.3, 7.3.4, 7.3.8, 7.3.9, 9.10.2, 10.3.2, 10.3.6, 11.2, 12.1.2, 12.2.1, 12.2.4, 13.4, 14
Cutting and Patching
3.14, 6.2.5
Damage to Construction of Owner or Separate Contractors
3.14.2, 6.2.4, 10.2.1.2, 10.2.5, 10.4, 12.2.4
Damage to the Work
3.14.2, 9.9.1, 10.2.1.2, 10.2.5, 10.4, 12.2.4
Damages, Claims for
3.2.4, 3.18, 6.1.1, 8.3.3, 9.5.1, 9.6.7, 10.3.3, 11.3.2, 11.3, 14.2.4, 15.1.7
Damages for Delay
6.2.3, 8.3.3, 9.5.1.6, 9.7, 10.3.2, 14.3.2
Date of Commencement of the Work, Definition of
8.1.2
Date of Substantial Completion, Definition of
8.1.3
Day, Definition of
8.1.4
Decisions of the Architect
3.7.4, 4.2.6, 4.2.7, 4.2.11, 4.2.12, 4.2.13, 6.3, 7.3.4, 7.3.9, 8.1.3, 8.3.1, 9.2, 9.4, 9.5.1, 9.8.4, 9.9.1, 13.4.2, 14.2.2, 14.2.4, 15.1, 15.2
Decisions to Withhold Certification
9.4.1, **9.5**, 9.7, 14.1.1.3
Defective or Nonconforming Work, Acceptance, Rejection and Correction of
2.5, 3.5, 4.2.6, 6.2.3, 9.5.1, 9.5.3, 9.6.6, 9.8.2, 9.9.3, 9.10.4, 12.2.1
Definitions
1.1, 2.1.1, 3.1.1, 3.5, 3.12.1, 3.12.2, 3.12.3, 4.1.1, 5.1, 6.1.2, 7.2.1, 7.3.1, 8.1, 9.1, 9.8.1, 15.1.1
Delays and Extensions of Time
3.2, **3.7.4**, 5.2.3, 7.2.1, 7.3.1, **7.4**, **8.3**, 9.5.1, **9.7**, 10.3.2, **10.4**, 14.3.2, **15.1.6**, 15.2.5
Digital Data Use and Transmission
1.7
Disputes
6.3, 7.3.9, 15.1, 15.2
Documents and Samples at the Site
3.11
Drawings, Definition of
1.1.5
Drawings and Specifications, Use and Ownership of
3.11
Effective Date of Insurance
8.2.2
Emergencies
10.4, 14.1.1.2, **15.1.5**
Employees, Contractor's
3.3.2, 3.4.3, 3.8.1, 3.9, 3.18.2, 4.2.3, 4.2.6, 10.2, 10.3.3, 11.3, 14.1, 14.2.1.1
Equipment, Labor, or Materials
1.1.3, 1.1.6, 3.4, 3.5, 3.8.2, 3.8.3, 3.12, 3.13, 3.15.1, 4.2.6, 4.2.7, 5.2.1, 6.2.1, 7.3.4, 9.3.2, 9.3.3, 9.5.1.3, 9.10.2, 10.2.1, 10.2.4, 14.2.1.1, 14.2.1.2
Execution and Progress of the Work
1.1.3, 1.2.1, 1.2.2, 2.3.4, 2.3.6, 3.1, 3.3.1, 3.4.1, 3.7.1, 3.10.1, 3.12, 3.14, 4.2, 6.2.2, 7.1.3, 7.3.6, 8.2, 9.5.1, 9.9.1, 10.2, 10.3, 12.1, 12.2, 14.2, 14.3.1, 15.1.4

AIA Document A201® – 2017. Copyright © 1911, 1915, 1918, 1925, 1937, 1951, 1958, 1961, 1963, 1966, 1970, 1976, 1987, 1997, 2007 and 2017 by The American Institute of Architects. All rights reserved. The "American Institute of Architects," "AIA," the AIA Logo, "A201," and "AIA Contract Documents" are registered trademarks and may not be used without permission. This document is not an original AIA® Contract Document, but a template produced by AIA® Contract Documents software for producing a customized document.

Extensions of Time
3.2.4, 3.7.4, 5.2.3, 7.2.1, 7.3, 7.4, 9.5.1, 9.7, 10.3.2, 10.4, 14.3, 15.1.6, **15.2.5**
Failure of Payment
9.5.1.3, **9.7**, 9.10.2, 13.5, 14.1.1.3, 14.2.1.2
Faulty Work
(See Defective or Nonconforming Work)
Final Completion and Final Payment
4.2.1, 4.2.9, 9.8.2, **9.10**, 12.3, 14.2.4, 14.4.3
Financial Arrangements, Owner's
2.2.1, 13.2.2, 14.1.1.4
GENERAL PROVISIONS
1
Governing Law
13.1
Guarantees (See Warranty)
Hazardous Materials and Substances
10.2.4, **10.3**
Identification of Subcontractors and Suppliers
5.2.1
Indemnification
3.17, **3.18**, 9.6.8, 9.10.2, 10.3.3, 11.3
Information and Services Required of the Owner
2.1.2, **2.2**, 2.3, 3.2.2, 3.12.10.1, 6.1.3, 6.1.4, 6.2.5, 9.6.1, 9.9.2, 9.10.3, 10.3.3, 11.2, 13.4.1, 13.4.2, 14.1.1.4, 14.1.4, 15.1.4
Initial Decision
15.2
Initial Decision Maker, Definition of
1.1.8
Initial Decision Maker, Decisions
14.2.4, 15.1.4.2, 15.2.1, 15.2.2, 15.2.3, 15.2.4, 15.2.5
Initial Decision Maker, Extent of Authority
14.2.4, 15.1.4.2, 15.2.1, 15.2.2, 15.2.3, 15.2.4, 15.2.5
Injury or Damage to Person or Property
10.2.8, 10.4
Inspections
3.1.3, 3.3.3, 3.7.1, 4.2.2, 4.2.6, 4.2.9, 9.4.2, 9.8.3, 9.9.2, 9.10.1, 12.2.1, 13.4
Instructions to Bidders
1.1.1
Instructions to the Contractor
3.2.4, 3.3.1, 3.8.1, 5.2.1, 7, 8.2.2, 12, 13.4.2
Instruments of Service, Definition of
1.1.7
Insurance
6.1.1, 7.3.4, 8.2.2, 9.3.2, 9.8.4, 9.9.1, 9.10.2, 10.2.5, **11**
Insurance, Notice of Cancellation or Expiration
11.1.4, 11.2.3
Insurance, Contractor's Liability
11.1
Insurance, Effective Date of
8.2.2, 14.4.2
Insurance, Owner's Liability
11.2
Insurance, Property
10.2.5, 11.2, 11.4, 11.5
Insurance, Stored Materials
9.3.2
INSURANCE AND BONDS
11
Insurance Companies, Consent to Partial Occupancy
9.9.1
Insured loss, Adjustment and Settlement of
11.5
Intent of the Contract Documents
1.2.1, 4.2.7, 4.2.12, 4.2.13
Interest
13.5
Interpretation
1.1.8, 1.2.3, **1.4**, 4.1.1, 5.1, 6.1.2, 15.1.1
Interpretations, Written
4.2.11, 4.2.12
Judgment on Final Award
15.4.2
Labor and Materials, Equipment
1.1.3, 1.1.6, **3.4**, 3.5, 3.8.2, 3.8.3, 3.12, 3.13, 3.15.1, 5.2.1, 6.2.1, 7.3.4, 9.3.2, 9.3.3, 9.5.1.3, 9.10.2, 10.2.1, 10.2.4, 14.2.1.1, 14.2.1.2
Labor Disputes
8.3.1
Laws and Regulations
1.5, 2.3.2, 3.2.3, 3.2.4, 3.6, 3.7, 3.12.10, 3.13, 9.6.4, 9.9.1, 10.2.2, 13.1, 13.3.1, 13.4.2, 13.5, 14, 15.2.8, 15.4
Liens
2.1.2, 9.3.1, 9.3.3, 9.6.8, 9.10.2, 9.10.4, 15.2.8
Limitations, Statutes of
12.2.5, 15.1.2, 15.4.1.1
Limitations of Liability
3.2.2, 3.5, 3.12.10, 3.12.10.1, 3.17, 3.18.1, 4.2.6, 4.2.7, 6.2.2, 9.4.2, 9.6.4, 9.6.7, 9.6.8, 10.2.5, 10.3.3, 11.3, 12.2.5, 13.3.1
Limitations of Time
2.1.2, 2.2, 2.5, 3.2.2, 3.10, 3.11, 3.12.5, 3.15.1, 4.2.7, 5.2, 5.3, 5.4.1, 6.2.4, 7.3, 7.4, 8.2, 9.2, 9.3.1, 9.3.3, 9.4.1, 9.5, 9.6, 9.7, 9.8, 9.9, 9.10, 12.2, 13.4, 14, 15, 15.1.2, 15.1.3, 15.1.5
Materials, Hazardous
10.2.4, **10.3**
Materials, Labor, Equipment and
1.1.3, 1.1.6, 3.4.1, 3.5, 3.8.2, 3.8.3, 3.12, 3.13, 3.15.1, 5.2.1, 6.2.1, 7.3.4, 9.3.2, 9.3.3, 9.5.1.3, 9.10.2, 10.2.1.2, 10.2.4, 14.2.1.1, 14.2.1.2
Means, Methods, Techniques, Sequences and Procedures of Construction
3.3.1, 3.12.10, 4.2.2, 4.2.7, 9.4.2
Mechanic's Lien
2.1.2, 9.3.1, 9.3.3, 9.6.8, 9.10.2, 9.10.4, 15.2.8
Mediation
8.3.1, 15.1.3.2, 15.2.1, 15.2.5, 15.2.6, **15.3**, 15.4.1, 15.4.1.1

AIA Document A201® – 2017. Copyright © 1911, 1915, 1918, 1925, 1937, 1951, 1958, 1961, 1963, 1966, 1970, 1976, 1987, 1997, 2007 and 2017 by The American Institute of Architects. All rights reserved. The "American Institute of Architects," "AIA," the AIA Logo, "A201," and "AIA Contract Documents" are registered trademarks and may not be used without permission. This document is not an original AIA® Contract Document, but a template produced by AIA® Contract Documents software for producing a customized document.

Minor Changes in the Work
1.1.1, 3.4.2, 3.12.8, 4.2.8, 7.1, **7.4**
MISCELLANEOUS PROVISIONS
13
Modifications, Definition of
1.1.1
Modifications to the Contract
1.1.1, 1.1.2, 2.5, 3.11, 4.1.2, 4.2.1, 5.2.3, 7, 8.3.1, 9.7, 10.3.2
Mutual Responsibility
6.2
Nonconforming Work, Acceptance of
9.6.6, 9.9.3, **12.3**
Nonconforming Work, Rejection and Correction of
2.4, 2.5, 3.5, 4.2.6, 6.2.4, 9.5.1, 9.8.2, 9.9.3, 9.10.4, 12.2
Notice
1.6, 1.6.1, 1.6.2, 2.1.2, 2.2.2., 2.2.3, 2.2.4, 2.5, 3.2.4, 3.3.1, 3.7.4, 3.7.5, 3.9.2, 3.12.9, 3.12.10, 5.2.1, 7.4, 8.2.2 9.6.8, 9.7, 9.10.1, 10.2.8, 10.3.2, 11.5, 12.2.2.1, 13.4.1, 13.4.2, 14.1, 14.2.2, 14.4.2, 15.1.3, 15.1.5, 15.1.6, 15.4.1
Notice of Cancellation or Expiration of Insurance
11.1.4, 11.2.3
Notice of Claims
1.6.2, 2.1.2, 3.7.4, 9.6.8, 10.2.8, **15.1.3**, 15.1.5, 15.1.6, 15.2.8, 15.3.2, 15.4.1
Notice of Testing and Inspections
13.4.1, 13.4.2
Observations, Contractor's
3.2, 3.7.4
Occupancy
2.3.1, 9.6.6, 9.8
Orders, Written
1.1.1, 2.4, 3.9.2, 7, 8.2.2, 11.5, 12.1, 12.2.2.1, 13.4.2, 14.3.1
OWNER
2
Owner, Definition of
2.1.1
Owner, Evidence of Financial Arrangements
2.2, 13.2.2, 14.1.1.4
Owner, Information and Services Required of the
2.1.2, **2.2**, 2.3, 3.2.2, 3.12.10, 6.1.3, 6.1.4, 6.2.5, 9.3.2, 9.6.1, 9.6.4, 9.9.2, 9.10.3, 10.3.3, 11.2, 13.4.1, 13.4.2, 14.1.1.4, 14.1.4, 15.1.4
Owner's Authority
1.5, 2.1.1, 2.3.32.4, 2.5, 3.4.2, 3.8.1, 3.12.10, 3.14.2, 4.1.2, 4.2.4, 4.2.9, 5.2.1, 5.2.4, 5.4.1, 6.1, 6.3, 7.2.1, 7.3.1, 8.2.2, 8.3.1, 9.3.2, 9.5.1, 9.6.4, 9.9.1, 9.10.2, 10.3.2, 11.4, 11.5, 12.2.2, 12.3, 13.2.2, 14.3, 14.4, 15.2.7
Owner's Insurance
11.2
Owner's Relationship with Subcontractors
1.1.2, 5.2, 5.3, 5.4, 9.6.4, 9.10.2, 14.2.2
Owner's Right to Carry Out the Work
2.5, 14.2.2
Owner's Right to Clean Up
6.3
Owner's Right to Perform Construction and to Award Separate Contracts
6.1
Owner's Right to Stop the Work
2.4
Owner's Right to Suspend the Work
14.3
Owner's Right to Terminate the Contract
14.2, 14.4
Ownership and Use of Drawings, Specifications and Other Instruments of Service
1.1.1, 1.1.6, 1.1.7, **1.5**, 2.3.6, 3.2.2, 3.11, 3.17, 4.2.12, 5.3
Partial Occupancy or Use
9.6.6, **9.9**
Patching, Cutting and
3.14, 6.2.5
Patents
3.17
Payment, Applications for
4.2.5, 7.3.9, 9.2, **9.3**, 9.4, 9.5, 9.6.3, 9.7, 9.8.5, 9.10.1, 14.2.3, 14.2.4, 14.4.3
Payment, Certificates for
4.2.5, 4.2.9, 9.3.3, **9.4**, 9.5, 9.6.1, 9.6.6, 9.7, 9.10.1, 9.10.3, 14.1.1.3, 14.2.4
Payment, Failure of
9.5.1.3, **9.7**, 9.10.2, 13.5, 14.1.1.3, 14.2.1.2
Payment, Final
4.2.1, 4.2.9, **9.10**, 12.3, 14.2.4, 14.4.3
Payment Bond, Performance Bond and
7.3.4.4, 9.6.7, 9.10.3, **11.1.2**
Payments, Progress
9.3, **9.6**, 9.8.5, 9.10.3, 14.2.3, 15.1.4
PAYMENTS AND COMPLETION
9
Payments to Subcontractors
5.4.2, 9.5.1.3, 9.6.2, 9.6.3, 9.6.4, 9.6.7, 14.2.1.2
PCB
10.3.1
Performance Bond and Payment Bond
7.3.4.4, 9.6.7, 9.10.3, **11.1.2**
Permits, Fees, Notices and Compliance with Laws
2.3.1, **3.7**, 3.13, 7.3.4.4, 10.2.2
PERSONS AND PROPERTY, PROTECTION OF
10
Polychlorinated Biphenyl
10.3.1
Product Data, Definition of
3.12.2
Product Data and Samples, Shop Drawings
3.11, **3.12**, 4.2.7

AIA Document A201® – 2017. Copyright © 1911, 1915, 1918, 1925, 1937, 1951, 1958, 1961, 1963, 1966, 1970, 1976, 1987, 1997, 2007 and 2017 by The American Institute of Architects. All rights reserved. The "American Institute of Architects," "AIA," the AIA Logo, "A201," and "AIA Contract Documents" are registered trademarks and may not be used without permission. This document is not an original AIA® Contract Document, but a template produced by AIA® Contract Documents software for producing a customized document.

Progress and Completion
4.2.2, **8.2**, 9.8, 9.9.1, 14.1.4, 15.1.4
Progress Payments
9.3, **9.6**, 9.8.5, 9.10.3, 14.2.3, 15.1.4
Project, Definition of
1.1.4
Project Representatives
4.2.10
Property Insurance
10.2.5, **11.2**
Proposal Requirements
1.1.1
PROTECTION OF PERSONS AND PROPERTY
10
Regulations and Laws
1.5, 2.3.2, 3.2.3, 3.6, 3.7, 3.12.10, 3.13, 9.6.4, 9.9.1, 10.2.2, 13.1, 13.3, 13.4.1, 13.4.2, 13.5, 14, 15.2.8, 15.4
Rejection of Work
4.2.6, 12.2.1
Releases and Waivers of Liens
9.3.1, 9.10.2
Representations
3.2.1, 3.5, 3.12.6, 8.2.1, 9.3.3, 9.4.2, 9.5.1, 9.10.1
Representatives
2.1.1, 3.1.1, 3.9, 4.1.1, 4.2.10, 13.2.1
Responsibility for Those Performing the Work
3.3.2, 3.18, 4.2.2, 4.2.3, 5.3, 6.1.3, 6.2, 6.3, 9.5.1, 10
Retainage
9.3.1, 9.6.2, 9.8.5, 9.9.1, 9.10.2, 9.10.3
Review of Contract Documents and Field Conditions by Contractor
3.2, 3.12.7, 6.1.3
Review of Contractor's Submittals by Owner and Architect
3.10.1, 3.10.2, 3.11, 3.12, 4.2, 5.2, 6.1.3, 9.2, 9.8.2
Review of Shop Drawings, Product Data and Samples by Contractor
3.12
Rights and Remedies
1.1.2, 2.4, 2.5, 3.5, 3.7.4, 3.15.2, 4.2.6, 5.3, 5.4, 6.1, 6.3, 7.3.1, 8.3, 9.5.1, 9.7, 10.2.5, 10.3, 12.2.1, 12.2.2, 12.2.4, **13.3**, 14, 15.4
Royalties, Patents and Copyrights
3.17
Rules and Notices for Arbitration
15.4.1
Safety of Persons and Property
10.2, 10.4
Safety Precautions and Programs
3.3.1, 4.2.2, 4.2.7, 5.3, **10.1**, 10.2, 10.4
Samples, Definition of
3.12.3
Samples, Shop Drawings, Product Data and
3.11, **3.12**, 4.2.7
Samples at the Site, Documents and
3.11
Schedule of Values
9.2, 9.3.1
Schedules, Construction
3.10, 3.12.1, 3.12.2, 6.1.3, 15.1.6.2
Separate Contracts and Contractors
1.1.4, 3.12.5, 3.14.2, 4.2.4, 4.2.7, 6, 8.3.1, 12.1.2
Separate Contractors, Definition of
6.1.1
Shop Drawings, Definition of
3.12.1
Shop Drawings, Product Data and Samples
3.11, **3.12**, 4.2.7
Site, Use of
3.13, 6.1.1, 6.2.1
Site Inspections
3.2.2, 3.3.3, 3.7.1, 3.7.4, 4.2, 9.9.2, 9.4.2, 9.10.1, 13.4
Site Visits, Architect's
3.7.4, 4.2.2, 4.2.9, 9.4.2, 9.5.1, 9.9.2, 9.10.1, 13.4
Special Inspections and Testing
4.2.6, 12.2.1, 13.4
Specifications, Definition of
1.1.6
Specifications
1.1.1, **1.1.6**, 1.2.2, 1.5, 3.12.10, 3.17, 4.2.14
Statute of Limitations
15.1.2, 15.4.1.1
Stopping the Work
2.2.2, 2.4, 9.7, 10.3, 14.1
Stored Materials
6.2.1, 9.3.2, 10.2.1.2, 10.2.4
Subcontractor, Definition of
5.1.1
SUBCONTRACTORS
5
Subcontractors, Work by
1.2.2, 3.3.2, 3.12.1, 3.18, 4.2.3, 5.2.3, 5.3, 5.4, 9.3.1.2, 9.6.7
Subcontractual Relations
5.3, 5.4, 9.3.1.2, 9.6, 9.10, 10.2.1, 14.1, 14.2.1
Submittals
3.10, 3.11, 3.12, 4.2.7, 5.2.1, 5.2.3, 7.3.4, 9.2, 9.3, 9.8, 9.9.1, 9.10.2, 9.10.3
Submittal Schedule
3.10.2, 3.12.5, 4.2.7
Subrogation, Waivers of
6.1.1, **11.3**
Substances, Hazardous
10.3
Substantial Completion
4.2.9, 8.1.1, 8.1.3, 8.2.3, 9.4.2, **9.8**, 9.9.1, 9.10.3, 12.2, 15.1.2
Substantial Completion, Definition of
9.8.1
Substitution of Subcontractors
5.2.3, 5.2.4
Substitution of Architect
2.3.3

EXEMPLAR

AIA Document A201® – 2017. Copyright © 1911, 1915, 1918, 1925, 1937, 1951, 1958, 1961, 1963, 1966, 1970, 1976, 1987, 1997, 2007 and 2017 by The American Institute of Architects. All rights reserved. The "American Institute of Architects," "AIA," the AIA Logo, "A201," and "AIA Contract Documents" are registered trademarks and may not be used without permission. This document is not an original AIA® Contract Document, but a template produced by AIA® Contract Documents software for producing a customized document.

Substitutions of Materials
3.4.2, 3.5, 7.3.8
Sub-subcontractor, Definition of
5.1.2
Subsurface Conditions
3.7.4
Successors and Assigns
13.2
Superintendent
3.9, 10.2.6
Supervision and Construction Procedures
1.2.2, **3.3**, 3.4, 3.12.10, 4.2.2, 4.2.7, 6.1.3, 6.2.4, 7.1.3, 7.3.4, 8.2, 8.3.1, 9.4.2, 10, 12, 14, 15.1.4
Suppliers
1.5, 3.12.1, 4.2.4, 4.2.6, 5.2.1, 9.3, 9.4.2, 9.5.4, 9.6, 9.10.5, 14.2.1
Surety
5.4.1.2, 9.6.8, 9.8.5, 9.10.2, 9.10.3, 11.1.2, 14.2.2, 15.2.7
Surety, Consent of
9.8.5, 9.10.2, 9.10.3
Surveys
1.1.7, 2.3.4
Suspension by the Owner for Convenience
14.3
Suspension of the Work
3.7.5, 5.4.2, 14.3
Suspension or Termination of the Contract
5.4.1.1, 14
Taxes
3.6, 3.8.2.1, 7.3.4.4
Termination by the Contractor
14.1, 15.1.7
Termination by the Owner for Cause
5.4.1.1, **14.2,** 15.1.7
Termination by the Owner for Convenience
14.4
Termination of the Architect
2.3.3
Termination of the Contractor Employment
14.2.2

TERMINATION OR SUSPENSION OF THE CONTRACT
14
Tests and Inspections
3.1.3, 3.3.3, 3.7.1, 4.2.2, 4.2.6, 4.2.9, 9.4.2, 9.8.3, 9.9.2, 9.10.1, 10.3.2, 12.2.1, **13.4**
TIME
8
Time, Delays and Extensions of
3.2.4, 3.7.4, 5.2.3, 7.2.1, 7.3.1, 7.4, **8.3**, 9.5.1, 9.7, 10.3.2, 10.4, 14.3.2, 15.1.6, 15.2.5
Time Limits
2.1.2, 2.2, 2.5, 3.2.2, 3.10, 3.11, 3.12.5, 3.15.1, 4.2, 5.2, 5.3, 5.4, 6.2.4, 7.3, 7.4, 8.2, 9.2, 9.3.1, 9.3.3, 9.4.1, 9.5, 9.6, 9.7, 9.8, 9.9, 9.10, 12.2, 13.4, 14, 15.1.2, 15.1.3, 15.4
Time Limits on Claims
3.7.4, 10.2.8, 15.1.2, 15.1.3
Title to Work
9.3.2, 9.3.3
UNCOVERING AND CORRECTION OF WORK
12
Uncovering of Work
12.1
Unforeseen Conditions, Concealed or Unknown
3.7.4, 8.3.1, 10.3
Unit Prices
7.3.3.2, 9.1.2
Use of Documents
1.1.1, 1.5, 2.3.6, 3.12.6, 5.3
Use of Site
3.13, 6.1.1, 6.2.1
Values, Schedule of
9.2, 9.3.1
Waiver of Claims by the Architect
13.3.2
Waiver of Claims by the Contractor
9.10.5, 13.3.2, **15.1.7**
Waiver of Claims by the Owner
9.9.3, 9.10.3, 9.10.4, 12.2.2.1, 13.3.2, 14.2.4, **15.1.7**
Waiver of Consequential Damages
14.2.4, 15.1.7
Waiver of Liens
9.3, 9.10.2, 9.10.4
Waivers of Subrogation
6.1.1, **11.3**
Warranty
3.5, 4.2.9, 9.3.3, 9.8.4, 9.9.1, 9.10.2, 9.10.4, 12.2.2, 15.1.2
Weather Delays
8.3, 15.1.6.2
Work, Definition of
1.1.3
Written Consent
1.5.2, 3.4.2, 3.7.4, 3.12.8, 3.14.2, 4.1.2, 9.3.2, 9.10.3, 13.2, 13.3.2, 15.4.4.2
Written Interpretations
4.2.11, 4.2.12
Written Orders
1.1.1, 2.4, 3.9, 7, 8.2.2, 12.1, 12.2, 13.4.2, 14.3.1

AIA Document A201® – 2017. Copyright © 1911, 1915, 1918, 1925, 1937, 1951, 1958, 1961, 1963, 1966, 1970, 1976, 1987, 1997, 2007 and 2017 by The American Institute of Architects. All rights reserved. The "American Institute of Architects," "AIA," the AIA Logo, "A201," and "AIA Contract Documents" are registered trademarks and may not be used without permission. This document is not an original AIA® Contract Document, but a template produced by AIA® Contract Documents software for producing a customized document.

ARTICLE 1 GENERAL PROVISIONS

§ 1.1 Basic Definitions

§ 1.1.1 The Contract Documents

The Contract Documents are enumerated in the Agreement between the Owner and Contractor (hereinafter the Agreement) and consist of the Bidding Requirements (Advertisement or Invitation to Bid, Instructions to Bidders, Completed Bid Forms, Bid Bond, completed Contractor's Qualification Statement, and other sample forms).Agreement, Conditions of the Contract (General, Supplementary and other Conditions), Drawings, Specifications, Addenda issued prior to execution of the Contract, other documents listed in the Agreement, and Modifications issued after execution of the Contract. A Modification is (1) a written amendment to the Contract signed by both parties, (2) a Change Order, (3) a Construction Change Directive, or (4) a written order for a minor change in the Work issued by the Architect.

§ 1.1.2 The Contract

The Contract Documents form the Contract for Construction. The Contract represents the entire and integrated agreement between the parties hereto and supersedes prior negotiations, representations, or agreements, either written or oral. The Contract may be amended or modified only by a Modification. The Contract Documents shall not be construed to create a contractual relationship of any kind (1) between the Contractor and the Architect or the Architect's consultants, (2) between the Owner and a Subcontractor or a Sub-subcontractor, (3) between the Owner and the Architect or the Architect's consultants, or (4) between any persons or entities other than the Owner and the Contractor. The Architect shall, however, be entitled to performance and enforcement of obligations under the Contract intended to facilitate performance of the Architect's duties.

§ 1.1.3 The Work

The term "Work" means the construction and services required by the Contract Documents, whether completed or partially completed, and includes all other labor, materials, equipment, and services provided or to be provided by the Contractor to fulfill the Contractor's obligations. The Work may constitute the whole or a part of the Project.

§ 1.1.4 The Project

The Project is the total construction of which the Work performed under the Contract Documents may be the whole or a part and which may include construction by the Owner and by Separate Contractors.

§ 1.1.5 The Drawings

The Drawings are the graphic and pictorial portions of the Contract Documents showing the design, location and dimensions of the Work, generally including plans, elevations, sections, details, schedules, and diagrams.

§ 1.1.6 The Specifications

The Specifications are that portion of the Contract Documents consisting of the written requirements for materials, equipment, systems, standards and workmanship for the Work, and performance of related services.

§ 1.1.7 Instruments of Service

Instruments of Service are representations, in any medium of expression now known or later developed, of the tangible and intangible creative work performed by the Architect and the Architect's consultants under their respective professional services agreements. Instruments of Service may include, without limitation, studies, surveys, models, sketches, drawings, specifications, and other similar materials.

§ 1.1.8 Initial Decision Maker

The Initial Decision Maker is the person identified in the Agreement to render initial decisions on Claims in accordance with Section 15.2. The Initial Decision Maker shall not show partiality to the Owner or Contractor and shall not be liable for results of interpretations or decisions rendered in good faith.

§ 1.2 Correlation and Intent of the Contract Documents

§ 1.2.1 The intent of the Contract Documents is to include all items necessary for the proper execution and completion of the Work by the Contractor. The Contract Documents are complementary, and what is required by one shall be as binding as if required by all; performance by the Contractor shall be required only to the extent consistent with the Contract Documents and reasonably inferable from them as being necessary to produce the indicated results.

AIA Document A201® – 2017. Copyright © 1911, 1915, 1918, 1925, 1937, 1951, 1958, 1961, 1963, 1966, 1970, 1976, 1987, 1997, 2007 and 2017 by The American Institute of Architects. All rights reserved. The "American Institute of Architects," "AIA," the AIA Logo, "A201," and "AIA Contract Documents" are registered trademarks and may not be used without permission. This document is not an original AIA® Contract Document, but a template produced by AIA® Contract Documents software for producing a customized document.

§ 1.2.1.1 The invalidity of any provision of the Contract Documents shall not invalidate the Contract or its remaining provisions. If it is determined that any provision of the Contract Documents violates any law, or is otherwise invalid or unenforceable, then that provision shall be revised to the extent necessary to make that provision legal and enforceable. In such case the Contract Documents shall be construed, to the fullest extent permitted by law, to give effect to the parties' intentions and purposes in executing the Contract.

§ 1.2.2 Organization of the Specifications into divisions, sections and articles, and arrangement of Drawings shall not control the Contractor in dividing the Work among Subcontractors or in establishing the extent of Work to be performed by any trade.

§ 1.2.3 Unless otherwise stated in the Contract Documents, words that have well-known technical or construction industry meanings are used in the Contract Documents in accordance with such recognized meanings.

§ 1.3 Capitalization

Terms capitalized in these General Conditions include those that are (1) specifically defined, (2) the titles of numbered articles, or (3) the titles of other documents published by the American Institute of Architects.

§ 1.4 Interpretation

In the interest of brevity the Contract Documents frequently omit modifying words such as "all" and "any" and articles such as "the" and "an," but the fact that a modifier or an article is absent from one statement and appears in another is not intended to affect the interpretation of either statement.

§ 1.5 Ownership and Use of Drawings, Specifications, and Other Instruments of Service

§ 1.5.1 The Architect and the Architect's consultants shall be deemed the authors and owners of their respective Instruments of Service, including the Drawings and Specifications, and retain all common law, statutory, and other reserved rights in their Instruments of Service, including copyrights. The Contractor, Subcontractors, Sub-subcontractors, and suppliers shall not own or claim a copyright in the Instruments of Service. Submittal or distribution to meet official regulatory requirements or for other purposes in connection with the Project is not to be construed as publication in derogation of the Architect's or Architect's consultants' reserved rights.

§ 1.5.2 The Contractor, Subcontractors, Sub-subcontractors, and suppliers are authorized to use and reproduce the Instruments of Service provided to them, subject to any protocols established pursuant to Sections 1.7 and 1.8, solely and exclusively for execution of the Work. All copies made under this authorization shall bear the copyright notice, if any, shown on the Instruments of Service. The Contractor, Subcontractors, Sub-subcontractors, and suppliers may not use the Instruments of Service on other projects or for additions to the Project outside the scope of the Work without the specific written consent of the Owner, Architect, and the Architect's consultants.

§ 1.6 Notice

§ 1.6.1 Except as otherwise provided in Section 1.6.2, where the Contract Documents require one party to notify or give notice to the other party, such notice shall be provided in writing to the designated representative of the party to whom the notice is addressed and shall be deemed to have been duly served if delivered in person, by mail, by courier, or by electronic transmission if a method for electronic transmission is set forth in the Agreement.

§ 1.6.2 Notice of Claims as provided in Section 15.1.3 shall be provided in writing and shall be deemed to have been duly served only if delivered to the designated representative of the party to whom the notice is addressed by certified or registered mail, or by courier providing proof of delivery.

§ 1.7 Digital Data Use and Transmission

The parties shall agree upon protocols governing the transmission and use of Instruments of Service or any other information or documentation in digital form. The parties will use AIA Document E203™–2013, Building Information Modeling and Digital Data Exhibit, to establish the protocols for the development, use, transmission, and exchange of digital data.

§ 1.8 Building Information Models Use and Reliance

Any use of, or reliance on, all or a portion of a building information model without agreement to protocols governing the use of, and reliance on, the information contained in the model and without having those protocols set

AIA Document A201® – 2017. Copyright © 1911, 1915, 1918, 1925, 1937, 1951, 1958, 1961, 1963, 1966, 1970, 1976, 1987, 1997, 2007 and 2017 by The American Institute of Architects. All rights reserved. The "American Institute of Architects," "AIA," the AIA Logo, "A201," and "AIA Contract Documents" are registered trademarks and may not be used without permission. This document is not an original AIA® Contract Document, but a template produced by AIA® Contract Documents software for producing a customized document.

forth in AIA Document E203™–2013, Building Information Modeling and Digital Data Exhibit, and the requisite AIA Document G202™–2013, Project Building Information Modeling Protocol Form, shall be at the using or relying party's sole risk and without liability to the other party and its contractors or consultants, the authors of, or contributors to, the building information model, and each of their agents and employees.

ARTICLE 2 OWNER

§ 2.1 General

§ 2.1.1 The Owner is the person or entity identified as such in the Agreement and is referred to throughout the Contract Documents as if singular in number. The Owner shall designate in writing a representative who shall have express authority to bind the Owner with respect to all matters requiring the Owner's approval or authorization. Except as otherwise provided in Section 4.2.1, the Architect does not have such authority. The term "Owner" means the Owner or the Owner's authorized representative.

§ 2.1.2 The Owner shall furnish to the Contractor, within fifteen days after receipt of a written request, information necessary and relevant for the Contractor to evaluate, give notice of, or enforce mechanic's lien rights. Such information shall include a correct statement of the record legal title to the property on which the Project is located, usually referred to as the site, and the Owner's interest therein.

§ 2.2 Evidence of the Owner's Financial Arrangements

§ 2.2.1 Prior to commencement of the Work and upon written request by the Contractor, the Owner shall furnish to the Contractor reasonable evidence that the Owner has made financial arrangements to fulfill the Owner's obligations under the Contract. The Contractor shall have no obligation to commence the Work until the Owner provides such evidence. If commencement of the Work is delayed under this Section 2.2.1, the Contract Time shall be extended appropriately.

§ 2.2.2 Following commencement of the Work and upon written request by the Contractor, the Owner shall furnish to the Contractor reasonable evidence that the Owner has made financial arrangements to fulfill the Owner's obligations under the Contract only if (1) the Owner fails to make payments to the Contractor as the Contract Documents require; (2) the Contractor identifies in writing a reasonable concern regarding the Owner's ability to make payment when due; or (3) a change in the Work materially changes the Contract Sum. If the Owner fails to provide such evidence, as required, within fourteen days of the Contractor's request, the Contractor may immediately stop the Work and, in that event, shall notify the Owner that the Work has stopped. However, if the request is made because a change in the Work materially changes the Contract Sum under (3) above, the Contractor may immediately stop only that portion of the Work affected by the change until reasonable evidence is provided. If the Work is stopped under this Section 2.2.2, the Contract Time shall be extended appropriately and the Contract Sum shall be increased by the amount of the Contractor's reasonable costs of shutdown, delay and start-up, plus interest as provided in the Contract Documents.

§ 2.2.3 After the Owner furnishes evidence of financial arrangements under this Section 2.2, the Owner shall not materially vary such financial arrangements without prior notice to the Contractor.

§ 2.2.4 Where the Owner has designated information furnished under this Section 2.2 as "confidential," the Contractor shall keep the information confidential and shall not disclose it to any other person. However, the Contractor may disclose "confidential" information, after seven (7) days' notice to the Owner, where disclosure is required by law, including a subpoena or other form of compulsory legal process issued by a court or governmental entity, or by court or arbitrator(s) order. The Contractor may also disclose "confidential" information to its employees, consultants, sureties, Subcontractors and their employees, Sub-subcontractors, and others who need to know the content of such information solely and exclusively for the Project and who agree to maintain the confidentiality of such information.

§ 2.3 Information and Services Required of the Owner

§ 2.3.1 If required by the nature of the work, except for permits and fees that are the responsibility of the Contractor under the Contract Documents, including those required under Section 3.7.1, the Owner shall secure and pay for necessary approvals, easements, assessments and charges required for construction, use or occupancy of permanent structures or for permanent changes in existing facilities.

AIA Document A201® – 2017. Copyright © 1911, 1915, 1918, 1925, 1937, 1951, 1958, 1961, 1963, 1966, 1970, 1976, 1987, 1997, 2007 and 2017 by The American Institute of Architects. All rights reserved. The "American Institute of Architects," "AIA," the AIA Logo, "A201," and "AIA Contract Documents" are registered trademarks and may not be used without permission. This document is not an original AIA® Contract Document, but a template produced by AIA® Contract Documents software for producing a customized document.

§ 2.3.2 The Owner shall retain an architect lawfully licensed to practice architecture, or an entity lawfully practicing architecture, in the jurisdiction where the Project is located. That person or entity is identified as the Architect in the Agreement and is referred to throughout the Contract Documents as if singular in number.

§ 2.3.3 If the employment of the Architect terminates, the Owner shall employ a successor to whom the Contractor has no reasonable objection and whose status under the Contract Documents shall be that of the Architect.

§ 2.3.4 The Owner shall furnish surveys describing physical characteristics, legal limitations and utility locations for the site of the Project, and a legal description of the site. The Contractor shall be entitled to rely on the accuracy of information furnished by the Owner but shall exercise proper precautions relating to the safe performance of the Work.

§ 2.3.5 The Owner shall furnish information or services required of the Owner by the Contract Documents with reasonable promptness. The Owner shall also furnish any other information or services under the Owner's control and relevant to the Contractor's performance of the Work with reasonable promptness after receiving the Contractor's written request for such information or services.

§ 2.3.6 Unless otherwise provided in the Contract Documents, the Owner shall furnish to the Contractor one copy of the Contract Documents for purposes of making reproductions pursuant to Section 1.5.2.

§ 2.4 Owner's Right to Stop the Work

If the Contractor fails to correct Work that is not in accordance with the requirements of the Contract Documents as required by Section 12.2 or repeatedly fails to carry out Work in accordance with the Contract Documents, the Owner may issue a written order to the Contractor to stop the Work, or any portion thereof, until the cause for such order has been eliminated; however, the right of the Owner to stop the Work shall not give rise to a duty on the part of the Owner to exercise this right for the benefit of the Contractor or any other person or entity, except to the extent required by Section 6.1.3.

§ 2.5 Owner's Right to Carry Out the Work

If the Contractor defaults or neglects to carry out the Work in accordance with the Contract Documents and fails within a ten-day period after receipt of notice from the Owner to commence and continue correction of such default or neglect with diligence and promptness, the Owner may, without prejudice to other remedies the Owner may have, correct such default or neglect. Such action by the Owner and amounts charged to the Contractor are both subject to prior approval of the Architect and the Architect may, pursuant to Section 9.5.1, withhold or nullify a Certificate for Payment in whole or in part, to the extent reasonably necessary to reimburse the Owner for the reasonable cost of correcting such deficiencies, including Owner's expenses and compensation for the Architect's additional services made necessary by such default, neglect, or failure. If current and future payments are not sufficient to cover such amounts, the Contractor shall pay the difference to the Owner. If the Contractor disagrees with the actions of the Owner or the Architect, or the amounts claimed as costs to the Owner, the Contractor may file a Claim pursuant to Article 15.

ARTICLE 3 CONTRACTOR

§ 3.1 General

§ 3.1.1 The Contractor is the person or entity identified as such in the Agreement and is referred to throughout the Contract Documents as if singular in number. The Contractor shall be lawfully licensed, if required in the jurisdiction where the Project is located. The Contractor shall designate in writing a representative who shall have express authority to bind the Contractor with respect to all matters under this Contract. The term "Contractor" means the Contractor or the Contractor's authorized representative.

§ 3.1.2 The Contractor shall perform the Work in accordance with the Contract Documents.

§ 3.1.3 The Contractor shall not be relieved of its obligations to perform the Work in accordance with the Contract Documents either by activities or duties of the Architect in the Architect's administration of the Contract, or by tests, inspections or approvals required or performed by persons or entities other than the Contractor.

AIA Document A201® – 2017. Copyright © 1911, 1915, 1918, 1925, 1937, 1951, 1958, 1961, 1963, 1966, 1970, 1976, 1987, 1997, 2007 and 2017 by The American Institute of Architects. All rights reserved. The "American Institute of Architects," "AIA," the AIA Logo, "A201," and "AIA Contract Documents" are registered trademarks and may not be used without permission. This document is not an original AIA® Contract Document, but a template produced by AIA® Contract Documents software for producing a customized document.

§ 3.2 Review of Contract Documents and Field Conditions by Contractor

§ 3.2.1 Execution of the Contract by the Contractor is a representation that the Contractor has visited the site, become generally familiar with local conditions under which the Work is to be performed, and correlated personal observations with requirements of the Contract Documents.

§ 3.2.2 Because the Contract Documents are complementary, the Contractor shall, before starting each portion of the Work, carefully study and compare the various Contract Documents relative to that portion of the Work, as well as the information furnished by the Owner pursuant to Section 2.3.4, shall take field measurements of any existing conditions related to that portion of the Work, and shall observe any conditions at the site affecting it. These obligations are for the purpose of facilitating coordination and construction by the Contractor and are not for the purpose of discovering errors, omissions, or inconsistencies in the Contract Documents; however, the Contractor shall promptly report to the Architect any errors, inconsistencies or omissions discovered by or made known to the Contractor as a request for information in such form as the Architect may require. It is recognized that the Contractor's review is made in the Contractor's capacity as a contractor and not as a licensed design professional, unless otherwise specifically provided in the Contract Documents. If the Contractor fails to make such report, no excuse will thereafter be entertained by Owner or Architect for failure to carry out the work in satisfactory manner. Should conflict occur within or between Contract Documents, the Contractor is deemed to have estimated on more expensive way of doing work, unless the Contractor asked for and obtained written decision before submission of proposal as to which method or materials will be required.

§ 3.2.3 The Contractor is not required to ascertain that the Contract Documents are in accordance with applicable laws, statutes, ordinances, codes, rules and regulations, or lawful orders of public authorities, but the Contractor shall promptly report to the Architect any nonconformity discovered by or made known to the Contractor as a request for information in such form as the Architect may require.

§ 3.2.4 If the Contractor believes that additional cost or time is involved because of clarifications or instructions the Architect issues in response to the Contractor's notices or requests for information pursuant to Sections 3.2.2 or 3.2.3, the Contractor shall submit Claims as provided in Article 15. If the Contractor fails to perform the obligations of Sections 3.2.2 or 3.2.3, the Contractor shall pay such costs and damages to the Owner, subject to Section 15.1.7, as would have been avoided if the Contractor had performed such obligations. If the Contractor performs those obligations, the Contractor shall not be liable to the Owner or Architect for damages resulting from errors, inconsistencies or omissions in the Contract Documents, for differences between field measurements or conditions and the Contract Documents, or for nonconformities of the Contract Documents to applicable laws, statutes, ordinances, codes, rules and regulations, and lawful orders of public authorities.

§ 3.3 Supervision and Construction Procedures

§ 3.3.1 The Contractor shall supervise and direct the Work, using the Contractor's best skill and attention. The Contractor shall be solely responsible for, and have control over, construction means, methods, techniques, sequences, and procedures, and for coordinating all portions of the Work under the Contract. If the Contract Documents give specific instructions concerning construction means, methods, techniques, sequences, or procedures, the Contractor shall evaluate the jobsite safety thereof and shall be solely responsible for the jobsite safety of such means, methods, techniques, sequences, or procedures. If the Contractor determines that such means, methods, techniques, sequences or procedures may not be safe, the Contractor shall give timely notice to the Owner and Architect, and shall propose alternative means, methods, techniques, sequences, or procedures. The Architect shall evaluate the proposed alternative solely for conformance with the design intent for the completed construction. Unless the Architect objects to the Contractor's proposed alternative, the Contractor shall perform the Work using its alternative means, methods, techniques, sequences, or procedures.

§ 3.3.2 The Contractor shall be responsible to the Owner for acts and omissions of the Contractor's employees, Subcontractors and their agents and employees, and other persons or entities performing portions of the Work for, or on behalf of, the Contractor or any of its Subcontractors.

§ 3.3.3 The Contractor shall be responsible for inspection of portions of Work already performed to determine that such portions are in proper condition to receive subsequent Work.

AIA Document A201® – 2017. Copyright © 1911, 1915, 1918, 1925, 1937, 1951, 1958, 1961, 1963, 1966, 1970, 1976, 1987, 1997, 2007 and 2017 by The American Institute of Architects. All rights reserved. The "American Institute of Architects," "AIA," the AIA Logo, "A201," and "AIA Contract Documents" are registered trademarks and may not be used without permission. This document is not an original AIA® Contract Document, but a template produced by AIA® Contract Documents software for producing a customized document.

§ 3.4 Labor and Materials

§ 3.4.1 Unless otherwise provided in the Contract Documents, the Contractor shall provide and pay for labor, materials, equipment, tools, construction equipment and machinery, water, heat, utilities, transportation, and other facilities and services necessary for proper execution and completion of the Work, whether temporary or permanent and whether or not incorporated or to be incorporated in the Work.

§ 3.4.2 The Contractor may propose substitutions in accordance with requirements for substitutions in Division 1 Specifications.

§ 3.4.3 The Contractor shall enforce strict discipline and good order among the Contractor's employees and other persons carrying out the Work. The Contractor shall not permit employment of unfit persons or persons not properly skilled in tasks assigned to them.

§ 3.5 Warranty

§ 3.5.1 The Contractor warrants to the Owner and Architect that materials and equipment furnished under the Contract will be of good quality and new unless the Contract Documents require or permit otherwise. The Contractor further warrants that the Work will conform to the requirements of the Contract Documents and will be free from defects, except for those inherent in the quality of the Work the Contract Documents require or permit. Work, materials, or equipment not conforming to these requirements may be considered defective. The Contractor's warranty excludes remedy for damage or defect caused by abuse, alterations to the Work not executed by the Contractor, improper or insufficient maintenance, improper operation, or normal wear and tear and normal usage. If required by the Architect, the Contractor shall furnish satisfactory evidence as to the kind and quality of materials and equipment.

§ 3.5.2 All material, equipment, or other special warranties required by the Contract Documents shall be issued in the name of the Owner, or shall be transferable to the Owner, and shall commence in accordance with Section 9.8.4.

§ 3.6 Taxes

§ 3.6.1.1 The Owner is exempt from payment of sales and compensating use taxes of the State of __ and all it's Cities and Counties, in accordance with all applicable State Laws and Regulations. These taxes are not to be included in the Contract Sum.

§ 3.6.1.2 Exception: Plumbing and Drainage Contractor/Subcontractor to obtain and pay for all necessary connection taxes and other service charges required by local sewer or water authorities to complete plumbing services.

§ 3.7 Permits, Fees, Notices and Compliance with Laws

§ 3.7.1 Unless otherwise provided in the Contract Documents, the Contractor shall secure and pay for the building permit as well as for other permits, fees, licenses, and inspections by government agencies necessary for proper execution and completion of the Work that are customarily secured after execution of the Contract and legally required at the time bids are received or negotiations concluded. The School District will obtain a building permit from the State Education Department. No other building permit is required.

§ 3.7.2 The Contractor shall comply with and give notices required by applicable laws, statutes, ordinances, codes, rules and regulations, and lawful orders of public authorities applicable to performance of the Work.

§ 3.7.3 If the Contractor performs Work knowing it to be contrary to applicable laws, statutes, ordinances, codes, rules and regulations, or lawful orders of public authorities, the Contractor shall assume appropriate responsibility for such Work and shall bear the costs attributable to correction.

§ 3.7.4 Concealed or Unknown Conditions

If the Contractor encounters conditions at the site that are (1) subsurface or otherwise concealed physical conditions that differ materially from those indicated in the Contract Documents or (2) unknown physical conditions of an unusual nature that differ materially from those ordinarily found to exist and generally recognized as inherent in construction activities of the character provided for in the Contract Documents, the Contractor shall promptly provide notice to the Owner and the Architect before conditions are disturbed and in no event later than 14 days

AIA Document A201® – 2017. Copyright © 1911, 1915, 1918, 1925, 1937, 1951, 1958, 1961, 1963, 1966, 1970, 1976, 1987, 1997, 2007 and 2017 by The American Institute of Architects. All rights reserved. The "American Institute of Architects," "AIA," the AIA Logo, "A201," and "AIA Contract Documents" are registered trademarks and may not be used without permission. This document is not an original AIA® Contract Document, but a template produced by AIA® Contract Documents software for producing a customized document.

after first observance of the conditions. The Architect will promptly investigate such conditions and, if the Architect determines that they differ materially and cause an increase or decrease in the Contractor's cost of, or time required for, performance of any part of the Work, will recommend that an equitable adjustment be made in the Contract Sum or Contract Time, or both. If the Architect determines that the conditions at the site are not materially different from those indicated in the Contract Documents and that no change in the terms of the Contract is justified, the Architect shall promptly notify the Owner and Contractor, stating the reasons. If either party disputes the Architect's determination or recommendation, that party may submit a Claim as provided in Article 15.

§ 3.7.5 If, in the course of the Work, the Contractor encounters human remains or recognizes the existence of burial markers, archaeological sites or wetlands not indicated in the Contract Documents, the Contractor shall immediately suspend any operations that would affect them and shall notify the Owner and Architect. Upon receipt of such notice, the Owner shall promptly take any action necessary to obtain governmental authorization required to resume the operations. The Contractor shall continue to suspend such operations until otherwise instructed by the Owner but shall continue with all other operations that do not affect those remains or features. Requests for adjustments in the Contract Sum and Contract Time arising from the existence of such remains or features may be made as provided in Article 15.

§ 3.8 Allowances

§ 3.8.1 The Contractor shall include in the Contract Sum all allowances stated in the Contract Documents. Items covered by allowances shall be supplied for such amounts and by such persons or entities as the Owner may direct, but the Contractor shall not be required to employ persons or entities to whom the Contractor has reasonable objection.

§ 3.8.2 Unless otherwise provided in the Contract Documents,

- **.1** allowances shall cover the cost to the Contractor of materials and equipment delivered at the site and all required taxes, less applicable trade discounts;
- **.2** Contractor's costs for unloading and handling at the site, labor, installation costs, overhead, profit, and other expenses contemplated for stated allowance amounts shall be included in the Contract Sum but not in the allowances; and
- **.3** whenever costs are more than or less than allowances, the Contract Sum shall be adjusted accordingly by Change Order. The amount of the Change Order shall reflect (1) the difference between actual costs and the allowances under Section 3.8.2.1 and (2) changes in Contractor's costs under Section 3.8.2.2.

§ 3.8.3 Materials and equipment under an allowance shall be selected by the Owner with reasonable promptness.

§ 3.9 Superintendent

§ 3.9.1 The Contractor shall employ a competent superintendent and necessary assistants who shall be in attendance at the Project site during performance of the Work. The superintendent shall represent the Contractor, and communications given to the superintendent shall be as binding as if given to the Contractor.

§ 3.9.2 The Contractor, as soon as practicable after award of the Contract, shall notify the Owner and Architect of the name and qualifications of a proposed superintendent. Within 14 days of receipt of the information, the Architect may notify the Contractor, stating whether the Owner or the Architect (1) has reasonable objection to the proposed superintendent or (2) requires additional time for review. Failure of the Architect to provide notice within the 14-day period shall constitute notice of no reasonable objection.

§ 3.9.3 The Contractor shall not employ a proposed superintendent to whom the Owner or Architect has made reasonable and timely objection. The Contractor shall not change the superintendent without the Owner's consent, which shall not unreasonably be withheld or delayed. Proposed changes of Superintendents shall follow the same review procedure as in 3.9.2.

§ 3.10 Contractor's Construction and Submittal Schedules

§ 3.10.1 The Contractor, promptly after being awarded the Contract, shall submit for the Owner's and Architect's information a Contractor's construction schedule for the Work. The schedule shall contain detail appropriate for the Project, including (1) the date of commencement of the Work, interim schedule milestone dates, and the date of Substantial Completion; (2) an apportionment of the Work by construction activity; and (3) the time required for

AIA Document A201® – 2017. Copyright © 1911, 1915, 1918, 1925, 1937, 1951, 1958, 1961, 1963, 1966, 1970, 1976, 1987, 1997, 2007 and 2017 by The American Institute of Architects. All rights reserved. The "American Institute of Architects," "AIA," the AIA Logo, "A201," and "AIA Contract Documents" are registered trademarks and may not be used without permission. This document is not an original AIA® Contract Document, but a template produced by AIA® Contract Documents software for producing a customized document.

completion of each portion of the Work. The schedule shall provide for the orderly progression of the Work to completion and shall not exceed time limits current under the Contract Documents. The schedule shall be revised at appropriate intervals as required by the conditions of the Work and Project.

§ 3.10.2 The Contractor, promptly after being awarded the Contract and thereafter as necessary to maintain a current submittal schedule, shall submit a submittal schedule for the Architect's approval. The Architect's approval shall not be unreasonably delayed or withheld. The submittal schedule shall (1) be coordinated with the Contractor's construction schedule, and (2) allow the Architect reasonable time to review submittals. If the Contractor fails to submit a submittal schedule, or fails to provide submittals in accordance with the approved submittal schedule, the Contractor shall not be entitled to any increase in Contract Sum or extension of Contract Time based on the time required for review of submittals.

§ 3.10.3 The Contractor shall perform the Work in general accordance with the most recent schedules submitted to the Owner and Architect.

§ 3.10.4 This paragraph is supplemented by Division 1 specifications.

§ 3.11 Documents and Samples at the Site

The Contractor shall make available, at the Project site, the Contract Documents, including Change Orders, Construction Change Directives, and other Modifications, in good order and marked currently to indicate field changes and selections made during construction, and the approved Shop Drawings, Product Data, Samples, and similar required submittals. These shall be in electronic form or paper copy, available to the Architect and Owner, and delivered to the Architect for submittal to the Owner upon completion of the Work as a record of the Work as constructed.

§ 3.12 Shop Drawings, Product Data and Samples

§ 3.12.1 Shop Drawings are drawings, diagrams, schedules, and other data specially prepared for the Work by the Contractor or a Subcontractor, Sub-subcontractor, manufacturer, supplier, or distributor to illustrate some portion of the Work.

§ 3.12.2 Product Data are illustrations, standard schedules, performance charts, instructions, brochures, diagrams, and other information furnished by the Contractor to illustrate materials or equipment for some portion of the Work.

§ 3.12.3 Samples are physical examples that illustrate materials, equipment, or workmanship, and establish standards by which the Work will be judged.

§ 3.12.4 Shop Drawings, Product Data, Samples, and similar submittals are not Contract Documents. Their purpose is to demonstrate how the Contractor proposes to conform to the information given and the design concept expressed in the Contract Documents for those portions of the Work for which the Contract Documents require submittals. Review by the Architect is subject to the limitations of Section 4.2.7. Informational submittals upon which the Architect is not expected to take responsive action may be so identified in the Contract Documents. Submittals that are not required by the Contract Documents may be returned by the Architect without action.

§ 3.12.5 The Contractor shall review for compliance with the Contract Documents, approve, and submit to the Architect, Shop Drawings, Product Data, Samples, and similar submittals required by the Contract Documents, in accordance with the submittal schedule approved by the Architect or, in the absence of an approved submittal schedule, with reasonable promptness and in such sequence as to cause no delay in the Work or in the activities of the Owner or of Separate Contractors.

§ 3.12.6 By submitting Shop Drawings, Product Data, Samples, and similar submittals, the Contractor represents to the Owner and Architect that the Contractor has (1) reviewed and approved them, (2) determined and verified materials, field measurements and field construction criteria related thereto, or will do so, and (3) checked and coordinated the information contained within such submittals with the requirements of the Work and of the Contract Documents.

§ 3.12.7 The Contractor shall perform no portion of the Work for which the Contract Documents require submittal and review of Shop Drawings, Product Data, Samples, or similar submittals, until the respective submittal has been approved by the Architect.

AIA Document A201® – 2017. Copyright © 1911, 1915, 1918, 1925, 1937, 1951, 1958, 1961, 1963, 1966, 1970, 1976, 1987, 1997, 2007 and 2017 by The American Institute of Architects. All rights reserved. The "American Institute of Architects," "AIA," the AIA Logo, "A201," and "AIA Contract Documents" are registered trademarks and may not be used without permission. This document is not an original AIA® Contract Document, but a template produced by AIA® Contract Documents software for producing a customized document.

§ 3.12.8 The Work shall be in accordance with approved submittals except that the Contractor shall not be relieved of responsibility for deviations from the requirements of the Contract Documents by the Architect's approval of Shop Drawings, Product Data, Samples, or similar submittals, unless the Contractor has specifically notified the Architect of such deviation at the time of submittal and (1) the Architect has given written approval to the specific deviation as a minor change in the Work, or (2) a Change Order or Construction Change Directive has been issued authorizing the deviation. The Contractor shall not be relieved of responsibility for errors or omissions in Shop Drawings, Product Data, Samples, or similar submittals, by the Architect's approval thereof.

§ 3.12.9 The Contractor shall direct specific attention, in writing or on resubmitted Shop Drawings, Product Data, Samples, or similar submittals, to revisions other than those requested by the Architect on previous submittals. In the absence of such notice, the Architect's approval of a resubmission shall not apply to such revisions.

§ 3.12.10 The Contractor shall not be required to provide professional services that constitute the practice of architecture or engineering unless such services are specifically required by the Contract Documents for a portion of the Work or unless the Contractor needs to provide such services in order to carry out the Contractor's responsibilities for construction means, methods, techniques, sequences, and procedures. The Contractor shall not be required to provide professional services in violation of applicable law.

§ 3.12.10.1 If professional design services or certifications by a design professional related to systems, materials, or equipment are specifically required of the Contractor by the Contract Documents, the Owner and the Architect will specify all performance and design criteria that such services must satisfy. The Contractor shall be entitled to rely upon the adequacy and accuracy of the performance and design criteria provided in the Contract Documents. The Contractor shall cause such services or certifications to be provided by an appropriately licensed design professional, whose signature and seal shall appear on all drawings, calculations, specifications, certifications, Shop Drawings, and other submittals prepared by such professional. Shop Drawings, and other submittals related to the Work, designed or certified by such professional, if prepared by others, shall bear such professional's written approval when submitted to the Architect. The Owner and the Architect shall be entitled to rely upon the adequacy and accuracy of the services, certifications, and approvals performed or provided by such design professionals, provided the Owner and Architect have specified to the Contractor the performance and design criteria that such services must satisfy. Pursuant to this Section 3.12.10, the Architect will review and approve or take other appropriate action on submittals only for the limited purpose of checking for conformance with information given and the design concept expressed in the Contract Documents.

§ 3.12.10.2 If the Contract Documents require the Contractor's design professional to certify that the Work has been performed in accordance with the design criteria, the Contractor shall furnish such certifications to the Architect at the time and in the form specified by the Architect.

§ 3.12.11 This paragraph is supplemented by Division 1 specifications.

§ 3.13 Use of Site

The Contractor shall confine operations at the site to areas permitted by applicable laws, statutes, ordinances, codes, rules and regulations, lawful orders of public authorities, and the Contract Documents and shall not unreasonably encumber the site with materials or equipment.

§ 3.14 Cutting and Patching

§ 3.14.1 The Contractor shall be responsible for cutting, fitting, or patching required to complete the Work or to make its parts fit together properly. All areas requiring cutting, fitting, or patching shall be restored to the condition existing prior to the cutting, fitting, or patching, unless otherwise required by the Contract Documents.

§ 3.14.2 The Contractor shall not damage or endanger a portion of the Work or fully or partially completed construction of the Owner or Separate Contractors by cutting, patching, or otherwise altering such construction, or by excavation. The Contractor shall not cut or otherwise alter construction by the Owner or a Separate Contractor except with written consent of the Owner and of the Separate Contractor. Consent shall not be unreasonably withheld. The Contractor shall not unreasonably withhold, from the Owner or a Separate Contractor, its consent to cutting or otherwise altering the Work.

AIA Document A201® – 2017. Copyright © 1911, 1915, 1918, 1925, 1937, 1951, 1958, 1961, 1963, 1966, 1970, 1976, 1987, 1997, 2007 and 2017 by The American Institute of Architects. All rights reserved. The "American Institute of Architects," "AIA," the AIA Logo, "A201," and "AIA Contract Documents" are registered trademarks and may not be used without permission. This document is not an original AIA® Contract Document, but a template produced by AIA® Contract Documents software for producing a customized document.

§ 3.15 Cleaning Up

§ 3.15.1 The Contractor shall keep the premises and surrounding area free from accumulation of waste materials and rubbish caused by operations under the Contract. At completion of the Work, the Contractor shall remove waste materials, rubbish, the Contractor's tools, construction equipment, machinery, and surplus materials from and about the Project.

§ 3.15.2 If the Contractor fails to clean up as provided in the Contract Documents, the Owner may do so and the Owner shall be entitled to reimbursement from the Contractor.

§3.15.3 This paragraph is supplemented by Division 1 specifications.

§ 3.16 Access to Work

The Contractor shall provide the Owner and Architect with access to the Work in preparation and progress wherever located.

§ 3.17 Royalties, Patents and Copyrights

The Contractor shall pay all royalties and license fees. The Contractor shall defend suits or claims for infringement of copyrights and patent rights and shall hold the Owner and Architect harmless from loss on account thereof, but shall not be responsible for defense or loss when a particular design, process, or product of a particular manufacturer or manufacturers is required by the Contract Documents, or where the copyright violations are contained in Drawings, Specifications, or other documents prepared by the Owner or Architect. However, if an infringement of a copyright or patent is discovered by, or made known to, the Contractor, the Contractor shall be responsible for the loss unless the information is promptly furnished to the Architect.

§ 3.18 Indemnification

§ 3.18.1 To the fullest extent permitted by law, and not without standing the limits of any insurance provided or maintained by the Contractor, the Contractor shall defend, indemnify, and hold harmless the Owner, Architect, Architect's Consultants and officers, employees, members and agents of any of them from and against all claims, actions, liabilities, damages, and costs (including but not limited to, attorneys fees) of every nature and description arising out of or resulting from the acts, omissions, or negligence of the Contractor or his employees or agents or by anyone directly or indirectly employed by the Contractor or anyone for whose acts the Contractor may be liable. The Contractor's duties and obligations pursuant to this subparagraph shall survive the termination or expiration of this agreement and shall not be limited by an provision herein requiring the Contractor to maintain specific insurance coverages.**§ 3.18.2** In claims against any person or entity indemnified under this Section 3.18 by an employee of the Contractor, a Subcontractor, anyone directly or indirectly employed by them, or anyone for whose acts they may be liable, the indemnification obligation under Section 3.18.1 shall not be limited by a limitation on amount or type of damages, compensation, or benefits payable by or for the Contractor or a Subcontractor under workers' compensation acts, disability benefit acts, or other employee benefit acts.

ARTICLE 4 ARCHITECT

§ 4.1 General

§ 4.1.1 The Architect is the person or entity retained by the Owner pursuant to Section 2.3.2 and identified as such in the Agreement.

§ 4.1.2 Duties, responsibilities, and limitations of authority of the Architect as set forth in the Contract Documents shall not be restricted, modified, or extended without written consent of the Owner, Contractor, and Architect. Consent shall not be unreasonably withheld.

§ 4.2 Services of The Architect

§ 4.2.1 The Architect will provide professional services as described in the Contract Documents and will be an Owner's representative during construction until the date the Architect issues the final Certificate for Payment. The Architect will have authority to act on behalf of the Owner only to the extent provided in the Contract Documents.

AIA Document A201® – 2017. Copyright © 1911, 1915, 1918, 1925, 1937, 1951, 1958, 1961, 1963, 1966, 1970, 1976, 1987, 1997, 2007 and 2017 by The American Institute of Architects. All rights reserved. The "American Institute of Architects," "AIA," the AIA Logo, "A201," and "AIA Contract Documents" are registered trademarks and may not be used without permission. This document is not an original AIA® Contract Document, but a template produced by AIA® Contract Documents software for producing a customized document.

§ 4.2.2 The Architect will visit the site at intervals appropriate to the stage of construction, or as otherwise agreed with the Owner, to become generally familiar with the progress and quality of the portion of the Work completed, and to determine in general if the Work observed is being performed in a manner indicating that the Work, when fully completed, will be in accordance with the Contract Documents. However, the Architect will not be required to make exhaustive or continuous on-site inspections to check the quality or quantity of the Work. The Architect will not have control over, charge of, or responsibility for the construction means, methods, techniques, sequences or procedures, or for the safety precautions and programs in connection with the Work, since these are solely the Contractor's rights and responsibilities under the Contract Documents.

§ 4.2.3 On the basis of the site visits, the Architect will keep the Owner reasonably informed about the progress and quality of the portion of the Work completed, and promptly report to the Owner (1) known deviations from the Contract Documents, (2) known deviations from the most recent construction schedule submitted by the Contractor, and (3) defects and deficiencies observed in the Work. The Architect will not be responsible for the Contractor's failure to perform the Work in accordance with the requirements of the Contract Documents. The Architect will not have control over or charge of, and will not be responsible for acts or omissions of, the Contractor, Subcontractors, or their agents or employees, or any other persons or entities performing portions of the Work.

§ 4.2.4 Communications

The Owner and Contractor shall include the Architect in all communications that relate to or affect the Architect's services or professional responsibilities. The Owner shall promptly notify the Architect of the substance of any direct communications between the Owner and the Contractor otherwise relating to the Project. Communications by and with the Architect's consultants shall be through the Architect. Communications by and with Subcontractors and suppliers shall be through the Contractor. Communications by and with Separate Contractors shall be through the Owner. The Contract Documents may specify other communication protocols.

§ 4.2.5 Based on the Architect's evaluations of the Contractor's Applications for Payment, the Architect will review and certify the amounts due the Contractor and will issue Certificates for Payment in such amounts.

§ 4.2.6 The Architect has authority to reject Work that does not conform to the Contract Documents. Whenever the Architect considers it necessary or advisable, the Architect will have authority to require inspection or testing of the Work in accordance with Sections 13.4.2 and 13.4.3, whether or not the Work is fabricated, installed or completed. However, neither this authority of the Architect nor a decision made in good faith either to exercise or not to exercise such authority shall give rise to a duty or responsibility of the Architect to the Contractor, Subcontractors, suppliers, their agents or employees, or other persons or entities performing portions of the Work.

§ 4.2.7 The Architect will review and approve, or take other appropriate action upon, the Contractor's submittals such as Shop Drawings, Product Data, and Samples, but only for the limited purpose of checking for conformance with information given and the design concept expressed in the Contract Documents. The Architect's action will be taken in accordance with the submittal schedule approved by the Architect or, in the absence of an approved submittal schedule, with reasonable promptness while allowing sufficient time in the Architect's professional judgment to permit adequate review. Review of such submittals is not conducted for the purpose of determining the accuracy and completeness of other details such as dimensions and quantities, or for substantiating instructions for installation or performance of equipment or systems, all of which remain the responsibility of the Contractor as required by the Contract Documents. The Architect's review of the Contractor's submittals shall not relieve the Contractor of the obligations under Sections 3.3, 3.5, and 3.12. The Architect's review shall not constitute approval of safety precautions or of any construction means, methods, techniques, sequences, or procedures. The Architect's approval of a specific item shall not indicate approval of an assembly of which the item is a component.

§ 4.2.8 The Architect will prepare Change Orders and Construction Change Directives, and may order minor changes in the Work as provided in Section 7.4. The Architect will investigate and make determinations and recommendations regarding concealed and unknown conditions as provided in Section 3.7.4.

§ 4.2.9 The Architect will conduct inspections to determine the date or dates of Substantial Completion and the date of final completion; issue Certificates of Substantial Completion pursuant to Section 9.8; receive and forward to the Owner, for the Owner's review and records, written warranties and related documents required by the Contract and assembled by the Contractor pursuant to Section 9.10; and issue a final Certificate for Payment pursuant to Section 9.10.

AIA Document A201® – 2017. Copyright © 1911, 1915, 1918, 1925, 1937, 1951, 1958, 1961, 1963, 1966, 1970, 1976, 1987, 1997, 2007 and 2017 by The American Institute of Architects. All rights reserved. The "American Institute of Architects," "AIA," the AIA Logo, "A201," and "AIA Contract Documents" are registered trademarks and may not be used without permission. This document is not an original AIA® Contract Document, but a template produced by AIA® Contract Documents software for producing a customized document.

§ 4.2.10 If the Owner and Architect agree, the Architect will provide one or more Project representatives to assist in carrying out the Architect's responsibilities at the site. The Owner shall notify the Contractor of any change in the duties, responsibilities and limitations of authority of the Project representatives.

§ 4.2.11 The Architect will interpret and decide matters concerning performance under, and requirements of, the Contract Documents on written request of either the Owner or Contractor. The Architect's response to such requests will be made in writing within any time limits agreed upon or otherwise with reasonable promptness.

§ 4.2.12 Interpretations and decisions of the Architect will be consistent with the intent of, and reasonably inferable from, the Contract Documents and will be in writing or in the form of drawings. When making such interpretations and decisions, the Architect will not show partiality to either the Owner or Contractor, and will not be liable for results of interpretations or decisions so rendered in good faith.

§ 4.2.13 The Architect's decisions on matters relating to aesthetic effect will be final if consistent with the intent expressed in the Contract Documents.

§ 4.2.14 The Architect will review and respond to requests for information about the Contract Documents. The Architect's response to such requests will be made in writing within any time limits agreed upon or otherwise with reasonable promptness. If appropriate, the Architect will prepare and issue supplemental Drawings and Specifications in response to the requests for information.

ARTICLE 5 SUBCONTRACTORS

§ 5.1 Definitions

§ 5.1.1. A Subcontractor is any person or entity who has a direct contract with the Contractor to perform any portion of the Work. The term "Subcontractor" is referred to throughout the Contract Documents as if singular in number and means a Subcontractor or an authorized representative of the Subcontractor. The term "Subcontractor" does not include a Separate Contractor or the subcontractors of a Separate Contractor.

§ 5.1.2 A Sub-subcontractor is a person or entity who has a direct or indirect contract with a Subcontractor to perform a portion of the Work at the site. The term "Sub-subcontractor" is referred to throughout the Contract Documents as if singular in number and means a Sub-subcontractor or an authorized representative of the Sub-subcontractor.

§ 5.2 Award of Subcontracts and Other Contracts for Portions of the Work

§ 5.2.1 Unless otherwise stated in the Contract Documents, the Contractor, as soon as practicable after award of the Contract, shall notify the Owner and Architect of the persons or entities proposed for each principal portion of the Work, including those who are to furnish materials or equipment fabricated to a special design. Within 14 days of receipt of the information, the Architect may notify the Contractor whether the Owner or the Architect (1) has reasonable objection to any such proposed person or entity or (2) requires additional time for review. Failure of the Owner or Architect to provide notice within the 14-day period shall constitute notice of no reasonable objection.

§ 5.2.2 The Contractor shall not contract with a proposed person or entity to whom the Owner or Architect has made reasonable and timely objection. The Contractor shall not be required to contract with anyone to whom the Contractor has made reasonable objection.

§ 5.2.3 If the Owner or Architect has reasonable objection to a person or entity proposed by the Contractor, the Contractor shall propose another to whom the Owner or Architect has no reasonable objection. If the proposed but rejected Subcontractor was reasonably capable of performing the Work, the Contract Sum and Contract Time shall be increased or decreased by the difference, if any, occasioned by such change, and an appropriate Change Order shall be issued before commencement of the substitute Subcontractor's Work. However, no increase in the Contract Sum or Contract Time shall be allowed for such change unless the Contractor has acted promptly and responsively in submitting names as required.

§ 5.2.4 The Contractor shall not substitute a Subcontractor, person, or entity for one previously selected if the Owner or Architect makes reasonable objection to such substitution.

AIA Document A201® – 2017. Copyright © 1911, 1915, 1918, 1925, 1937, 1951, 1958, 1961, 1963, 1966, 1970, 1976, 1987, 1997, 2007 and 2017 by The American Institute of Architects. All rights reserved. The "American Institute of Architects," "AIA," the AIA Logo, "A201," and "AIA Contract Documents" are registered trademarks and may not be used without permission. This document is not an original AIA® Contract Document, but a template produced by AIA® Contract Documents software for producing a customized document.

§ 5.3 Subcontractual Relations

By appropriate written agreement, the Contractor shall require each Subcontractor, to the extent of the Work to be performed by the Subcontractor, to be bound to the Contractor by terms of the Contract Documents, and to assume toward the Contractor all the obligations and responsibilities, including the responsibility for safety of the Subcontractor's Work that the Contractor, by these Contract Documents, assumes toward the Owner and Architect. Each subcontract agreement shall preserve and protect the rights of the Owner and Architect under the Contract Documents with respect to the Work to be performed by the Subcontractor so that subcontracting thereof will not prejudice such rights, and shall allow to the Subcontractor, unless specifically provided otherwise in the subcontract agreement, the benefit of all rights, remedies, and redress against the Contractor that the Contractor, by the Contract Documents, has against the Owner. Where appropriate, the Contractor shall require each Subcontractor to enter into similar agreements with Sub-subcontractors. The Contractor shall make available to each proposed Subcontractor, prior to the execution of the subcontract agreement, copies of the Contract Documents to which the Subcontractor will be bound, and, upon written request of the Subcontractor, identify to the Subcontractor terms and conditions of the proposed subcontract agreement that may be at variance with the Contract Documents. Subcontractors will similarly make copies of applicable portions of such documents available to their respective proposed Sub-subcontractors.

§ 5.4 Contingent Assignment of Subcontracts

§ 5.4.1 Each subcontract agreement for a portion of the Work is assigned by the Contractor to the Owner, provided that

.1 assignment is effective only after termination of the Contract by the Owner for cause pursuant to Section 14.2 and only for those subcontract agreements that the Owner accepts by notifying the Subcontractor and Contractor; and

.2 assignment is subject to the prior rights of the surety, if any, obligated under bond relating to the Contract.

When the Owner accepts the assignment of a subcontract agreement, the Owner assumes the Contractor's rights and obligations under the subcontract.

§ 5.4.2 Upon such assignment, if the Work has been suspended for more than 30 days, the Subcontractor's compensation shall be equitably adjusted for increases in cost resulting from the suspension.

§ 5.4.3 Upon assignment to the Owner under this Section 5.4, the Owner may further assign the subcontract to a successor contractor or other entity. If the Owner assigns the subcontract to a successor contractor or other entity, the Owner shall nevertheless remain legally responsible for all of the successor contractor's obligations under the subcontract.

ARTICLE 6 CONSTRUCTION BY OWNER OR BY SEPARATE CONTRACTORS

§ 6.1 Owner's Right to Perform Construction and to Award Separate Contracts

§ 6.1.1 The term "Separate Contractor(s)" shall mean other contractors retained by the Owner under separate agreements. The Owner reserves the right to perform construction or operations related to the Project with the Owner's own forces, and with Separate Contractors retained under Conditions of the Contract substantially similar to those of this Contract, including those provisions of the Conditions of the Contract related to insurance and waiver of subrogation.

§ 6.1.2 When separate contracts are awarded for different portions of the Project or other construction or operations on the site, the term "Contractor" in the Contract Documents in each case shall mean the Contractor who executes each separate Owner-Contractor Agreement.

§ 6.1.3 The Owner shall provide for coordination of the activities of the Owner's own forces and of each Separate Contractor with the Work of the Contractor, who shall cooperate with them. The Contractor shall participate with any Separate Contractors and the Owner in reviewing their construction schedules. The Contractor shall make any revisions to its construction schedule deemed necessary after a joint review and mutual agreement. The construction schedules shall then constitute the schedules to be used by the Contractor, Separate Contractors, and the Owner until subsequently revised.

AIA Document A201® – 2017. Copyright © 1911, 1915, 1918, 1925, 1937, 1951, 1958, 1961, 1963, 1966, 1970, 1976, 1987, 1997, 2007 and 2017 by The American Institute of Architects. All rights reserved. The "American Institute of Architects," "AIA," the AIA Logo, "A201," and "AIA Contract Documents" are registered trademarks and may not be used without permission. This document is not an original AIA® Contract Document, but a template produced by AIA® Contract Documents software for producing a customized document.

§ 6.1.4 Unless otherwise provided in the Contract Documents, when the Owner performs construction or operations related to the Project with the Owner's own forces or with Separate Contractors, the Owner or its Separate Contractors shall have the same obligations and rights that the Contractor has under the Conditions of the Contract, including, without excluding others, those stated in Article 3, this Article 6, and Articles 10, 11, and 12.

§ 6.2 Mutual Responsibility

§ 6.2.1 The Contractor shall afford the Owner and Separate Contractors reasonable opportunity for introduction and storage of their materials and equipment and performance of their activities, and shall connect and coordinate the Contractor's construction and operations with theirs as required by the Contract Documents.

§ 6.2.2 If part of the Contractor's Work depends for proper execution or results upon construction or operations by the Owner or a Separate Contractor, the Contractor shall, prior to proceeding with that portion of the Work, promptly notify the Architect of apparent discrepancies or defects in the construction or operations by the Owner or Separate Contractor that would render it unsuitable for proper execution and results of the Contractor's Work. Failure of the Contractor to notify the Architect of apparent discrepancies or defects prior to proceeding with the Work shall constitute an acknowledgment that the Owner's or Separate Contractor's completed or partially completed construction is fit and proper to receive the Contractor's Work. The Contractor shall not be responsible for discrepancies or defects in the construction or operations by the Owner or Separate Contractor that are not apparent.

§ 6.2.3 The Contractor shall reimburse the Owner for costs the Owner incurs that are payable to a Separate Contractor because of the Contractor's delays, improperly timed activities or defective construction. The Owner shall be responsible to the Contractor for costs the Contractor incurs because of a Separate Contractor's delays, improperly timed activities, damage to the Work or defective construction.

§ 6.2.4 The Contractor shall promptly remedy damage that the Contractor wrongfully causes to completed or partially completed construction or to property of the Owner or Separate Contractor as provided in Section 10.2.5.

§ 6.2.5 The Owner and each Separate Contractor shall have the same responsibilities for cutting and patching as are described for the Contractor in Section 3.14.

§ 6.3 Owner's Right to Clean Up

If a dispute arises among the Contractor, Separate Contractors, and the Owner as to the responsibility under their respective contracts for maintaining the premises and surrounding area free from waste materials and rubbish, the Owner may. elect to complete such clean up with his own forces, or to contract with others for this service, either on a specific occasion, or for the balance of the project. In either event, the Architect shall determine, at his sole discretion, what portion of these costs shall be back charged to each Contractor.

ARTICLE 7 CHANGES IN THE WORK

§ 7.1 General

§ 7.1.1 Changes in the Work may be accomplished after execution of the Contract, and without invalidating the Contract, by Change Order, Construction Change Directive or order for a minor change in the Work, subject to the limitations stated in this Article 7 and elsewhere in the Contract Documents.

§ 7.1.2 A Change Order shall be based upon agreement among the Owner, Contractor, and Architect. A Construction Change Directive requires agreement by the Owner and Architect and may or may not be agreed to by the Contractor. An order for a minor change in the Work may be issued by the Architect alone.

§ 7.1.3 Changes in the Work shall be performed under applicable provisions of the Contract Documents. The Contractor shall proceed promptly with changes in the Work, unless otherwise provided in the Change Order, Construction Change Directive, or order for a minor change in the Work.

§ 7.2 Change Orders

§ 7.2.1 A Change Order is a written instrument prepared by the Architect and signed by the Owner, Contractor, and Architect stating their agreement upon all of the following:

.1 The change in the Work;

.2 The amount of the adjustment, if any, in the Contract Sum; and

AIA Document A201® – 2017. Copyright © 1911, 1915, 1918, 1925, 1937, 1951, 1958, 1961, 1963, 1966, 1970, 1976, 1987, 1997, 2007 and 2017 by The American Institute of Architects. All rights reserved. The "American Institute of Architects," "AIA," the AIA Logo, "A201," and "AIA Contract Documents" are registered trademarks and may not be used without permission. This document is not an original AIA® Contract Document, but a template produced by AIA® Contract Documents software for producing a customized document.

.3 The extent of the adjustment, if any, in the Contract Time.

§ 7.3 Construction Change Directives

§ 7.3.1 A Construction Change Directive is a written order prepared by the Architect and signed by the Owner and Architect, directing a change in the Work prior to agreement on adjustment, if any, in the Contract Sum or Contract Time, or both. The Owner may by Construction Change Directive, without invalidating the Contract, order changes in the Work within the general scope of the Contract consisting of additions, deletions, or other revisions, the Contract Sum and Contract Time being adjusted accordingly.

§ 7.3.2 A Construction Change Directive shall be used in the absence of total agreement on the terms of a Change Order.

§ 7.3.3 If the Construction Change Directive provides for an adjustment to the Contract Sum, the adjustment shall be based on one of the following methods:

.1 Mutual acceptance of a lump sum properly itemized and supported by sufficient substantiating data to permit evaluation;

.2 Unit prices stated in the Contract Documents or subsequently agreed upon;

.3 Cost to be determined in a manner agreed upon by the parties and a mutually acceptable fixed or percentage fee; or

.4 As provided in Section 7.3.4.

§ 7.3.4 If non of the methods set forth in clauses 7.3.3.1. 7.3.3.2 or 7.3.3.3 are agreed upon for determining the cost or credit to the Owner resulting from a change in the work, the cost or credit shall be determined as follows:

§ 7.3.4.1 For changes resulting in additional cost to the Owner, the cost shall be the actual computed cost and shall include the following:

.1 Labor, including foreman, (including Supplements).

.2 Materials entering permanently into the work.

.3 Use of equipment employed directly on the work.

.4 Power and consumable supplies for the operation of power equipment..5 Insurance (Workmen's Compensation, Social Security and Unemployment Insurance).

.6 Sales taxes and other local taxes (if applicable).

.7 For work performed by the Contractor with his own forces, there shall be added a percentage fee for the Contractor equal to 10 percent of items. (.1) through (.5) above.

.8 For work performed by a Subcontractor, there shall be added a percentage fee for the Subcontractor equal to 10 percent of items (.1) through (.5) above. To this total amount there shall be added an additional percentage fee of 5 percent for the Contractor.

.9 The percentage fee shall be compensation to cover the cost of supervision, overhead, profit and any other general expenses, which are not included in the cost of the work as defined above. Bond costs shall be added or deducted from total cost of the change directive.

.10 The percentage fees as indicated herein shall also apply to Sub-Paragraph 7.3.3

.11 Nothing in this article shall excuse the Contractor from proceeding with the extra work as directed..

.12 If Contractors are requested to submit lump sum proposal for extra work, such proposals shall include a detailed breakdown for all labor, materials and equipment including a breakdown of subcontractors' prices.

§ 7.3.4.2 For changes resulting in a credit to the Owner, the cost shall be the estimated costs as they would have been expended according to 7.3.4.1, or the value or prorated value of said work submitted in the Contractor's Schedule of Values, whichever is greater

§ 7.3.5 If the Contractor disagrees with the adjustment in the Contract Time, the Contractor may make a Claim in accordance with applicable provisions of Article 15.

§ 7.3.6 Upon receipt of a Construction Change Directive, the Contractor shall promptly proceed with the change in the Work involved and advise the Architect of the Contractor's agreement or disagreement with the method, if any,

AIA Document A201® – 2017. Copyright © 1911, 1915, 1918, 1925, 1937, 1951, 1958, 1961, 1963, 1966, 1970, 1976, 1987, 1997, 2007 and 2017 by The American Institute of Architects. All rights reserved. The "American Institute of Architects," "AIA," the AIA Logo, "A201," and "AIA Contract Documents" are registered trademarks and may not be used without permission. This document is not an original AIA® Contract Document, but a template produced by AIA® Contract Documents software for producing a customized document.

provided in the Construction Change Directive for determining the proposed adjustment in the Contract Sum or Contract Time.

§ 7.3.7 A Construction Change Directive signed by the Contractor indicates the Contractor's agreement therewith, including adjustment in Contract Sum and Contract Time or the method for determining them. Such agreement shall be effective immediately and shall be recorded as a Change Order.

§ 7.3.8 The amount of credit to be allowed by the Contractor to the Owner for a deletion or change that results in a net decrease in the Contract Sum shall be actual net cost as confirmed by the Architect. When both additions and credits covering related Work or substitutions are involved in a change, the allowance for overhead and profit shall be figured on the basis of net increase, if any, with respect to that change.

§ 7.3.9 Pending final determination of the total cost of a Construction Change Directive to the Owner, the Contractor may request payment for Work completed under the Construction Change Directive in Applications for Payment. The Architect will make an interim determination for purposes of monthly certification for payment for those costs and certify for payment the amount that the Architect determines, in the Architect's professional judgment, to be reasonably justified. The Architect's interim determination of cost shall adjust the Contract Sum on the same basis as a Change Order, subject to the right of either party to disagree and assert a Claim in accordance with Article 15.

§ 7.3.10 When the Owner and Contractor agree with a determination made by the Architect concerning the adjustments in the Contract Sum and Contract Time, or otherwise reach agreement upon the adjustments, such agreement shall be effective immediately and the Architect will prepare a Change Order. Change Orders may be issued for all or any part of a Construction Change Directive.

§ 7.4 Minor Changes in the Work

The Architect may order minor changes in the Work that are consistent with the intent of the Contract Documents and do not involve an adjustment in the Contract Sum or an extension of the Contract Time. The Architect's order for minor changes shall be in writing. If the Contractor believes that the proposed minor change in the Work will affect the Contract Sum or Contract Time, the Contractor shall notify the Architect and shall not proceed to implement the change in the Work. If the Contractor performs the Work set forth in the Architect's order for a minor change without prior notice to the Architect that such change will affect the Contract Sum or Contract Time, the Contractor waives any adjustment to the Contract Sum or extension of the Contract Time.

ARTICLE 8 TIME

§ 8.1 Definitions

§ 8.1.1 Unless otherwise provided, Contract Time is the period of time, including authorized adjustments, allotted in the Contract Documents for Substantial Completion of the Work.

§ 8.1.2 The date of commencement of the Work is the date established in the Agreement.

§ 8.1.3 The date of Substantial Completion is the date certified by the Architect in accordance with Section 9.8.

§ 8.1.4 The term "day" as used in the Contract Documents shall mean calendar day unless otherwise specifically defined.

§ 8.2 Progress and Completion

§ 8.2.1 Time limits stated in the Contract Documents are of the essence of the Contract. By executing the Agreement, the Contractor confirms that the Contract Time is a reasonable period for performing the Work.

§ 8.2.2 The Contractor shall not knowingly, except by agreement or instruction of the Owner in writing, commence the Work prior to the effective date of insurance required to be furnished by the Contractor and Owner.

§ 8.2.3 The Contractor shall proceed expeditiously with adequate forces and shall achieve Substantial Completion within the Contract Time.

AIA Document A201® – 2017. Copyright © 1911, 1915, 1918, 1925, 1937, 1951, 1958, 1961, 1963, 1966, 1970, 1976, 1987, 1997, 2007 and 2017 by The American Institute of Architects. All rights reserved. The "American Institute of Architects," "AIA," the AIA Logo, "A201," and "AIA Contract Documents" are registered trademarks and may not be used without permission. This document is not an original AIA® Contract Document, but a template produced by AIA® Contract Documents software for producing a customized document.

§ 8.3 Delays and Extensions of Time

§ 8.3.1 If the Contractor is delayed at any time in the commencement or progress of the Work by (1) an act or neglect of the Owner or Architect, of an employee of either, or of a Separate Contractor; (2) by changes ordered in the Work; (3) by labor disputes, fire, unusual delay in deliveries, unavoidable casualties, adverse weather conditions documented in accordance with Section 15.1.6.2, or other causes beyond the Contractor's control; (4) by delay authorized by the Owner pending mediation and/or binding dispute resolution; or (5) by other causes that the Contractor asserts, and the Architect determines, justify delay, then the Contract Time shall be extended for such reasonable time as the Architect may determine. If however, such delays are deemed to be the responsibility of the Contractor, then, in addition to any other remedy the Owner may seek, compensation for the Architect's services and expenses made necessary thereby shall be at the Contractor's expense.

§ 8.3.2 Claims relating to time shall be made in accordance with applicable provisions of Article 15.

§ 8.3.3 This Section 8.3 does not preclude recovery of damages for delay by either party under other provisions of the Contract Documents.

ARTICLE 9 PAYMENTS AND COMPLETION

§ 9.1 Contract Sum

§ 9.1.1 The Contract Sum is stated in the Agreement and, including authorized adjustments, is the total amount payable by the Owner to the Contractor for performance of the Work under the Contract Documents.

§ 9.1.2 If unit prices are stated in the Contract Documents or subsequently agreed upon, and if quantities originally contemplated are materially changed so that application of such unit prices to the actual quantities causes substantial inequity to the Owner or Contractor, the applicable unit prices shall be equitably adjusted.

§ 9.2 Schedule of Values

Where the Contract is based on a stipulated sum or Guaranteed Maximum Price, the Contractor shall submit a schedule of values to the Architect before the first Application for Payment, allocating the entire Contract Sum to the various portions of the Work. The schedule of values shall be prepared in the form, and supported by the data to substantiate its accuracy, required by the Architect. This schedule, unless objected to by the Architect, shall be used as a basis for reviewing the Contractor's Applications for Payment. Any changes to the schedule of values shall be submitted to the Architect and supported by such data to substantiate its accuracy as the Architect may require, and unless objected to by the Architect, shall be used as a basis for reviewing the Contractor's subsequent Applications for Payment.

§ 9.3 Applications for Payment

§ 9.3.1 At least ten days before the date established for each progress payment, the Contractor shall submit to the Architect an itemized Application for Payment prepared in accordance with the schedule of values, if required under Section 9.2, for completed portions of the Work. The application shall be notarized, if required, and supported by all data substantiating the Contractor's right to payment that the Owner or Architect require, such as copies of requisitions, and releases and waivers of liens from Subcontractors and suppliers, and shall reflect retainage if provided for in the Contract Documents.

§ 9.3.1.1 As provided in Section 7.3.9, such applications may include requests for payment on account of changes in the Work that have been properly authorized by Construction Change Directives, or by interim determinations of the Architect, but not yet included in Change Orders.

§ 9.3.1.2 Applications for Payment shall not include requests for payment for portions of the Work for which the Contractor does not intend to pay a Subcontractor or supplier, unless such Work has been performed by others whom the Contractor intends to pay.

§ 9.3.1.3 Each application for payment shall include such instruments, evidence, and materials as the Owner, Owner's lender, or the title insurer shall require, including, without limitation, such requisition forms, disbursement requests, indemnities (including evidence of All Risk physical damage insurance coverage on materials and equipment stored off-site), and undertakings as they may specify and an estimate of the total labor done and materials stored at the site (or other location approved in writing by the Owner) or installed in the building, less costs for payment which has been made, and also less retainage specified in 9.6.3. All Applications for Payment shall be made on and in compliance with AIA Form

AIA Document A201® – 2017. Copyright © 1911, 1915, 1918, 1925, 1937, 1951, 1958, 1961, 1963, 1966, 1970, 1976, 1987, 1997, 2007 and 2017 by The American Institute of Architects. All rights reserved. The "American Institute of Architects," "AIA," the AIA Logo, "A201," and "AIA Contract Documents" are registered trademarks and may not be used without permission. This document is not an original AIA® Contract Document, but a template produced by AIA® Contract Documents software for producing a customized document.

G702, current edition, unless otherwise specifically defined. Owner will advise Contractor in advance of what documentation it, its lender, or the title insurer will require with each payment application. Contractor shall supply such additional documentation and information as Owner's lender or its inspecting architect shall request in connection with each disbursement to the Contractor. Each application for payment shall be accompanied by the following, all in form and substance satisfactory to the Owner:

.1 A current Contractor's lien waiver and duly executed and acknowledged sworn statement showing all Subcontractors and materialmen with whom the Contractor has entered in subcontracts, the amount of each subcontract, the amount requested for any Subcontractor and materialmen in the requested progress payment and the amount to be paid to the Contractor for such progress payment, together with similar sworn statements from all such Subcontractors and materialmen;

.2 Duly executed waivers of mechanic's lien and materialmen's liens from all Subcontractors and, when appropriate, from materialmen and lower tier Subcontractors establishing payment or satisfaction of payment of all amounts requested by the Contractor on behalf of such entities or persons in any previous Application for Payment: and

.3 All information and materials required to comply with the requirements of the Contract Documents or reasonably requested by the Owner or the Architect.

§ 9.3.1.4 Contractors shall review a rough draft of each Application for Payment with the Owner's full time field representative and have it signed by him. The signed rough draft shall be submitted to the Architect along with the Application for Payment.

§ 9.3.1.5 Each application for payment shall include a copy of payroll records of the Contractor and Subcontractors for the period covered by the application for payment.

§ 9.3.2 Unless otherwise provided in the Contract Documents, payments shall be made on account of materials and equipment delivered and suitably stored at the site for subsequent incorporation in the Work. If approved in advance by the Owner, payment may similarly be made for materials and equipment suitably stored off the site at a location agreed upon in writing. Payment for materials and equipment stored on or off the site shall be conditioned upon compliance by the Contractor with procedures satisfactory to the Owner to establish the Owner's title to such materials and equipment or otherwise protect the Owner's interest, and shall include the costs of applicable insurance, storage, and transportation to the site, for such materials and equipment stored off the site.

§ 9.3.3 The Contractor warrants that title to all Work covered by an Application for Payment will pass to the Owner no later than the time of payment. The Contractor further warrants that upon submittal of an Application for Payment all Work for which Certificates for Payment have been previously issued and payments received from the Owner shall, to the best of the Contractor's knowledge, information, and belief, be free and clear of liens, claims, security interests, or encumbrances, in favor of the Contractor, Subcontractors, suppliers, or other persons or entities that provided labor, materials, and equipment relating to the Work.

§ 9.4 Certificates for Payment

§ 9.4.1 The Architect will, within seven days after receipt of the Contractor's Application for Payment, either (1) issue to the Owner a Certificate for Payment in the full amount of the Application for Payment, with a copy to the Contractor; or (2) issue to the Owner a Certificate for Payment for such amount as the Architect determines is properly due, and notify the Contractor and Owner of the Architect's reasons for withholding certification in part as provided in Section 9.5.1; or (3) withhold certification of the entire Application for Payment, and notify the Contractor and Owner of the Architect's reason for withholding certification in whole as provided in Section 9.5.1.

§ 9.4.2 The issuance of a Certificate for Payment will constitute a representation by the Architect to the Owner, based on the Architect's evaluation of the Work and the data in the Application for Payment, that, to the best of the Architect's knowledge, information, and belief, the Work has progressed to the point indicated, the quality of the Work is in accordance with the Contract Documents, and that the Contractor is entitled to payment in the amount certified. The foregoing representations are subject to an evaluation of the Work for conformance with the Contract Documents upon Substantial Completion, to results of subsequent tests and inspections, to correction of minor deviations from the Contract Documents prior to completion, and to specific qualifications expressed by the

AIA Document A201® – 2017. Copyright © 1911, 1915, 1918, 1925, 1937, 1951, 1958, 1961, 1963, 1966, 1970, 1976, 1987, 1997, 2007 and 2017 by The American Institute of Architects. All rights reserved. The "American Institute of Architects," "AIA," the AIA Logo, "A201," and "AIA Contract Documents" are registered trademarks and may not be used without permission. This document is not an original AIA® Contract Document, but a template produced by AIA® Contract Documents software for producing a customized document.

Architect. However, the issuance of a Certificate for Payment will not be a representation that the Architect has (1) made exhaustive or continuous on-site inspections to check the quality or quantity of the Work; (2) reviewed construction means, methods, techniques, sequences, or procedures; (3) reviewed copies of requisitions received from Subcontractors and suppliers and other data requested by the Owner to substantiate the Contractor's right to payment; or (4) made examination to ascertain how or for what purpose the Contractor has used money previously paid on account of the Contract Sum.

§ 9.5 Decisions to Withhold Certification

§ 9.5.1 The Architect may withhold a Certificate for Payment in whole or in part, to the extent reasonably necessary to protect the Owner, if in the Architect's opinion the representations to the Owner required by Section 9.4.2 cannot be made. If the Architect is unable to certify payment in the amount of the Application, the Architect will notify the Contractor and Owner as provided in Section 9.4.1. If the Contractor and Architect cannot agree on a revised amount, the Architect will promptly issue a Certificate for Payment for the amount for which the Architect is able to make such representations to the Owner. The Architect may also withhold a Certificate for Payment or, because of subsequently discovered evidence, may nullify the whole or a part of a Certificate for Payment previously issued, to such extent as may be necessary in the Architect's opinion to protect the Owner from loss for which the Contractor is responsible, including loss resulting from acts and omissions described in Section 3.3.2, because of

- **.1** defective Work not remedied;
- **.2** third party claims filed or reasonable evidence indicating probable filing of such claims, unless security acceptable to the Owner is provided by the Contractor;
- **.3** failure of the Contractor to make payments properly to Subcontractors or suppliers for labor, materials or equipment;
- **.4** reasonable evidence that the Work cannot be completed for the unpaid balance of the Contract Sum;
- **.5** damage to the Owner or a Separate Contractor;
- **.6** reasonable evidence that the Work will not be completed within the Contract Time, and that the unpaid balance would not be adequate to cover actual or liquidated damages for the anticipated delay; or
- **.7** repeated failure to carry out the Work in accordance with the Contract Documents.

§ 9.5.2 When either party disputes the Architect's decision regarding a Certificate for Payment under Section 9.5.1, in whole or in part, that party may submit a Claim in accordance with Article 15.

§ 9.5.3 When the reasons for withholding certification are removed, certification will be made for amounts previously withheld.

§ 9.5.4 If the Architect withholds certification for payment under Section 9.5.1.3, the Owner may, at its sole option, issue joint checks to the Contractor and to any Subcontractor or supplier to whom the Contractor failed to make payment for Work properly performed or material or equipment suitably delivered. If the Owner makes payments by joint check, the Owner shall notify the Architect and the Contractor shall reflect such payment on its next Application for Payment.

§ 9.6 Progress Payments

§ 9.6.1 After the Architect has issued a Certificate for Payment, the Owner shall make payment in the manner and within the time provided in the Contract Documents, and shall so notify the Architect.

§ 9.6.2 The Contractor shall pay each Subcontractor, no later than seven days after receipt of payment from the Owner, the amount to which the Subcontractor is entitled, reflecting percentages actually retained from payments to the Contractor on account of the Subcontractor's portion of the Work. The Contractor shall, by appropriate agreement with each Subcontractor, require each Subcontractor to make payments to Sub-subcontractors in a similar manner.

§ 9.6.3 There shall be retained 5 percent on the estimated amounts of completed work-in-place and on materials stored at the project site and 25 percent retained on the estimated amounts of materials stored off site until final completion and acceptance of all work covered by the Contract. Payment for material stored off site is subject to the conditions of Paragraph 9.3.2. No further or partial payments will be made after the time fixed for final completion of the work, or the time to which final completion may be extended under the terms of the Contract, until full and final completion and

AIA Document A201® – 2017. Copyright © 1911, 1915, 1918, 1925, 1937, 1951, 1958, 1961, 1963, 1966, 1970, 1976, 1987, 1997, 2007 and 2017 by The American Institute of Architects. All rights reserved. The "American Institute of Architects," "AIA," the AIA Logo, "A201," and "AIA Contract Documents" are registered trademarks and may not be used without permission. This document is not an original AIA® Contract Document, but a template produced by AIA® Contract Documents software for producing a customized document.

acceptance of the work. Payments for work under sub-contract of Contractors shall be subject to the above conditions applying to the prime contracts.

§ 9.6.4 The Owner has the right to request written evidence from the Contractor that the Contractor has properly paid Subcontractors and suppliers amounts paid by the Owner to the Contractor for subcontracted Work. If the Contractor fails to furnish such evidence within seven days, the Owner shall have the right to contact Subcontractors and suppliers to ascertain whether they have been properly paid. Neither the Owner nor Architect shall have an obligation to pay, or to see to the payment of money to, a Subcontractor or supplier, except as may otherwise be required by law.

§ 9.6.5 A Certificate for Payment, a progress payment, or partial or entire use or occupancy of the Project by the Owner shall not constitute acceptance of Work not in accordance with the Contract Documents.

§ 9.6.6 Unless the Contractor provides the Owner with a payment bond in the full penal sum of the Contract Sum, payments received by the Contractor for Work properly performed by Subcontractors or provided by suppliers shall be held by the Contractor for those Subcontractors or suppliers who performed Work or furnished materials, or both, under contract with the Contractor for which payment was made by the Owner. Nothing contained herein shall require money to be placed in a separate account and not commingled with money of the Contractor, create any fiduciary liability or tort liability on the part of the Contractor for breach of trust, or entitle any person or entity to an award of punitive damages against the Contractor for breach of the requirements of this provision.

§ 9.6.7 Provided the Owner has fulfilled its payment obligations under the Contract Documents, the Contractor shall defend and indemnify the Owner from all loss, liability, damage or expense, including reasonable attorney's fees and litigation expenses, arising out of any lien claim or other claim for payment by any Subcontractor or supplier of any tier. Upon receipt of notice of a lien claim or other claim for payment, the Owner shall notify the Contractor. If approved by the applicable court, when required, the Contractor may substitute a surety bond for the property against which the lien or other claim for payment has been asserted.

§ 9.7 Failure of Payment

If the Architect does not issue a Certificate for Payment, through no fault of the Contractor, within seven days after receipt of the Contractor's Application for Payment, or if the Owner does not pay the Contractor within seven days after the date established in the Contract Documents, the amount certified by the Architect or awarded by binding dispute resolution, then the Contractor may, upon seven additional days' notice to the Owner and Architect, stop the Work until payment of the amount owing has been received. The Contract Time shall be extended appropriately and the Contract Sum shall be increased by the amount of the Contractor's reasonable costs of shutdown, delay and start-up, plus interest as provided for in the Contract Documents.

§ 9.8 Substantial Completion

§ 9.8.1 Substantial Completion is the stage in the progress of the Work when the Work or designated portion thereof is sufficiently complete in accordance with the Contract Documents so that the Owner can occupy or utilize the Work for its intended use.

§ 9.8.2 When the Contractor considers that the Work, or a portion thereof which the Owner agrees to accept separately, is substantially complete, the Contractor shall prepare and submit to the Architect a comprehensive list of items to be completed or corrected prior to final payment. Failure to include an item on such list does not alter the responsibility of the Contractor to complete all Work in accordance with the Contract Documents.

§ 9.8.3 Upon receipt of the Contractor's list, the Architect will make an inspection to determine whether the Work or designated portion thereof is substantially complete. If the Architect's inspection discloses any item, whether or not included on the Contractor's list, which is not sufficiently complete in accordance with the Contract Documents so that the Owner can occupy or utilize the Work or designated portion thereof for its intended use, the Contractor shall, before issuance of the Certificate of Substantial Completion, complete or correct such item upon notification by the Architect. In such case, the Contractor shall then submit a request for another inspection by the Architect to determine Substantial Completion. Should the Architect, on the basis of this second inspection, determine that the work is not substantially complete, the Contractor shall submit a request for a third inspection. The cost of this and any subsequent inspections, either by the Architect or his Engineers, relative to Substantial Completion shall be back charged to the Contractor.

AIA Document A201® – 2017. Copyright © 1911, 1915, 1918, 1925, 1937, 1951, 1958, 1961, 1963, 1966, 1970, 1976, 1987, 1997, 2007 and 2017 by The American Institute of Architects. All rights reserved. The "American Institute of Architects," "AIA," the AIA Logo, "A201," and "AIA Contract Documents" are registered trademarks and may not be used without permission. This document is not an original AIA® Contract Document, but a template produced by AIA® Contract Documents software for producing a customized document.

§ 9.8.4 When the Work or designated portion thereof is substantially complete, the Architect will prepare a Certificate of Substantial Completion that shall establish the date of Substantial Completion; establish responsibilities of the Owner and Contractor for security, maintenance, heat, utilities, damage to the Work and insurance; and fix the time within which the Contractor shall finish all items on the list accompanying the Certificate. Warranties required by the Contract Documents shall commence on the date of Substantial Completion of the Work or designated portion thereof unless otherwise provided in the Certificate of Substantial Completion.

§ 9.8.5 The Certificate of Substantial Completion shall be submitted to the Owner and Contractor for their written acceptance of responsibilities assigned to them in the Certificate. Upon such acceptance, and consent of surety if any, the Owner shall make payment of retainage applying to the Work or designated portion thereof. Such payment shall be adjusted for Work that is incomplete or not in accordance with the requirements of the Contract Documents.

§ 9.8.6 When the work or major portions thereof are substantially completed the Contractor shall submit to the Owner an application for payment of the remaining amount of the Contract balance. Upon receipt of such application the Owner shall approve and promptly pay the remaining amount of the Contract balance less two times the value of any remaining items to be completed and an amount necessary to satisfy any claims, liens or judgments against the Contractor which have not been suitably discharged. As the remaining items of work are satisfactorily completed or corrected, the Owner shall promptly pay, upon receipt of a requisition, for these items less an amount necessary to satisfy any claims, liens or judgments against the Contractor which have not been suitably discharged. Any claim, liens and adjustments referred to in this section shall pertain to the project and shall be filed in accordance with the terms of the applicable Contract and/or applicable laws.

§ 9.9 Partial Occupancy or Use

§ 9.9.1 The Owner may occupy or use any completed or partially completed portion of the Work at any stage when such portion is designated by separate agreement with the Contractor, provided such occupancy or use is consented to by the insurer and authorized by public authorities having jurisdiction over the Project. Such partial occupancy or use may commence whether or not the portion is substantially complete, provided the Owner and Contractor have accepted in writing the responsibilities assigned to each of them for payments, retainage, if any, security, maintenance, heat, utilities, damage to the Work and insurance, and have agreed in writing concerning the period for correction of the Work and commencement of warranties required by the Contract Documents. When the Contractor considers a portion substantially complete, the Contractor shall prepare and submit a list to the Architect as provided under Section 9.8.2. Consent of the Contractor to partial occupancy or use shall not be unreasonably withheld. The stage of the progress of the Work shall be determined by written agreement between the Owner and Contractor or, if no agreement is reached, by decision of the Architect.

§ 9.9.2 Immediately prior to such partial occupancy or use, the Owner, Contractor, and Architect shall jointly inspect the area to be occupied or portion of the Work to be used in order to determine and record the condition of the Work.

§ 9.9.3 Unless otherwise agreed upon, partial occupancy or use of a portion or portions of the Work shall not constitute acceptance of Work not complying with the requirements of the Contract Documents.

§ 9.10 Final Completion and Final Payment

§ 9.10.1 When contemplating application for final payment, the Contractor shall schedule, one week in advance with the Architect, a joint inspection visit to the Project to determine if the Contract has been fully executed. Upon receipt of the Contractor's notice that the Work is ready for final inspection and acceptance and upon receipt of a final Application for Payment, the Architect will promptly make such inspection. When the Architect finds the Work acceptable under the Contract Documents and the Contract fully performed, the Architect will promptly issue a final Certificate for Payment stating that to the best of the Architect's knowledge, information and belief, and on the basis of the Architect's on-site visits and inspections, the Work has been completed in accordance with the Contract Documents. The Architect's final Certificate for Payment will constitute a further representation that conditions listed in Section 9.10.2 as precedent to the Contractor's being entitled to final payment have been fulfilled.

§ 9.10.1.1 Should the Architect, on the basis of this final inspection, determine that the work is not complete, the Contractor shall complete the work, and issue a request for a second inspection. The cost of this and any subsequent inspections, either by the Architect or his Engineers shall be back charged to the Contractor.

AIA Document A201® – 2017. Copyright © 1911, 1915, 1918, 1925, 1937, 1951, 1958, 1961, 1963, 1966, 1970, 1976, 1987, 1997, 2007 and 2017 by The American Institute of Architects. All rights reserved. The "American Institute of Architects," "AIA," the AIA Logo, "A201," and "AIA Contract Documents" are registered trademarks and may not be used without permission. This document is not an original AIA® Contract Document, but a template produced by AIA® Contract Documents software for producing a customized document.

§ 9.10.2 Neither final payment nor any remaining retained percentage shall become due until the Contractor submits to the Architect (1) an affidavit that payrolls, bills for materials and equipment, and other indebtedness connected with the Work for which the Owner or the Owner's property might be responsible or encumbered (less amounts withheld by Owner) have been paid or otherwise satisfied, (2) a certificate evidencing that insurance required by the Contract Documents to remain in force after final payment is currently in effect, (3) a written statement that the Contractor knows of no reason that the insurance will not be renewable to cover the period required by the Contract Documents, (4) consent of surety, if any, to final payment, (5) documentation of any special warranties, such as manufacturers' warranties or specific Subcontractor warranties, and (6) if required by the Owner, other data establishing payment or satisfaction of obligations, such as receipts and releases and waivers of liens, claims, security interests, or encumbrances arising out of the Contract, to the extent and in such form as may be designated by the Owner. If a Subcontractor refuses to furnish a release or waiver required by the Owner, the Contractor may furnish a bond satisfactory to the Owner to indemnify the Owner against such lien, claim, security interest, or encumbrance. If a lien, claim, security interest, or encumbrance remains unsatisfied after payments are made, the Contractor shall refund to the Owner all money that the Owner may be compelled to pay in discharging the lien, claim, security interest, or encumbrance, including all costs and reasonable attorneys' fees.

§ 9.10.3 If, after Substantial Completion of the Work, final completion thereof is materially delayed through no fault of the Contractor or by issuance of Change Orders affecting final completion, and the Architect so confirms, the Owner shall, upon application by the Contractor and certification by the Architect, and without terminating the Contract, make payment of the balance due for that portion of the Work fully completed, corrected, and accepted. If the remaining balance for Work not fully completed or corrected is less than retainage stipulated in the Contract Documents, and if bonds have been furnished, the written consent of the surety to payment of the balance due for that portion of the Work fully completed and accepted shall be submitted by the Contractor to the Architect prior to certification of such payment. Such payment shall be made under terms and conditions governing final payment, except that it shall not constitute a waiver of Claims.

§ 9.10.4 The making of final payment shall constitute a waiver of Claims by the Owner except those arising from

- **.1** liens, Claims, security interests, or encumbrances arising out of the Contract and unsettled;
- **.2** failure of the Work to comply with the requirements of the Contract Documents;
- **.3** terms of special warranties required by the Contract Documents; or
- **.4** audits performed by the Owner, if permitted by the Contract Documents, after final payment.

§ 9.10.5 Acceptance of final payment by the Contractor, a Subcontractor, or a supplier, shall constitute a waiver of claims by that payee except those previously made in writing and identified by that payee as unsettled at the time of final Application for Payment.

ARTICLE 10 PROTECTION OF PERSONS AND PROPERTY

§ 10.1 Safety Precautions and Programs

The Contractor shall be responsible for initiating, maintaining, and supervising all safety precautions and programs in connection with the performance of the Contract.

§ 10.2 Safety of Persons and Property

§ 10.2.1 The Contractor shall take reasonable precautions for safety of, and shall provide reasonable protection to prevent damage, injury, or loss to

- **.1** employees on the Work and other persons who may be affected thereby;
- **.2** the Work and materials and equipment to be incorporated therein, whether in storage on or off the site, under care, custody, or control of the Contractor, a Subcontractor, or a Sub-subcontractor; and
- **.3** other property at the site or adjacent thereto, such as trees, shrubs, lawns, walks, pavements, roadways, structures, and utilities not designated for removal, relocation, or replacement in the course of construction.

§ 10.2.2 The Contractor shall comply with, and give notices required by applicable laws, statutes, ordinances, codes, rules and regulations, and lawful orders of public authorities, bearing on safety of persons or property or their protection from damage, injury, or loss.

AIA Document A201® – 2017. Copyright © 1911, 1915, 1918, 1925, 1937, 1951, 1958, 1961, 1963, 1966, 1970, 1976, 1987, 1997, 2007 and 2017 by The American Institute of Architects. All rights reserved. The "American Institute of Architects," "AIA," the AIA Logo, "A201," and "AIA Contract Documents" are registered trademarks and may not be used without permission. This document is not an original AIA® Contract Document, but a template produced by AIA® Contract Documents software for producing a customized document.

§ 10.2.3 The Contractor shall implement, erect, and maintain, as required by existing conditions and performance of the Contract, reasonable safeguards for safety and protection, including posting danger signs and other warnings against hazards; promulgating safety regulations; and notifying the owners and users of adjacent sites and utilities of the safeguards.

§ 10.2.4 When use or storage of explosives or other hazardous materials or equipment, or unusual methods are necessary for execution of the Work, the Contractor shall exercise utmost care and carry on such activities under supervision of properly qualified personnel.

§ 10.2.5 The Contractor shall promptly remedy damage and loss (other than damage or loss insured under property insurance required by the Contract Documents) to property referred to in Sections 10.2.1.2 and 10.2.1.3 caused in whole or in part by the Contractor, a Subcontractor, a Sub-subcontractor, or anyone directly or indirectly employed by any of them, or by anyone for whose acts they may be liable and for which the Contractor is responsible under Sections 10.2.1.2 and 10.2.1.3. The Contractor may make a Claim for the cost to remedy the damage or loss to the extent such damage or loss is attributable to acts or omissions of the Owner or Architect or anyone directly or indirectly employed by either of them, or by anyone for whose acts either of them may be liable, and not attributable to the fault or negligence of the Contractor. The foregoing obligations of the Contractor are in addition to the Contractor's obligations under Section 3.18.

§ 10.2.6 The Contractor shall designate a responsible member of the Contractor's organization at the site whose duty shall be the prevention of accidents. This person shall be the Contractor's superintendent unless otherwise designated by the Contractor in writing to the Owner and Architect.

§ 10.2.7 The Contractor shall not permit any part of the construction or site to be loaded so as to cause damage or create an unsafe condition.

§ 10.2.8 Injury or Damage to Person or Property

If either party suffers injury or damage to person or property because of an act or omission of the other party, or of others for whose acts such party is legally responsible, notice of the injury or damage, whether or not insured, shall be given to the other party within a reasonable time not exceeding 21 days after discovery. The notice shall provide sufficient detail to enable the other party to investigate the matter.

§ 10.3 Hazardous Materials and Substances

§ 10.3.1 The Contractor is responsible for compliance with any requirements included in the Contract Documents regarding hazardous materials or substances. If the Contractor encounters a hazardous material or substance not addressed in the Contract Documents and if reasonable precautions will be inadequate to prevent foreseeable bodily injury or death to persons resulting from a material or substance, including but not limited to asbestos or polychlorinated biphenyl (PCB), encountered on the site by the Contractor, the Contractor shall, upon recognizing the condition, immediately stop Work in the affected area and notify the Owner and Architect of the condition.

§ 10.3.2 Upon receipt of the Contractor's notice, the Owner shall obtain the services of a licensed laboratory to verify the presence or absence of the material or substance reported by the Contractor and, in the event such material or substance is found to be present, to cause it to be rendered harmless. Unless otherwise required by the Contract Documents, the Owner shall furnish in writing to the Contractor and Architect the names and qualifications of persons or entities who are to perform tests verifying the presence or absence of the material or substance or who are to perform the task of removal or safe containment of the material or substance. The Contractor and the Architect will promptly reply to the Owner in writing stating whether or not either has reasonable objection to the persons or entities proposed by the Owner. If either the Contractor or Architect has an objection to a person or entity proposed by the Owner, the Owner shall propose another to whom the Contractor and the Architect have no reasonable objection. When the material or substance has been rendered harmless, Work in the affected area shall resume upon written agreement of the Owner and Contractor. By Change Order, the Contract Time shall be extended appropriately and the Contract Sum shall be increased by the amount of the Contractor's reasonable additional costs of shutdown, delay, and start-up.

§ 10.3.3 To the fullest extent permitted by law, the Owner shall indemnify and hold harmless the Contractor, Subcontractors, Architect, Architect's consultants, and agents and employees of any of them from and against claims, damages, losses, and expenses, including but not limited to attorneys' fees, arising out of or resulting from

AIA Document A201® – 2017. Copyright © 1911, 1915, 1918, 1925, 1937, 1951, 1958, 1961, 1963, 1966, 1970, 1976, 1987, 1997, 2007 and 2017 by The American Institute of Architects. All rights reserved. The "American Institute of Architects," "AIA," the AIA Logo, "A201," and "AIA Contract Documents" are registered trademarks and may not be used without permission. This document is not an original AIA® Contract Document, but a template produced by AIA® Contract Documents software for producing a customized document.

performance of the Work in the affected area if in fact the material or substance presents the risk of bodily injury or death as described in Section 10.3.1 and has not been rendered harmless, provided that such claim, damage, loss, or expense is attributable to bodily injury, sickness, disease or death, or to injury to or destruction of tangible property (other than the Work itself), except to the extent that such damage, loss, or expense is due to the fault or negligence of the party seeking indemnity.

§ 10.3.4 The Owner shall not be responsible under this Section 10.3 for hazardous materials or substances the Contractor brings to the site unless such materials or substances are required by the Contract Documents. The Owner shall be responsible for hazardous materials or substances required by the Contract Documents, except to the extent of the Contractor's fault or negligence in the use and handling of such materials or substances.

§ 10.3.5 The Contractor shall reimburse the Owner for the cost and expense the Owner incurs (1) for remediation of hazardous materials or substances the Contractor brings to the site and negligently handles, or (2) where the Contractor fails to perform its obligations under Section 10.3.1, except to the extent that the cost and expense are due to the Owner's fault or negligence.

§ 10.3.6 If, without negligence on the part of the Contractor, the Contractor is held liable by a government agency for the cost of remediation of a hazardous material or substance solely by reason of performing Work as required by the Contract Documents, the Owner shall reimburse the Contractor for all cost and expense thereby incurred.

§ 10.4 Emergencies

In an emergency affecting safety of persons or property, the Contractor shall act, at the Contractor's discretion, to prevent threatened damage, injury, or loss. Additional compensation or extension of time claimed by the Contractor on account of an emergency shall be determined as provided in Article 15 and Article 7.

ARTICLE 11 INSURANCE AND BONDS

§ 11.1 Contractor's Insurance and Bonds

§ 11.1.1 The Contractor shall purchase and maintain insurance of the types and limits of liability, containing the endorsements, and subject to the terms and conditions, as described in the Agreement or elsewhere in the Contract Documents. The Contractor shall purchase and maintain the required insurance from an insurance company or insurance companies lawfully authorized to issue insurance in the jurisdiction where the Project is located. The Owner, Architect, and Architect's consultants shall be named as additional insureds under the Contractor's commercial general liability policy or as otherwise described in the Contract Documents. **§ 11.1.2** The Contractor shall provide surety bonds of the types, for such penal sums, and subject to such terms and conditions as required by the Contract Documents. The Contractor shall purchase and maintain the required bonds from a company or companies lawfully authorized to issue surety bonds in the jurisdiction where the Project is located.

§ 11.1.3 Upon the request of any person or entity appearing to be a potential beneficiary of bonds covering payment of obligations arising under the Contract, the Contractor shall promptly furnish a copy of the bonds or shall authorize a copy to be furnished.

§ 11.1.4 Notice of Cancellation or Expiration of Contractor's Required Insurance. Within three (3) business days of the date the Contractor becomes aware of an impending or actual cancellation or expiration of any insurance required by the Contract Documents, the Contractor shall provide notice to the Owner of such impending or actual cancellation or expiration. Upon receipt of notice from the Contractor, the Owner shall, unless the lapse in coverage arises from an act or omission of the Owner, have the right to stop the Work until the lapse in coverage has been cured by the procurement of replacement coverage by the Contractor. The furnishing of notice by the Contractor shall not relieve the Contractor of any contractual obligation to provide any required coverage.

§ 11.2 Owner's Insurance

§ 11.2.1 The Owner shall purchase and maintain insurance of the types and limits of liability, containing the endorsements, and subject to the terms and conditions, as described in the Agreement or elsewhere in the Contract Documents. The Owner shall purchase and maintain the required insurance from an insurance company or insurance companies lawfully authorized to issue insurance in the jurisdiction where the Project is located.

AIA Document A201® – 2017. Copyright © 1911, 1915, 1918, 1925, 1937, 1951, 1958, 1961, 1963, 1966, 1970, 1976, 1987, 1997, 2007 and 2017 by The American Institute of Architects. All rights reserved. The "American Institute of Architects," "AIA," the AIA Logo, "A201," and "AIA Contract Documents" are registered trademarks and may not be used without permission. This document is not an original AIA® Contract Document, but a template produced by AIA® Contract Documents software for producing a customized document.

§ 11.2.2 Failure to Purchase Required Property Insurance. If the Owner fails to purchase and maintain the required property insurance, with all of the coverages and in the amounts described in the Agreement or elsewhere in the Contract Documents, the Owner shall inform the Contractor in writing prior to commencement of the Work. Upon receipt of notice from the Owner, the Contractor may delay commencement of the Work and may obtain insurance that will protect the interests of the Contractor, Subcontractors, and Sub-Subcontractors in the Work. When the failure to provide coverage has been cured or resolved, the Contract Sum and Contract Time shall be equitably adjusted. In the event the Owner fails to procure coverage, the Owner waives all rights against the Contractor, Subcontractors, and Sub-subcontractors to the extent the loss to the Owner would have been covered by the insurance to have been procured by the Owner. The cost of the insurance shall be charged to the Owner by a Change Order. If the Owner does not provide written notice, and the Contractor is damaged by the failure or neglect of the Owner to purchase or maintain the required insurance, the Owner shall reimburse the Contractor for all reasonable costs and damages attributable thereto.

§ 11.2.3 Notice of Cancellation or Expiration of Owner's Required Property Insurance. Within three (3) business days of the date the Owner becomes aware of an impending or actual cancellation or expiration of any property insurance required by the Contract Documents, the Owner shall provide notice to the Contractor of such impending or actual cancellation or expiration. Unless the lapse in coverage arises from an act or omission of the Contractor: (1) the Contractor, upon receipt of notice from the Owner, shall have the right to stop the Work until the lapse in coverage has been cured by the procurement of replacement coverage by either the Owner or the Contractor; (2) the Contract Time and Contract Sum shall be equitably adjusted; and (3) the Owner waives all rights against the Contractor, Subcontractors, and Sub-subcontractors to the extent any loss to the Owner would have been covered by the insurance had it not expired or been cancelled. If the Contractor purchases replacement coverage, the cost of the insurance shall be charged to the Owner by an appropriate Change Order. The furnishing of notice by the Owner shall not relieve the Owner of any contractual obligation to provide required insurance.

§ 11.3 Waivers of Subrogation

§ 11.3.1 The Owner and Contractor waive all rights against (1) each other and any of their subcontractors, sub-subcontractors, agents, and employees, each of the other; (2) the Architect and Architect's consultants; and (3) Separate Contractors, if any, and any of their subcontractors, sub-subcontractors, agents, and employees, for damages caused by fire, or other causes of loss, to the extent those losses are covered by property insurance required by the Agreement or other property insurance applicable to the Project, except such rights as they have to proceeds of such insurance. The Owner or Contractor, as appropriate, shall require similar written waivers in favor of the individuals and entities identified above from the Architect, Architect's consultants, Separate Contractors, subcontractors, and sub-subcontractors. The policies of insurance purchased and maintained by each person or entity agreeing to waive claims pursuant to this section 11.3.1 shall not prohibit this waiver of subrogation. This waiver of subrogation shall be effective as to a person or entity (1) even though that person or entity would otherwise have a duty of indemnification, contractual or otherwise, (2) even though that person or entity did not pay the insurance premium directly or indirectly, or (3) whether or not the person or entity had an insurable interest in the damaged property.

§ 11.3.2 If during the Project construction period the Owner insures properties, real or personal or both, at or adjacent to the site by property insurance under policies separate from those insuring the Project, or if after final payment property insurance is to be provided on the completed Project through a policy or policies other than those insuring the Project during the construction period, to the extent permissible by such policies, the Owner waives all rights in accordance with the terms of Section 11.3.1 for damages caused by fire or other causes of loss covered by this separate property insurance.

§ 11.4 Loss of Use, Business Interruption, and Delay in Completion Insurance

The Owner, at the Owner's option, may purchase and maintain insurance that will protect the Owner against loss of use of the Owner's property, or the inability to conduct normal operations, due to fire or other causes of loss. The Owner waives all rights of action against the Contractor and Architect for loss of use of the Owner's property, due to fire or other hazards however caused.

§11.5 Adjustment and Settlement of Insured Loss

§ 11.5.1 A loss insured under the property insurance required by the Agreement shall be adjusted by the Owner as fiduciary and made payable to the Owner as fiduciary for the insureds, as their interests may appear, subject to requirements of any applicable mortgagee clause and of Section 11.5.2. The Owner shall pay the Architect and

AIA Document A201® – 2017. Copyright © 1911, 1915, 1918, 1925, 1937, 1951, 1958, 1961, 1963, 1966, 1970, 1976, 1987, 1997, 2007 and 2017 by The American Institute of Architects. All rights reserved. The "American Institute of Architects," "AIA," the AIA Logo, "A201," and "AIA Contract Documents" are registered trademarks and may not be used without permission. This document is not an original AIA® Contract Document, but a template produced by AIA® Contract Documents software for producing a customized document.

Contractor their just shares of insurance proceeds received by the Owner, and by appropriate agreements the Architect and Contractor shall make payments to their consultants and Subcontractors in similar manner.

§ 11.5.2 Prior to settlement of an insured loss, the Owner shall notify the Contractor of the terms of the proposed settlement as well as the proposed allocation of the insurance proceeds. The Contractor shall have 14 days from receipt of notice to object to the proposed settlement or allocation of the proceeds. If the Contractor does not object, the Owner shall settle the loss and the Contractor shall be bound by the settlement and allocation. Upon receipt, the Owner shall deposit the insurance proceeds in a separate account and make the appropriate distributions. Thereafter, if no other agreement is made or the Owner does not terminate the Contract for convenience, the Owner and Contractor shall execute a Change Order for reconstruction of the damaged or destroyed Work in the amount allocated for that purpose. If the Contractor timely objects to either the terms of the proposed settlement or the allocation of the proceeds, the Owner may proceed to settle the insured loss, and any dispute between the Owner and Contractor arising out of the settlement or allocation of the proceeds shall be resolved pursuant to Article 15. Pending resolution of any dispute, the Owner may issue a Construction Change Directive for the reconstruction of the damaged or destroyed Work.

ARTICLE 12 UNCOVERING AND CORRECTION OF WORK

§ 12.1 Uncovering of Work

§ 12.1.1 If a portion of the Work is covered contrary to the Architect's request or to requirements specifically expressed in the Contract Documents, it must, if requested in writing by the Architect, be uncovered for the Architect's examination and be replaced at the Contractor's expense without change in the Contract Time.

§ 12.1.2 If a portion of the Work has been covered that the Architect has not specifically requested to examine prior to its being covered, the Architect may request to see such Work and it shall be uncovered by the Contractor. If such Work is in accordance with the Contract Documents, the Contractor shall be entitled to an equitable adjustment to the Contract Sum and Contract Time as may be appropriate. If such Work is not in accordance with the Contract Documents, the costs of uncovering the Work, and the cost of correction, shall be at the Contractor's expense.

§ 12.2 Correction of Work

§ 12.2.1 Before Substantial Completion

The Contractor shall promptly correct Work rejected by the Architect or failing to conform to the requirements of the Contract Documents, discovered before Substantial Completion and whether or not fabricated, installed or completed. Costs of correcting such rejected Work, including additional testing and inspections, the cost of uncovering and replacement, and compensation for the Architect's services and expenses made necessary thereby, shall be at the Contractor's expense.

§ 12.2.2 After Substantial Completion

§ 12.2.2.1 In addition to the Contractor's obligations under Section 3.5, if, within one year after the date of Substantial Completion of the Work or designated portion thereof or after the date for commencement of warranties established under Section 9.9.1, or by terms of any applicable special warranty required by the Contract Documents, any of the Work is found to be not in accordance with the requirements of the Contract Documents, the Contractor shall correct it promptly after receipt of notice from the Owner to do so, unless the Owner has previously given the Contractor a written acceptance of such condition. The Owner shall give such notice promptly after discovery of the condition. During the one-year period for correction of Work, if the Owner fails to notify the Contractor and give the Contractor an opportunity to make the correction, the Owner waives the rights to require correction by the Contractor and to make a claim for breach of warranty. If the Contractor fails to correct nonconforming Work within a reasonable time during that period after receipt of notice from the Owner or Architect, the Owner may correct it in accordance with Section 2.5.

§ 12.2.2.2 The one-year period for correction of Work shall be extended with respect to portions of Work first performed after Substantial Completion by the period of time between Substantial Completion and the actual completion of that portion of the Work.

§ 12.2.2.3 The one-year period for correction of Work shall not be extended by corrective Work performed by the Contractor pursuant to this Section 12.2.

AIA Document A201® – 2017. Copyright © 1911, 1915, 1918, 1925, 1937, 1951, 1958, 1961, 1963, 1966, 1970, 1976, 1987, 1997, 2007 and 2017 by The American Institute of Architects. All rights reserved. The "American Institute of Architects," "AIA," the AIA Logo, "A201," and "AIA Contract Documents" are registered trademarks and may not be used without permission. This document is not an original AIA® Contract Document, but a template produced by AIA® Contract Documents software for producing a customized document.

§ 12.2.3 The Contractor shall remove from the site portions of the Work that are not in accordance with the requirements of the Contract Documents and are neither corrected by the Contractor nor accepted by the Owner.

§ 12.2.4 The Contractor shall bear the cost of correcting destroyed or damaged construction of the Owner or Separate Contractors, whether completed or partially completed, caused by the Contractor's correction or removal of Work that is not in accordance with the requirements of the Contract Documents.

§ 12.2.5 Nothing contained in this Section 12.2 shall be construed to establish a period of limitation with respect to other obligations the Contractor has under the Contract Documents. Establishment of the one-year period for correction of Work as described in Section 12.2.2 relates only to the specific obligation of the Contractor to correct the Work, and has no relationship to the time within which the obligation to comply with the Contract Documents may be sought to be enforced, nor to the time within which proceedings may be commenced to establish the Contractor's liability with respect to the Contractor's obligations other than specifically to correct the Work.

§ 12.3 Acceptance of Nonconforming Work

If the Owner prefers to accept Work that is not in accordance with the requirements of the Contract Documents, the Owner may do so instead of requiring its removal and correction, in which case the Contract Sum will be reduced as appropriate and equitable. Such adjustment shall be effected whether or not final payment has been made.

ARTICLE 13 MISCELLANEOUS PROVISIONS

.

§ 13.1 Governing Law

The State of _____, County of _____ shall be the respective jurisdiction and venue for any legal action arising out of or in connection with this Contract. The laws of the State of _____ shall apply with regard to construction, interpretation, performance and information pertaining to this Contract.

§ 13.2 Successors and Assigns

§ 13.2.1 The Owner and Contractor respectively bind themselves, their partners, successors, assigns, and legal representatives to covenants, agreements, and obligations contained in the Contract Documents. Except as provided in Section 13.2.2, neither party to the Contract shall assign the Contract as a whole without written consent of the other. If either party attempts to make an assignment without such consent, that party shall nevertheless remain legally responsible for all obligations under the Contract.

§ 13.2.2 The Owner may, without consent of the Contractor, assign the Contract to a lender providing construction financing for the Project, if the lender assumes the Owner's rights and obligations under the Contract Documents. The Contractor shall execute all consents reasonably required to facilitate the assignment.

§ 13.3 Rights and Remedies

§ 13.3.1 Duties and obligations imposed by the Contract Documents and rights and remedies available thereunder shall be in addition to and not a limitation of duties, obligations, rights, and remedies otherwise imposed or available by law.

§ 13.3.2 No action or failure to act by the Owner, Architect, or Contractor shall constitute a waiver of a right or duty afforded them under the Contract, nor shall such action or failure to act constitute approval of or acquiescence in a breach thereunder, except as may be specifically agreed upon in writing.

§ 13.4 Tests and Inspections

§ 13.4.1 Tests, inspections, and approvals of portions of the Work shall be made as required by the Contract Documents and by applicable laws, statutes, ordinances, codes, rules, and regulations or lawful orders of public authorities. Unless otherwise provided, the Contractor shall make arrangements for such tests, inspections, and approvals with an independent testing laboratory or entity acceptable to the Owner, or with the appropriate public authority, and shall bear all related costs of tests, inspections, and approvals. The Contractor shall give the Architect timely notice of when and where tests and inspections are to be made so that the Architect may be present for such

AIA Document A201® – 2017. Copyright © 1911, 1915, 1918, 1925, 1937, 1951, 1958, 1961, 1963, 1966, 1970, 1976, 1987, 1997, 2007 and 2017 by The American Institute of Architects. All rights reserved. The "American Institute of Architects," "AIA," the AIA Logo, "A201," and "AIA Contract Documents" are registered trademarks and may not be used without permission. This document is not an original AIA® Contract Document, but a template produced by AIA® Contract Documents software for producing a customized document.

procedures. The Owner shall bear costs of tests, inspections, or approvals that do not become requirements until after bids are received or negotiations concluded. The Owner shall directly arrange and pay for tests, inspections, or approvals where building codes or applicable laws or regulations so require.

§ 13.4.2 If the Architect, Owner, or public authorities having jurisdiction determine that portions of the Work require additional testing, inspection, or approval not included under Section 13.4.1, the Architect will, upon written authorization from the Owner, instruct the Contractor to make arrangements for such additional testing, inspection, or approval, by an entity acceptable to the Owner, and the Contractor shall give timely notice to the Architect of when and where tests and inspections are to be made so that the Architect may be present for such procedures. Such costs, except as provided in Section 13.4.3, shall be at the Owner's expense.

§ 13.4.3 If procedures for testing, inspection, or approval under Sections 13.4.1 and 13.4.2 reveal failure of the portions of the Work to comply with requirements established by the Contract Documents, all costs made necessary by such failure, including those of repeated procedures and compensation for the Architect's services and expenses, shall be at the Contractor's expense.

§ 13.4.4 Required certificates of testing, inspection, or approval shall, unless otherwise required by the Contract Documents, be secured by the Contractor and promptly delivered to the Architect.

§ 13.4.5 If the Architect is to observe tests, inspections, or approvals required by the Contract Documents, the Architect will do so promptly and, where practicable, at the normal place of testing.

§ 13.4.6 Tests or inspections conducted pursuant to the Contract Documents shall be made promptly to avoid unreasonable delay in the Work.

§ 13.5 Interest

Payments due and unpaid under the Contract Documents shall bear interest from the date payment is due at the rate the parties agree upon in writing or, in the absence thereof, at the legal rate prevailing from time to time at the place where the Project is located.

§ 13.6 Limitation of Liability

The Contractor and his Subcontractors hereby certify that they are skilled and experienced in the use and interpretation of plans and specifications such as those included in the Contract Documents. The Contractor and his Subcontractors shall have carefully reviewed the plans and specifications and have found them free of ambiguities and sufficient for bid purposes. Further, the Contractor and his Subcontractors shall have based their bid solely on those documents, not relying in any way on any explanation or interpretation, oral or written, from any other source. Assured of the adequacy of the documents and the accuracy of his bid, the Contractor agrees and shall require his Subcontractors to agree to limit the liability of the Design Professional and the Owner for professional negligence, errors or omissions of the Design Professional to a total aggregate sum of $50,000 or the Design Professional's total fee for services rendered on this Project, whichever is greater. The Contractor and his Subcontractors do not assume any liability for damages to others caused by the professional negligence, errors or omissions of the Design Professional.

ARTICLE 14 TERMINATION OR SUSPENSION OF THE CONTRACT

§ 14.1 Termination by the Contractor

§ 14.1.1 The Contractor may terminate the Contract if the Work is stopped for a period of 30 consecutive days through no act or fault of the Contractor, a Subcontractor, a Sub-subcontractor, their agents or employees, or any other persons or entities performing portions of the Work, for any of the following reasons:

.1 Issuance of an order of a court or other public authority having jurisdiction that requires all Work to be stopped;

.2 An act of government, such as a declaration of national emergency, that requires all Work to be stopped;

.3 Because the Architect has not issued a Certificate for Payment and has not notified the Contractor of the reason for withholding certification as provided in Section 9.4.1, or because the Owner has not made payment on a Certificate for Payment within the time stated in the Contract Documents; or

.4 The Owner has failed to furnish to the Contractor reasonable evidence as required by Section 2.2.

AIA Document A201® – 2017. Copyright © 1911, 1915, 1918, 1925, 1937, 1951, 1958, 1961, 1963, 1966, 1970, 1976, 1987, 1997, 2007 and 2017 by The American Institute of Architects. All rights reserved. The "American Institute of Architects," "AIA," the AIA Logo, "A201," and "AIA Contract Documents" are registered trademarks and may not be used without permission. This document is not an original AIA® Contract Document, but a template produced by AIA® Contract Documents software for producing a customized document.

§ 14.1.2 The Contractor may terminate the Contract if, through no act or fault of the Contractor, a Subcontractor, a Sub-subcontractor, their agents or employees, or any other persons or entities performing portions of the Work, repeated suspensions, delays, or interruptions of the entire Work by the Owner as described in Section 14.3, constitute in the aggregate more than 100 percent of the total number of days scheduled for completion, or 120 days in any 365-day period, whichever is less.

§ 14.1.3 If one of the reasons described in Section 14.1.1 or 14.1.2 exists, the Contractor may, upon seven days' notice to the Owner and Architect, terminate the Contract and recover from the Owner payment for Work executed, as well as reasonable overhead and profit, and costs incurred by reason of such termination.

§ 14.1.4 If the Work is stopped for a period of 60 consecutive days through no act or fault of the Contractor, a Subcontractor, a Sub-subcontractor, or their agents or employees or any other persons or entities performing portions of the Work because the Owner has repeatedly failed to fulfill the Owner's obligations under the Contract Documents with respect to matters important to the progress of the Work, the Contractor may, upon seven additional days' notice to the Owner and the Architect, terminate the Contract and recover from the Owner as provided in Section 14.1.3.

§ 14.2 Termination by the Owner for Cause

§ 14.2.1 The Owner may terminate the Contract if the Contractor

- **.1** repeatedly refuses or fails to supply enough properly skilled workers or proper materials;
- **.2** fails to make payment to Subcontractors or suppliers in accordance with the respective agreements between the Contractor and the Subcontractors or suppliers;
- **.3** repeatedly disregards applicable laws, statutes, ordinances, codes, rules and regulations, or lawful orders of a public authority; or
- **.4** otherwise is guilty of substantial breach of a provision of the Contract Documents.

§ 14.2.2 When any of the reasons described in Section 14.2.1 exist, and upon certification by the Architect that sufficient cause exists to justify such action, the Owner may, without prejudice to any other rights or remedies of the Owner and after giving the Contractor and the Contractor's surety, if any, seven days' notice, terminate employment of the Contractor and may, subject to any prior rights of the surety:

- **.1** Exclude the Contractor from the site and take possession of all materials, equipment, tools, and construction equipment and machinery thereon owned by the Contractor;
- **.2** Accept assignment of subcontracts pursuant to Section 5.4; and
- **.3** Finish the Work by whatever reasonable method the Owner may deem expedient. Upon written request of the Contractor, the Owner shall furnish to the Contractor a detailed accounting of the costs incurred by the Owner in finishing the Work.

§ 14.2.3 When the Owner terminates the Contract for one of the reasons stated in Section 14.2.1, the Contractor shall not be entitled to receive further payment until the Work is finished.

§ 14.2.4 If the unpaid balance of the Contract Sum exceeds costs of finishing the Work, including compensation for the Architect's services and expenses made necessary thereby, and other damages incurred by the Owner and not expressly waived, such excess shall be paid to the Contractor. If such costs and damages exceed the unpaid balance, the Contractor shall pay the difference to the Owner. The amount to be paid to the Contractor or Owner, as the case may be, shall be certified by the Initial Decision Maker, upon application, and this obligation for payment shall survive termination of the Contract.

§ 14.3 Suspension by the Owner for Convenience

§ 14.3.1 The Owner may, without cause, order the Contractor in writing to suspend, delay or interrupt the Work, in whole or in part for such period of time as the Owner may determine.

§ 14.3.2 The Contract Sum and Contract Time shall be adjusted for increases in the cost and time caused by suspension, delay, or interruption under Section 14.3.1. Adjustment of the Contract Sum shall include profit. No adjustment shall be made to the extent

- **.1** that performance is, was, or would have been, so suspended, delayed, or interrupted, by another cause for which the Contractor is responsible; or

AIA Document A201® – 2017. Copyright © 1911, 1915, 1918, 1925, 1937, 1951, 1958, 1961, 1963, 1966, 1970, 1976, 1987, 1997, 2007 and 2017 by The American Institute of Architects. All rights reserved. The "American Institute of Architects," "AIA," the AIA Logo, "A201," and "AIA Contract Documents" are registered trademarks and may not be used without permission. This document is not an original AIA® Contract Document, but a template produced by AIA® Contract Documents software for producing a customized document.

.2 that an equitable adjustment is made or denied under another provision of the Contract.

§ 14.4 Termination by the Owner for Convenience

§ 14.4.1 The Owner may, at any time, terminate the Contract for the Owner's convenience and without cause.

§ 14.4.2 Upon receipt of notice from the Owner of such termination for the Owner's convenience, the Contractor shall

.1 cease operations as directed by the Owner in the notice;

.2 take actions necessary, or that the Owner may direct, for the protection and preservation of the Work; and

.3 except for Work directed to be performed prior to the effective date of termination stated in the notice, terminate all existing subcontracts and purchase orders and enter into no further subcontracts and purchase orders.

§ 14.4.3 In case of such termination for the Owner's convenience, the Owner shall pay the Contractor for Work properly executed; costs incurred by reason of the termination, including costs attributable to termination of Subcontracts.

ARTICLE 15 CLAIMS AND DISPUTES

§ 15.1 Claims

§ 15.1.1 Definition

A Claim is a demand or assertion by one of the parties seeking, as a matter of right, payment of money, a change in the Contract Time, or other relief with respect to the terms of the Contract. The term "Claim" also includes other disputes and matters in question between the Owner and Contractor arising out of or relating to the Contract. The responsibility to substantiate Claims shall rest with the party making the Claim. This Section 15.1.1 does not require the Owner to file a Claim in order to impose liquidated damages in accordance with the Contract Documents.

§ 15.1.2 Time Limits on Claims

The Owner and Contractor shall commence all Claims and causes of action against the other and arising out of or related to the Contract, whether in contract, tort, breach of warranty or otherwise, in accordance with the requirements of the binding dispute resolution method selected in the Agreement and within the period specified by applicable law.

§ 15.1.3 Notice of Claims

§ 15.1.3.1 Claims by either the Owner or Contractor, where the condition giving rise to the Claim is first discovered prior to expiration of the period for correction of the Work set forth in Section 12.2.2, shall be initiated by notice to the other party and to the Initial Decision Maker with a copy sent to the Architect, if the Architect is not serving as the Initial Decision Maker. Claims by either party under this Section 15.1.3.1 shall be initiated within 21 days after occurrence of the event giving rise to such Claim or within 21 days after the claimant first recognizes the condition giving rise to the Claim, whichever is later.

§ 15.1.3.2 Claims by either the Owner or Contractor, where the condition giving rise to the Claim is first discovered after expiration of the period for correction of the Work set forth in Section 12.2.2, shall be initiated by notice to the other party. In such event, no decision by the Initial Decision Maker is required.

§ 15.1.4 Continuing Contract Performance

§ 15.1.4.1 Pending final resolution of a Claim, except as otherwise agreed in writing or as provided in Section 9.7 and Article 14, the Contractor shall proceed diligently with performance of the Contract and the Owner shall continue to make payments in accordance with the Contract Documents.

§ 15.1.4.2 The Contract Sum and Contract Time shall be adjusted in accordance with the Initial Decision Maker's decision, subject to the right of either party to proceed in accordance with this Article 15. The Architect will issue Certificates for Payment in accordance with the decision of the Initial Decision Maker.

AIA Document A201® – 2017. Copyright © 1911, 1915, 1918, 1925, 1937, 1951, 1958, 1961, 1963, 1966, 1970, 1976, 1987, 1997, 2007 and 2017 by The American Institute of Architects. All rights reserved. The "American Institute of Architects," "AIA," the AIA Logo, "A201," and "AIA Contract Documents" are registered trademarks and may not be used without permission. This document is not an original AIA® Contract Document, but a template produced by AIA® Contract Documents software for producing a customized document.

§ 15.1.5 Claims for Additional Cost

If the Contractor wishes to make a Claim for an increase in the Contract Sum, notice as provided in Section 15.1.3 shall be given before proceeding to execute the portion of the Work that is the subject of the Claim. Prior notice is not required for Claims relating to an emergency endangering life or property arising under Section 10.4.

§ 15.1.6 Claims for Additional Time

§ 15.1.6.1 If the Contractor wishes to make a Claim for an increase in the Contract Time, notice as provided in Section 15.1.3 shall be given and a statement of why additional time is necessary. The Contractor's Claim shall include an estimate of cost and of probable effect of delay on progress of the Work. In the case of a continuing delay, only one Claim is necessary.

§ 15.1.6.2 If adverse weather conditions are the basis for a Claim for additional time, such Claim shall be documented by data substantiating that weather conditions were abnormal for the period of time, could not have been reasonably anticipated, and had an adverse effect on the scheduled construction.

§ 15.1.7 Waiver of Claims for Consequential Damages

The Contractor and Owner waive Claims against each other for consequential damages arising out of or relating to this Contract. This mutual waiver includes

- **.1** damages incurred by the Owner for rental expenses, for losses of use, income, profit, financing, business and reputation, and for loss of management or employee productivity or of the services of such persons; and
- **.2** damages incurred by the Contractor for principal office expenses including the compensation of personnel stationed there, for losses of financing, business and reputation, and for loss of profit, except anticipated profit arising directly from the Work.

This mutual waiver is applicable, without limitation, to all consequential damages due to either party's termination in accordance with Article 14. Nothing contained in this Section 15.1.7 shall be deemed to preclude assessment of liquidated damages, when applicable, in accordance with the requirements of the Contract Documents.

§ 15.2 Initial Decision

§ 15.2.1 Claims, excluding those where the condition giving rise to the Claim is first discovered after expiration of the period for correction of the Work set forth in Section 12.2.2 or arising under Sections 10.3, 10.4, and 11.5, shall be referred to the Initial Decision Maker for initial decision. The Architect will serve as the Initial Decision Maker, unless otherwise indicated in the Agreement. Except for those Claims excluded by this Section 15.2.1, an initial decision shall be required as a condition precedent to mediation of any Claim. If an initial decision has not been rendered within 30 days after the Claim has been referred to the Initial Decision Maker, the party asserting the Claim may demand mediation and/orbinding dispute resolution without a decision having been rendered. Unless the Initial Decision Maker and all affected parties agree, the Initial Decision Maker will not decide disputes between the Contractor and persons or entities other than the Owner.

§ 15.2.2 The Initial Decision Maker will review Claims and within ten days of the receipt of a Claim take one or more of the following actions: (1) request additional supporting data from the claimant or a response with supporting data from the other party, (2) reject the Claim in whole or in part, (3) approve the Claim, (4) suggest a compromise, or (5) advise the parties that the Initial Decision Maker is unable to resolve the Claim if the Initial Decision Maker lacks sufficient information to evaluate the merits of the Claim or if the Initial Decision Maker concludes that, in the Initial Decision Maker's sole discretion, it would be inappropriate for the Initial Decision Maker to resolve the Claim.

§ 15.2.3 In evaluating Claims, the Initial Decision Maker may, but shall not be obligated to, consult with or seek information from either party or from persons with special knowledge or expertise who may assist the Initial Decision Maker in rendering a decision. The Initial Decision Maker may request the Owner to authorize retention of such persons at the Owner's expense.

§ 15.2.4 If the Initial Decision Maker requests a party to provide a response to a Claim or to furnish additional supporting data, such party shall respond, within ten days after receipt of the request, and shall either (1) provide a response on the requested supporting data, (2) advise the Initial Decision Maker when the response or supporting data will be furnished, or (3) advise the Initial Decision Maker that no supporting data will be furnished. Upon

AIA Document A201® – 2017. Copyright © 1911, 1915, 1918, 1925, 1937, 1951, 1958, 1961, 1963, 1966, 1970, 1976, 1987, 1997, 2007 and 2017 by The American Institute of Architects. All rights reserved. The "American Institute of Architects," "AIA," the AIA Logo, "A201," and "AIA Contract Documents" are registered trademarks and may not be used without permission. This document is not an original AIA® Contract Document, but a template produced by AIA® Contract Documents software for producing a customized document.

receipt of the response or supporting data, if any, the Initial Decision Maker will either reject or approve the Claim in whole or in part.

§ 15.2.5 The Initial Decision Maker will render an initial decision approving or rejecting the Claim, or indicating that the Initial Decision Maker is unable to resolve the Claim. This initial decision shall (1) be in writing; (2) state the reasons therefor; and (3) notify the parties and the Architect, if the Architect is not serving as the Initial Decision Maker, of any change in the Contract Sum or Contract Time or both. The initial decision shall be final and binding on the parties but subject to mediation and, if the parties fail to resolve their dispute through mediation, to binding dispute resolution in a court of law.

§ 15.2.6 Either party may file for mediation of an initial decision at any time, subject to the terms of Section 15.2.6.1.

§ 15.2.6.1 Either party may, within 30 days from the date of receipt of an initial decision, demand in writing that the other party file for mediation. If such a demand is made and the party receiving the demand fails to file for mediation within 30 days after receipt thereof, then both parties waive their rights to mediate or pursue binding dispute resolution proceedings with respect to the initial decision.

§ 15.2.7 In the event of a Claim against the Contractor, the Owner may, but is not obligated to, notify the surety, if any, of the nature and amount of the Claim. If the Claim relates to a possibility of a Contractor's default, the Owner may, but is not obligated to, notify the surety and request the surety's assistance in resolving the controversy.

§ 15.2.8 If a Claim relates to or is the subject of a mechanic's lien, the party asserting such Claim may proceed in accordance with applicable law to comply with the lien notice or filing deadlines.

§ 15.3 Mediation

§ 15.3.1 Claims, disputes, or other matters in controversy arising out of or related to the Contract, except those waived as provided for in Sections 9.10.4, 9.10.5, and 15.1.7, shall be subject to mediation as a condition precedent to binding dispute resolutionin a court of law.

§ 15.3.2 The parties shall endeavor to resolve their Claims by mediation which, unless the parties mutually agree otherwise, shall be administered by the American Arbitration Association in accordance with its Construction Industry Mediation Procedures in effect on the date of the Agreement. A request for mediation shall be made in writing, delivered to the other party to the Contract, and filed with the person or entity administering the mediation. The request may be made concurrently with the filing of binding dispute resolution proceedings but, in such event, mediation shall proceed in advance of binding dispute resolution proceedings, which shall be stayed pending mediation for a period of 60 days from the date of filing, unless stayed for a longer period by agreement of the parties or court order.

§ 15.3.3 Either party may, within 30 days from the date that mediation has been concluded without resolution of the dispute or 60 days after mediation has been demanded without resolution of the dispute, demand in writing that the other party file for binding dispute resolution. If such a demand is made and the party receiving the demand fails to file for binding dispute resolution within 60 days after receipt thereof, then both parties waive their rights to binding dispute resolution proceedings with respect to the initial decision.

§ 15.3.4 The parties shall share the mediator's fee and any filing fees equally. The mediation shall be held in the place where the Project is located, unless another location is mutually agreed upon. Agreements reached in mediation shall be enforceable as settlement agreements in any court having jurisdiction thereof.

AIA Document A201® – 2017. Copyright © 1911, 1915, 1918, 1925, 1937, 1951, 1958, 1961, 1963, 1966, 1970, 1976, 1987, 1997, 2007 and 2017 by The American Institute of Architects. All rights reserved. The "American Institute of Architects," "AIA," the AIA Logo, "A201," and "AIA Contract Documents" are registered trademarks and may not be used without permission. This document is not an original AIA® Contract Document, but a template produced by AIA® Contract Documents software for producing a customized document.

DOCUMENT 007100 - SUPPLEMENTARY CONDITIONS

The following Supplements modify, change, delete from or add to the "General Conditions of the Contract for Construction," AIA Document A201, 2017 Edition. Where any Article of the General Conditions is modified or any paragraph, subparagraph or clause thereof is modified or deleted by these Supplementary Conditions, the unaltered provisions of that Article, paragraph, subparagraph or clause shall remain in effect.

ARTICLE 1 GENERAL PROVISIONS

PARAGRAPH 1.1 BASIC DEFINITIONS

A. Sub-paragraph 1.1.1: Line 2, before "Agreement," insert "the Bidding Requirements (Advertisement or Invitation to Bid, Instructions to Bidders, Supplementary Instructions to Bidders, Completed Bid Form, Bid Bond, completed Contractor's Qualification Statement, and other sample forms). Delete the last sentence in its entirety.

B. Sub-paragraph 1.1.8: Delete "Claims" and insert "claims". Delete "and certify termination of the Agreement under Section 14.2.2.".

PARAGRAPH 1.2

A. Sub-paragraph 1.2.1: Add to the end of the sub-section:

All Work mentioned or indicated in the Contract Documents shall be performed by the Contractor as part of this Contract unless it is specifically indicated in the Contract Documents that such Work is to be done by others. Should the Drawings or the Specifications disagree in themselves or with each other, the Contractor shall provide the better quality or greater quantity of Work unless otherwise directed by written addendum to the Contract.

B. Sub-paragraph 1.2.2: Add to the end of the sentence:

, except that the performance of filed sub-trade work shall comply with the provisions of chapter 149 of the General Laws of the Commonwealth of Massachusetts. The Contractor and all Subcontractors shall refer to all of the Drawings, including those showing primarily the Work of the mechanical, electrical and other specialized trades, and to all of the Sections of the Specifications, and shall perform all Work reasonably inferable therefrom as being necessary to produce the indicated results.

C. Sub-paragraphs 1.2.4-1.2.11: Add the following new sub-sections 1.2.4 to 1.2.11 as follows: -1.2.11

§ 1.2.4 All indications or notations which apply to one of a number of similar situations, materials or processes shall be deemed to apply to all such situations, materials or processes wherever they appear in the Work, except where a contrary result is clearly indicated by the Contract Documents.

§ 1.2.5 Where codes, standards, requirements and publications of public and private bodies are referred to in the Specifications, references shall be understood to be to the latest revision prior to the date of receiving bids, except where otherwise indicated.

§ 1.2.6 Where no explicit quality or standards for materials or workmanship are established for Work, such Work is to be of good quality for the intended use and consistent with the quality of the surrounding Work and of the construction of the Project generally.

§ 1.2.7 All manufactured articles, materials, and equipment shall be applied, installed, connected, erected, used, cleaned, and conditioned in accordance with the manufacturer's written or printed directions and instructions unless otherwise indicated in the Contract Documents.

§ 1.2.8 The Mechanical, Electrical and Fire Protection Drawings are diagrammatic only, and are not intended to show the alignment, physical locations or configurations of such Work. Such Work shall be installed without additional cost to the Owner to clear all obstructions, permit proper clearances for the Work of other trades, and present an orderly appearance where exposed. Prior to beginning such Work, the Contractor shall prepare coordination drawings showing the exact alignment, physical location and configuration of the Mechanical, Electrical and Fire Protection installations and demonstrating to the Contractor's satisfaction that the installations will comply with the preceding sentence. A copy of the drawings shall be submitted to the Architect, and the Contractor shall revise and resubmit the drawings if so directed by the Architect.

§ 1.2.9 Exact locations of fixtures and outlets shall be obtained from the Architect as provided in subparagraph 3.2.5 before the Work is roughed in; Work installed without such information from the Architect shall be relocated at the Contractor's expense.

§ 1.2.10 Test boring or soil test information included with the Contract Documents or otherwise made available to the Contractor was obtained by the Owner for use by the Architects in the design of the Project or Work. The Owner does not hold out such information to the Contractor as a completely accurate indication of subsurface conditions, and no claim for extra cost or extension of time resulting from a reliance by the Contractor on such information shall be allowed except as provided in subparagraph 3.7.4.

§ 1.2.11 Where the Work is to fit with existing conditions or work to be performed by others, the Contractor shall fully and completely join the Work with such conditions or work, unless otherwise specified. Owner provided drawings showing existing conditions or construction are based on available documents and are not guaranteed to show actual existing conditions.

PARAGRAPH 1.5

A. Sub-paragraph 1.5.1: Delete 1.5.1 and replace as follows:

§ 1.5.1 All Drawings, Specifications and copies thereof furnished by the Owner are and shall remain the Owner's property. They are to be used only with respect to this Project and are not to be used on any other project without the prior written consent of the Owner. With the exception of one contract set for each party to the Contract, such documents are to be returned or suitably accounted for to the Owner at the completion of the Work. Submission or distribution to meet official regulatory requirements or for other purposes in connection with the Project is not to be construed as publication in derogation of any reserved rights.

ARTICLE 2 OWNER

PARAGRAPH 2.1

A. Delete Sub-Paragraph 2.1.2

PARAGRAPH 2.2 INFORMATION AND SERVICES REQUIRED OF THE OWNER

A. Sub-Paragraph 2.2.1: Delete the last three sentences.

B. Sub-Paragraph 2.2.2: Add the following to the beginning of the paragraph:

"If required by the nature of the Work,"

C. Sub-Paragraph 2.2.3: In the first sentence insert "available" after "shall furnish". Delete the last sentence and replace as follows:

The Owner makes no warranty as to the accuracy or completeness of such information, and the Contractor shall exercise proper precautions relating to the safe performance of the Work.

D. Sub-Paragraph 2.2.4: Delete the last sentence.

E. Sub-Paragraph 2.2.5: Add to the end of the sub-section as follows:

All additional copies will be furnished upon request at the cost of reproduction.

PARAGRPAH 2.3

a. Sub-Paragraph 2.3 Delete from the last sentence ", except to the extent required by Section 6.1.3" and add as follows:

The Contractor shall resume the Work after such stoppage promptly upon written notice to do so from the Owner. The Contractor shall remain responsible for maintaining the progress of the Work and shall not be entitled to any increase in the Contract Sum or Contract Time. The Contractor shall be responsible for all costs incurred by the Owner attributable to such an order to stop the Work.

ARTICLE 3 CONTRACTOR

PARAGRAPH 3.2 REVIEW OF CONTRACT DOCUMENTS AND FIELD CONDITIONS BY CONTRACTOR

A. Subparagraph 3.2.1: Delete "generally" after "the site, become". Add to the end of the sub-section as follows:

The Contractor shall not be entitled to any change in the Contract Time or Contract Sum on account of its failure, or that of any Subcontractor, to comply with the foregoing requirements.

B. Subparagraph 3.2.2: Delete the beginning of the second sentence through the words "in the Contract documents; however". Add the following at the end of the subparagraph:

"If the Contractor fails to make such report, no excuse will thereafter be entertained by Owner or Architect for failure to carry out the work in satisfactory manner. Should conflict occur within or between Contract Documents, the Contractor is deemed to have estimated on more expensive way of doing work, unless the Contractor asked for and obtained written decision before submission of proposal as to which method or materials will be required. Delete the last sentence and replace as follows:

> If the Contractor performs any construction activity that it knows or should know involves a recognized error, inconsistency or omission in the Contract Documents without such notice to the Architect, the Contractor shall assume appropriate responsibility for such performance and shall bear responsibility for the costs of any required correction.

C. Subparagraph 3.2.3: Delete "not" after "Contractor is". Delete ", but" after "public authorities" and create new sentence beginning with "The Contractor shall promptly".

D. Subparagraph 3.2.4: Delete "claims" after "the Contractor shall make" and insert "a claim". Delete the last sentence.

E. Subparagraph 3.2.5: Add new sub-section 3.2.5 as follows:

§ 3.2.5 Any claim by the Contractor or Subcontractors that, in submitting their respective bids, they did not include all items as shown in the Contract Documents will be given no consideration for an adjustment of any kind. If any item is specified in a Section which would not normally furnish this item it shall be the responsibility of the Contractor to coordinate the situation with the Subcontractor, and if the item under consideration is not to be provided by the Subcontractor it shall be the responsibility of the Contractor to provide the work in question, without any additional cost to the Owner.__

PARAGRAPH 3.3 SUPERVISION AND CONSTRUCTION PROCEDURES

A. Subparagraph 3.3.1: Add to the end of the first sentence as follows:

> which shall not be less than such state of skill and attention generally rendered by the contracting profession for projects similar to the Project in scope, difficulty and location. The Contractor shall adequately staff the Project to properly and thoroughly manage, schedule and supervise all construction activities.
>
> Delete the last sentence.

B. Subparagraph 3.3.2: After "performing" insert "any." Add the last sentence as follows:

> This obligation shall also extend to the presence on the Site of suppliers of materials or equipment, their employees, contractors, and agents engaged in the Work.

PARAGRAPH 3.4 LABOR AND MATERIALS

A. Subparagraph 3.4.2: Delete in its entirety and substitute the following:

"3.4.2 The Contractor may propose substitutions in accordance with the requirements for substitutions in Division 1 Specifications."

B. Subparagraph 3.4.3: Add to the end of the second sentence as follows:

, and the Contractor shall ensure that all workers to be employed on the Project have successfully completed a course in construction safety and health approved by the United States Occupational Safety and Health Administration (OSHA) of at least 10 hours. The Contractor shall be responsible for maintaining all safety precautions at and around the Project site. On the Owner's request, the Contractor shall permanently remove from the Project site any employee of the Contractor or any Subcontractor who fails to comply with the requirements of the Contract Documents or whose presence or behavior is deemed by the Owner to be adverse to the success of the Project or the Owner's interests.

PARAGRPAH 3.5

A. Add to the end of the first sentence as follows:

and, promptly after written notification of non-conformance, shall be repaired or replaced by the Contractor with Work conforming to such requirements.

Delete the second to last sentence.

B. Add new subparagraphs 3.5.2 to 3.5.8 as follows:

§ 3.5.2 The Contractor shall be responsible for determining that all materials furnished for the Work meet all requirements of the Contract Documents. The Architect may require the Contractor to produce reasonable evidence that a material meets such requirements, such as certified reports of past tests by qualified testing laboratories, reports of studies by qualified experts, or other evidence which, in the opinion of the Architect, would lead to a reasonable certainty that any material used, or proposed to be used, in the Work meets the requirements of the Contract Documents. All such data shall be furnished at the Contractor's expense. This provision shall not require the Contractor to pay for periodic testing of different batches of the same material, unless such testing is specifically required by the Contract Documents to be performed at the Contractor's expense.

§ 3.5.3 If the Contractor proposes to use a material which, while suitable for the intended use, deviates in any way from the detailed requirements of the Contract Documents, the Contractor shall inform the Architect in writing of the nature of such deviations at the time the material is submitted for approval and request approval of the deviation. The Architect shall judge the design and appearance of proposed substitutes, and may refuse to approve any substitute which, in the Architect's opinion, would be out of character or otherwise inconsistent with the character or quality of design of the Project.

§ 3.5.4 In informing the Architect of deviations or substitutions, the Contractor shall provide, upon request, evidence leading to a reasonable certainty that the proposed substitution or deviation will provide a quality of result at least equal to that otherwise attainable in accordance with the Contract Documents. If, in the opinion of the Architect, the evidence presented by the Contractor does not provide a sufficient basis for such reasonable certainty, the Architect may reject such substitution or deviation without further investigation.

§ 3.5.5 Any additional cost, or any loss or damage arising from the substitution of any material or any method for those originally specified shall be borne by the Contractor, notwithstanding approval or acceptance of such substitution by the Owner or the Architect, unless such substitution was made at the written request or direction of the Owner or the Architect.

§ 3.5.6 The warranty provided in this paragraph 3.5 shall be in addition to and not in limitation of any other warranty required by the Contract Documents or otherwise prescribed by law.

§ 3.5.7 The Contractor shall procure and deliver to the Architect, no later than the date claimed by the Contractor as the date of Substantial Completion, all special warranties required by the Contract Documents. Delivery by the Contractor shall constitute the Contractor's guarantee to the Owner that the warranty will be performed in accordance with its terms and conditions.

§3.5.8 The Contractor shall guarantee all Work for a period of one year after Date of Substantial Completion, or by the terms of any special guarantee required by the Contract Documents. The Contractor shall, upon written notice from the Owner, promptly correct defective Work or Work not in accordance with the Contract Documents. __

PARAGRAPH 3.6 TAXES

A. Delete in its entirety and substitute the following:

"3.6.1.1 The project is exempt from the Massachusetts Sales Tax to the extent permitted by G.L. c.64H, §6(f). The exemption number will be provided by the Awarding Authority to the Contractor.__ These taxes are not to be included in the Contract Sum.

3.6.1 Exception: Plumbing and Drainage Contractor/Subcontractor to obtain and pay for all necessary connection taxes and other service charges required by local sewer or water authorities to complete plumbing systems."

PARAGRAPH 3.7 PERMITS, FEES AND NOTICES

A. Subparagraph 3.7.2: Add to the end of the sub-section as follows:

If any of the Work is required to be inspected or approved by any public authority, the Contractor shall cause such inspection or approval to be performed and shall comply with any instructions or corrections ordered by the public authority.

B. Subparagraph 3.7.3: Delete "knowing it" after "performs Work" and replace with "it knows or should know".

C. Delete sub-section 3.7.4 and replace as follows:

§ 3.7.4 Concealed or Unknown Conditions. Claims for concealed or unknown conditions shall be governed by Chapter 30, Section 39N of the General Laws of the Commonwealth of Massachusetts, as amended.

D. Subparagraph 3.7.5: Delete second and last sentences.__

PARAGRAPH 3.8

A. Delete this Paragraph in its entirety.

PARAGRAPH 3.9 SUPERINTENDENT

A. Subparagraph 3.9.1: In the first sentence: Insert ", in accordance with the Contract Documents," after "shall employ" and insert "at all times" after "the Project site".

B. Subparagraph 3.9.3: Add the following at the end: "Proposed changes of Superintendents shall follow the same review procedures as in 3.9.2".

C. Add new subparagraphs 3.9.4 and 3.9.5 as follows:

§ 3.9.4 The Contractor shall coordinate and supervise the Work performed by Subcontractors to the end that the Work is carried out without conflict between trades and so that no trade, at any time, causes delay to the general progress of the Work. The Contractor and all Subcontractors shall at all times afford each trade, any separate contractor, or the Owner, every reasonable opportunity for the installation of Work and the storage of materials.

§ 3.9.5 The Contractor shall arrange for and attend job meetings with the Architect and such other persons as the Architect may from time to time wish to have present. The Contractor shall be represented by a principal, project manager, general superintendent or other authorized main office representative, as well as by the Contractor's own superintendent. An authorized representative of any Subcontractor or Sub-subcontractor shall attend such meetings if the representative's presence is requested by the Architect. Such representatives shall be empowered to make binding commitments on all matters to be discussed at such meetings, including costs, payments, change orders, time schedules and manpower. Any notices required under the Contract may be served on such representatives.__

PARAGRAPH 3.10 CONTRACTOR'S CONSTRUCTION SCHEDULES

A. This paragraph is supplemented by Division 1 Specifications.

PARAGRAPH 3.12 SHOP DRAWINGS, PRODUCT DATA AND SAMPLES

A. This paragraph is supplemented by Division 1 Specifications.

PARAGRAPH 3.13

A. Add to the end of the Subparagraph as follows:

The right of possession of the premises and the improvements made thereon by the Contractor shall remain at all times with the Owner. The Contractor's right to entry and use thereof arises solely from the permission granted by the Owner under the Contract Documents. The Owner shall not be liable to the Contractor, the Subcontractors, their employees, or anyone else with respect to the conditions of the premises, except only for a condition caused directly and solely by the negligence of the Owner.

PARAGRAPH 3.15 CLEANING UP

A. This paragraph is supplemented by Division 1 Specifications.

PARAGRAPH 3.16

A. Insert ", Owner's representatives" after "provide the Owner".

PARAGRAPH 3.18 INDEMNIFICATION

A. Delete subparagraph 3.18.1 and replace with the following:

"3.18.1 To the fullest extent provided by law, and notwithstanding the limits of any insurance provided or maintained by the Contractor, the Contractor shall defend (for third party claims, at the election of the indemnitee), indemnify, and hold harmless the Owner, Architect, Architect's Consultants and officers, employees, members and agents of any of them from and against all claims, actions, losses, liabilities, damages, and costs (including, but not limited to, attorneys fees) of every nature and description arising out of or resulting from the acts, omissions, or negligence of the Contractor or his employees or agents or by anyone directly or indirectly employed by the Contractor, including Subcontractors, or anyone for whose acts the Contractor may be liable. The Contractor's duties and obligations pursuant to this subparagraph shall survive the termination or expiration of this agreement and shall not be limited by any provision herein requiring the Contractor to maintain specific insurance coverages. Such obligation shall not be construed to negate, abridge, or reduce other rights or obligations, including those of indemnity, which would otherwise exist as to a party or person described in this section."

ARTICLE 4 ARCHITECT

PARAGRAPH 4.1 GENERAL

A. Subparagraph 4.1.2, First Sentence: Delete "Contractor."

B. Delete subparagraph 4.1.3 in its entirety.

PARAGRAPH 4.2 ADMINISTRATION OF THE CONTRACT

A. Change title of this Paragraph from "Administration of the Contract" to "Services of The Architect."

B. Subparagraph 4.2.1

1. First Sentence: Change "administration of the Contract" to "professional services."

C. Subparagraph 4.2.3: In the first sentence delete "reasonably" after "will keep the Owner."

D. Delete Subparagraph 4.2.10

E. Subparagraph 4.2.11: Add to the end of the sub-section as follows:

The parties agree that the Architect's duties under this subparagraph shall be governed by Chapter 30, Section 39P of the General Laws of the Commonwealth of Massachusetts, as amended.

F. Subparagraph 4.2.12: Delete the second sentence.

ARTICLE 5 SUBCONTRACTORS

A. Subparagraph 5.1.1: Delete the first sentence and substitute the following:

"A Subcontractor is any person or entity who has a direct contract with the Contractor to perform any portion of the Work."

Paragraph 5.2

A. Subparagraph 5.2.2: In the second sentence insert "and legally permissible" after "has made reasonable".

B. Subparagraph 5.2.3: Delete the last two sentences and replace as follows:

No increase in the Contract Sum or Contract Time shall be allowed for such change.

C. Subparagraph 5.2.4: Add to the end of the sub-section as follows:

The applicable provisions of Chapter 149, Section 44F of the General Laws of the Commonwealth of Massachusetts shall apply to filed sub-bid subcontractors.

D. Subparagraph 5.4.1: In sub-heading .1 delete "Section 14.2" and replace with "Article 14".

Add new sub-heading .3 as follows:

.3 The Owner may further assign the subcontract to a successor contractor or other entity.

Delete last sentence of subparagraph.

E. Delete Subparagraphs 5.4.2 and 5.4.3.

ARTICLE 6 CONSTRUCTION BY OWNER OR BY SEPARATE CONTRACTORS

PARAGRAPH 6.1

A. Subparagraph 6.1.1: At the end of the first sentence delete "including those portions related to insurance and waiver of subrogation". In the second sentence delete "Claim" after "shall make such" and replace with "claim".

B. Delete Subparagraph 6.1.4 and replace as follows:

§ 6.1.4 The Owner reserves the right to enter any part of the Project site at any time to inspect the Work or to perform other work with its own forces or separate contractors, or to address any emergency situation. Such access is not to be construed to mean partial occupancy by the Owner and no claim for increase in the Contract Time or Sum will be considered unless such Owner's contractors have delayed or damaged the Contractor's Work. The Contractor shall permit the Owner to place and install as much furniture, equipment and other material during the progress of the Work as is possible before completion of the various parts of the Work and agrees that such placing and installation of equipment shall not in any way evidence the completion or acceptance of the Work or any portion of it.__

PARAGRAPH 6.2 MUTUAL RESPONSIBILITY

A. Subparagraph 6.2.2, Last Sentence: After "Contractor," change "so to" to "to so."

B. Subparagraph 6.2.3: Delete the last sentence.

C. Delete Subparagraph 6.2.5 in its entirety.

PARAGRAPH 6.3 OWNER'S RIGHT TO CLEAN UP

A. Last Line: Delete balance of sentence after "the Owner," and replace with "may elect to complete such clean up with his own forces, or to contract with others for this service, either on a specific occasion, or for the balance of the project. In either event, the Architect shall determine, at his sole discretion, what portion of these costs shall be back charged to each Contractor."

ARTICLE 7 CHANGES IN THE WORK

PARAGRAPH 7.2

A. Add new sub-section 7.2.3 as follows:

§ 7.2.3 Upon request of the Owner or the Architect, the Contractor shall without cost to the Owner submit to the Architect, in such form as the Architect may require, an accurate written estimate of the cost of any proposed extra Work or change. The estimate shall indicate the quantity and unit cost of each item of material, and the number of hours of work and hourly rate for each class of labor, as well as a description and

the amounts of all other costs chargeable under the terms of this Article. Unit labor costs for the installation of each item of material shall be shown if required by the Architect. The Contractor shall promptly revise and resubmit each estimate if the Architect determines that it is not in compliance with the requirements of this Article, or that it contains errors of fact or mathematical errors. If required by the Architect, in order to establish the exact cost of new Work added or of previously required Work omitted, the Contractor shall obtain and furnish to the Architect bona fide proposals from recognized suppliers for furnishing any material included in such Work. Such estimates shall be furnished promptly so as to occasion no delay in the Work, and shall be furnished at the Contractor's expense. The Contractor shall state in the estimate any extension of time required for the completion of the Work if the change or extra work is ordered.__

PARAGRAPH 7.3 CONSTRUCTION CHANGE DIRECTIVES

A. Subparagraph 7.3.3: Delete the first sentence of the sub-section and replace as follows:

If the Construction Change Directive provides for an adjustment to the Contract Sum, and if the Contract Documents include a unit price for the work that is the subject of such directive, such unit price shall be the basis of the adjustment to the Contract Sum, unless the Owner, in its sole discretion, chooses another method. If, however, the Contract Documents do not include a unit price for such work, the adjustment shall be based on one of the following methods, as selected by the Owner:

In sub-heading .2 delete “stated in the Contract Documents or” after “Unit prices”.

B. Delete Subparagraph 7.3.4 and replace as follows:

If unit prices are stated in the Contract Documents or subsequently agreed upon, and if quantities originally contemplated are materially changed in a proposed Change Order or Construction Change Directive so that, in the opinion of the Architect, application of such unit prices to quantities of Work proposed will cause substantial inequity to the Owner, the applicable unit prices shall be equitably adjusted.

C. Subparagraph 7.3.5: In the first sentence add after “the Work involved and” as follows: , within five (5) calendar days from receipt of the Construction Change Directive,”; insert “by written notice” after “advise the Architect”; and add to the end of the sub-section as follows: Failure to so advise the Architect within such 5-day period (1) shall be interpreted as Contractor’s agreement with the proposed method of adjustment; (2) shall constitute an irrevocable waiver of any right of the Contractor to submit a claim on account of the method of adjustment; and (3) shall cause the Construction Change Directive to be deemed and constitute a Change Order.

D. Subparagraph 7.3.6: In the second sentence delete “recorded as” after “immediately shall be” and replace with “deemed and shall constitute”.__

E. Subparagraph 7.3.7: Delete and substitute the following:

"7.3.7 If none of the methods set forth in clauses 7.3.3.1, 7.3.3.2 or 7.3.3.3 are agreed upon for determining the cost or credit to the Owner resulting from a change in the work, the cost or credit shall be determined as follows:

7.3.7.1 For charges resulting in additional cost to the Owner, the cost shall be the actual computed cost and shall include the following:

.1 Labor, including foreman, (including Supplements).

.2 Materials entering permanently into the work.

.3 Use of equipment employed directly on the work.

.4 Power and consumable supplies for the operation of power equipment.

.5 Insurance (Workmen's Compensation, Social Security and Unemployment Insurance).

.6 Intentionally Omitted. .7 For work performed by the Contractor with his own forces, there shall be added a percentage fee for the Contractor equal to 15 percent of items (.1) through (.5) above.

.8 For work performed by a Subcontractor, there shall be added a percentage fee for the Subcontractor equal to 10 percent of items (.1) through (.5) above. To this total amount there shall be added an additional percentage fee of 5 percent for the Contractor.

.9 The percentage fee shall be compensation to cover the cost of supervision, overhead, profit and any other general expenses, which are not included in the cost of the work as defined above. Bond costs shall be added or deducted from the total cost of the change directive.

.10 The percentage fees as indicated herein shall also apply to Sub-Paragraph 7.3.3.

.11 Nothing in this article shall excuse the Contractor from proceeding with the extra work as directed.

.12 If Contractors are requested to submit lump sum proposal for extra work, such proposals shall include a detailed breakdown for all labor, materials and equipment, including a breakdown of subcontractors' prices."

.13 All change orders should be fully reviewed and vetted and must have merit before they are submitted to the Architect and Owner for review, otherwise they will be rejected and returned. Change orders for minimal dollar amounts are considered frivolous change orders and will not be reviewed (i.e. change orders foe $100-$500 amount is considered nickel/diming the project.

7.3.7.2 For changes resulting in a credit to the Owner, the cost shall be the estimated costs as they would have been expended according to 7.3.7.1, or the value or prorated value of said work submitted in the Contractor's Schedule of Values, whichever is greater."

F. Subparagraph 7.3.9: Delete the end of the first sentence starting after "Directive to the Owner," and replace as follows:

Amounts for such changes in the Work shall not be included in Applications for Payment. Such amounts shall only be included in an Application for Payment after the adjustment for the Construction Change Directive has been included in a Change Order signed by the Owner and the Contractor.

ARTICLE 8 TIME

PARAGRAPH 8.2

A. Subparagraph 8.2.2: In the first sentence delete ", except by agreement or instruction of the Owner in writing, prematurely".

B. Add new Subparagraphs 8.2.4 and 8.2.5 as follows:

§ 8.2.4 Unless specifically required by law, no payment under this Contract shall be due until the construction schedule, required by Section 3.10, and conforming to the requirements of the General Requirements has been accepted by the Architect.

§ 8.2.5 If the Architect in reviewing any Application for Payment determines that the amount of completed Work in place as certified by the Architect is less than 90% of the Work in place required by the Contractor's construction schedule or schedule of values provided for in Section 9.2, or that there have been delays to critical paths and the Contract completion date will not be met, or that, in the Owner's sole discretion, there is reasonable concern that the Work will not be Substantially Complete by the date required in the Contract Documents, the Contractor shall be required to submit a recovery schedule with a written description of the steps the Contractor intends to take to put the Project back on schedule. At the Owner's option, the Contractor shall take some or all of the following actions at no additional cost to the Owner:

.1 Increase the number of workers on the site, in such quantities and trades as will substantially eliminate the backlog of work;

.2 Increase the number of working hours per shift, shifts per day, working days per week, amount of construction equipment, or any combination of the foregoing, sufficiently to substantially eliminate backlog of work; or

.3 Reschedule activities so that the completion dates initially scheduled will be met.

PARAGRAPH 8.3. DELAYS AND EXTENSIONS OF TIME

A. Subparagraph 8.3.1: Insert "(except weather)" after "casualties or other causes" After "delay authorized by Owner", delete "pending mediation and arbitration". Add to the end of the Subparagraph as follows:

, and notwithstanding anything to the contrary in the Contract Documents, this shall be the Contractor's sole remedy for such delay. Under no circumstances will the Contractor be entitled to an increase in the Contract Sum, or to any other damages, on account of or in connection with any delay, regardless of the cause of such delay, and Contractor agrees not to make any claim for such damages, including, but not limited, claims for damages on account of having to perform out-of-sequence work, claims for extended general conditions costs during any delay or extension of the Contract Time, claims for damages on account of loss of production, and claims for damages on account of hindrances, interruptions or interference with the work, all of which claims are waived. In the event Contractor makes any such claims and such claims are determined to have been precluded by this provision, the Contractor shall pay all attorneys' fees incurred by the Owner in defense of such claims.

B. Delete Subparagraph 8.3.3 in its entirety.

C. Add new Subparagraphs 8.3.4 and 8.3.5 as follows:

§ 8.3.4 No extension of time shall be granted because of seasonal or abnormal variations in temperature, humidity or precipitation, which conditions shall be wholly at the risk of the Contractor, whether occurring within the time originally scheduled for completion or within the period of any extension granted. There shall be no increase in the Contract Sum on account of any additional costs of operations or conditions resulting therefrom.

§ 8.3.5 The Contractor hereby agrees that the Contractor shall have no claim for damages of any kind against the Owner or the Architect on account of any delay in the commencement of the Work and/or any hindrance, delay or suspension of any portion of the Work, whether such delay is caused by the Owner, the Architect, or otherwise, except as and to the extent expressly provided in G.L. c. 30, §39N. The Contractor acknowledges that the Contractor's sole remedy for any such delay and/or suspension will be an extension of time as provided in this Article. __

ARTICLE 9 PAYMENTS AND COMPLETION

PARAGRAPH 9.2

A. Add to the end of Subparagraph as follows:

, and shall be revised if later found by the Architect to be inaccurate. In addition, the Contractor shall submit to the Architect, at least 14 days before the first Application for Payment, a Cash Flow Schedule that shows the percentage completion to be obtained and the total dollar value of Work to be completed as of the first of each month until Substantial Completion. All calculations in the Cash Flow Schedule shall be on the basis of Work in place and shall exclude the value of materials delivered but not in place.

B. Add new Subparagraph 9.2.1 as follows:

§ 9.2.1 The Cash Flow Schedule shall be based on an orderly progression of the Work allowing adequate time for each operation (including adequate time for submission and review of submittals) and leading to a reasonable certainty of Substantial Completion by the date established in the Agreement. The Cash Flow Schedule will be reviewed by the Architect for compliance with the requirements of the Contract Documents. Unless specifically required by law, no payment under this Contract shall be due until the Cash Flow

Schedule has been reviewed and approved by the Architect. The Architect's review of the Cash Flow Schedule shall not impose any duty on the Architect or the Owner with respect to the timing, planning, scheduling or execution of the Work. In particular if the Contractor proposes a Cash Flow Schedule indicating a date of Substantial Completion which is earlier than the Contract Time the Contractor shall not be entitled to additional payment or compensation of any kind if for any reason the full Contract Time is required to achieve Substantial Completion of the Work.__

PARAGRAPH 9.3 APPLICATIONS FOR PAYMENT

A. Subparagraph 9.3.1: Delete 9.3.1.1 and add the following Clauses 9.3.1.3 and 9.3.1.4:

"9.3.1.3 Each application for payment shall include such instruments, evidence, and materials as the Owner, Owner's lender, or the title insurer shall require, including, without limitation, such requisition forms, disbursement requests, indemnities (including evidence of All Risk physical damage insurance coverage on materials and equipment stored off-site), and undertakings as they may specify and an estimate of the total labor done and materials stored at the site (or other location approved in writing by the Owner) or installed in the building, less costs for payment which has been made, and also less retainage specified in 9.6.3. All Applications for Payment shall be made on and in compliance with AIA Form G702, current edition, including a live Excel file unless otherwise specifically defined. Owner will advise Contractor in advance of what documentation it, its lender, or the title insurer will require with each payment application. Contractor shall supply such additional documentation and information as Owner's lender or its inspecting architect shall request in connection with each disbursement to the Contractor. Each application for payment shall be accompanied by the following, all in form and substance satisfactory to the Owner:

.1 A current Contractor's lien waiver and duly executed and acknowledged sworn statement showing all Subcontractors and materialmen with whom the Contractor has entered in subcontracts, the amount of each subcontract, the amount requested for any Subcontractor and materialmen in the requested progress payment and the amount to be paid to the Contractor for such progress payment, together with similar sworn statements from all such Subcontractors and materialmen;

.2 Duly executed waivers of mechanic's lien and materialmen's liens from all Subcontractors and, when appropriate, from materialmen and lower tier Subcontractors establishing payment or satisfaction of payment of all amounts requested by the Contractor on behalf of such entities or persons in any previous Application for Payment: and

.3 All information and materials required to comply with the requirements of the Contract Documents or reasonably requested by the Owner or the Architect"

"9.3.1.4 Contractors shall review a rough draft of each Application for Payment with the Owner's full time field representative and have it signed by him. The signed rough draft shall be submitted to the Architect along with the Application for Payment".

C. Subparagraph 9.3.1: Add the following Clause 9.3.1.4:

"9.3.1.4 Each application for payment shall include a copy of payroll records of the Contractor and Subcontractors for the period covered by the application for payment."

D. Add to the end of the Subparagraph 9.3.2: "The Owner may deduct the amount of such costs from payments due the Contractor."

PARAGRAPH 9.4 CERTIFICATES FOR PAYMENT

A. Subparagraph 9.4.1: Insert at the beginning of the first sentence as follows: Subject to Contractor's compliance with Section 9.3 and the provisions of Section 9.6. Delete remainder of sentence following "copy to the Contractor" and substitute the following:

" , for the percentage of work that the Architect determines to the best of his knowledge has been completed or notify the Contractor and Owner in writing his reasons for withholding a Certificate as provided in Subparagraph 9.5.1."

PARAGRAPH 9.5

A. Add new sub-headings .8, .9, .10, .11, and .12 to Subparagraph 9.5.1 as follows:

.8 failure of the Contractor or mechanical or electrical trade subcontractors to comply with requirements of the General Requirements for maintaining record drawings. The Contractor shall check record drawings each month. Written confirmation that the record drawings are current will be required by the Architect before approval of the Contractor's monthly payment requisition;

.9 failure of the Contractor to provide required warranties under Section 9.3, claims for direct payment, or reasonable evidence indicating probable filing of such claims;

.10 costs incurred by the Owner under Section 10.2.5;

.11 failure of the Contractor to submit prerequisite documentation required by the General Requirements; or

.12 liquidated damages due the Owner pursuant to Section 8.4.

B. Delete Subparagraph 9.5.3 in its entirety.

PARAGRAPH 9.6 PROGRESS PAYMENTS

A. Delete Subparagraph 9.6.3 and replace with the following:

"9.6.3 Retainage: There shall be retained 5 percent on the estimated amounts of completed work-in-place and on materials stored at the project site. Payment for material stored off site is subject to the conditions of Paragraph 9.3.2. No further or partial payments will be made after the time fixed for final completion of the work, or the time to which final completion may be extended under the terms of the Contract, until full and final completion and acceptance of the work. Payments for work under sub-contract of Contractors shall be subject to the above conditions applying to the prime contracts."

B. Subparagraph 9.6.4: Delete "If the Contractor fails to furnish such evidence within seven days," from the beginning of the second sentence.

C. Delete Subparagraph 9.6.5 in its entirety.

D. Delete Subparagraph 9.6.7 in its entirety.

E. Add new Subparagraph 9.6.8 as follows:

§ 9.6.8 Notwithstanding the provisions of Section 9.6 all progress payments shall be made in accordance with Chapter 30, Sections 39F, 39G and 39K (as appropriate) of the General Laws of the Commonwealth of Massachusetts, as amended.

PARAGRAPH 9.7

Delete Paragraph 9.7 in its entirety.

PARAGRAPH 9.8 SUBSTANTIAL COMPLETION

A. Subparagraph 9.8.1: Add to the end of the Subparagraph as follows:

In addition, Substantial Completion for the entire Project shall be achieved only when: (1) the Owner has beneficial occupancy and use of the entire Project for all its intended uses; (2) all Project systems included in the Work are operational and acceptable to the Owner; (3) all governmental inspections for the Project have been successfully completed, all governmental approvals and related paperwork have been delivered to the Owner, and final and unconditional certificates of occupancy for the entire Project have been delivered to the Owner, (4) the only remaining Work to be performed is minor in nature and the remaining Work may reasonably be performed without having a material adverse effect on or materially interfering with the Owner's occupancy and use of the Project and (5) all prerequisites to Substantial Completion defined in the Contract Documents have been completed.

B. Subparagraph 9.8.2: Add to the end of the first sentence as follows:

together with the estimated value of completing or correcting such items (the "Punchlist") and (2) the permits and certificates referenced in Section 13.5. The Architect shall have the right to modify and supplement the Punchlist, including the estimated value of completion or correction.

C. Add the following to the end of 9.8.3:

"Should the Architect, on the basis of this second inspection, determine that the work is not substantially complete, the Contractor shall submit a request for a third inspection. The cost of this and any subsequent inspections, either by the Architect or his Engineers, relative to Substantial Completion shall be back charged to the Contractor."

D. Delete Subparagraph 9.8.5 and replace as follows:

The Certificate of Substantial Completion shall be submitted to the Owner and Contractor by the Architect. The certificate shall state the date of substantial completion, shall state any consequent

responsibilities of the Contractor and the Owner in accordance with the Contract Documents. The Contractor shall complete and correct any incomplete and defective work within forty-five (45) calendar days from the date of Substantial Completion

E. Add the following Subparagraph 9.8.6:

"9.8.6 When the work or major portions thereof are substantially completed the Contractor shall submit to the Owner an application for payment of the remaining amount of the Contract balance. Upon receipt of such application the Owner shall approve and promptly pay the remaining amount of the Contract balance less two times the value of any remaining items to be completed and an amount necessary to satisfy any claims, liens or judgments against the Contractor which have not been suitably discharged. As the remaining items of work are satisfactorily completed or corrected, the Owner shall promptly pay, upon receipt of a requisition, for these items less an amount necessary to satisfy any claims, liens or judgments against the Contractor which have not been suitably discharged. Any claim, liens and adjustments referred to in this section shall pertain to the project and shall be filed in accordance with the terms of the applicable Contract and/or applicable laws."

PARAGRAPH 9.9

A. Subparagraph 9.1: Delete the end of the first sentence starting after "Work at any stage".

Delete the second sentence and replace as follows:

Such partial occupancy or use may commence whether or not the portion is substantially complete, provided the Owner has accepted in writing the responsibilities assigned to it and the Contractor for payments, retainage, if any, security, maintenance, heat, utilities, damage to the Work and insurance.

PARAGRAPH 9.10 FINAL COMPLETION AND FINAL PAYMENT

A. Subparagraph 9.10.1, First Sentence: Place period after the second mention of "Contract Documents" and delete the remainder of the sentence.

B. Add the following to the beginning of subparagraph 9.10.1.

"When contemplating application for final payment, the Contractor shall schedule, one week in advance with the Architect, a joint inspection visit to the Project to determine if the Contract has been fully executed."

C. Add Subparagraph 9.10.1.1 as follows:

"9.10.1.1 Should the Architect, on the basis of this final inspection, determine that the work is not complete, the Contractor shall complete the work, and issue a request for a second inspection. The cost of this and any subsequent inspections, either by the Architect or his Engineers shall be back charged to the Contractor."

ARTICLE 10 PROTECTION OF PERSONS AND PROPERTY

PARAGRAPH 10.2

A. Subparagraph 10.2.1: Add new sub-heading .4 as follows:

.4 work or property of the Owner, its tenants, or other parties at or near the Project site with the Owner's permission.

B. Subparagraph 10.2.5: At the beginning and end of the first sentence: Delete “and” after “10.2.1.2”. Insert “and 10.2.1.4” after “10.2.1.3”. Delete the remainder of the first sentence as follows:

, except damage or loss attributable to acts or omissions of the Owner or Architect or anyone directly or indirectly employed by either of them, or by anyone for whose acts either of them may be liable, and not attributable to the fault or negligence of the Contractor.

Add to the end of the sub-section as follows:

Where the damage or loss presents an immediate danger to the public, the Owner, in its sole discretion and at the Contractor’s expense, may promptly remedy such damage or loss without prior notice to the Contractor.

C. Add new Subparagraphs 10.2.9, 10.2.10, 10.2.11, 10.2.12, and 10.2.13 as follows:

§ 10.2.9 The Contractor shall provide and maintain in good operating condition suitable and adequate fire protection equipment and services, and shall comply with all reasonable recommendations regarding fire protection made by the representatives of the fire insurance company carrying insurance on the Work or by the local fire chief or fire marshal. The area within the site limits shall be kept orderly and clean, and all combustible rubbish shall be promptly removed from the site.

§ 10.2.10 The Contractor shall at all times protect excavations, trenches, buildings and materials from rain water, groundwater, backup or leakage of sewers, drains and other piping, and from water of any other origin and shall remove promptly any accumulation of water. The Contractor shall provide and operate all pumps, piping and other equipment necessary to this end.

§ 10.2.11 The Contractor shall remove snow and ice which might result in damage or delay.

§ 10.2.12 During the progress of the Work and at all times prior to the date of Substantial Completion or occupancy of the Work by the Owner, whichever is earlier, the Contractor shall provide temporary heat, ventilation, and enclosure, adequate to permit the Work to proceed in a timely fashion, and to prevent damage to completed Work or Work in progress, or to materials stored on the premises. The use of the permanent heating and/or ventilation systems for temporary heat and/or ventilation shall be subject to the prior written approval of the Owner and Architect.

§ 10.2.13 [G.L. c.149, §44F(1)] The Contractor shall install weather protection and furnish adequate heat in the protected area from November 1 to March 31.

PARAGRAPH 10.3

A. Subparagraph 10.3.1: Delete the second sentence and replace as follows:

The Contractor shall not cause or permit any introduction onto, under, or near the Owner's property of any hazardous materials or substances as defined by any applicable law, and shall not cause of permit any release, discharge, transportation, storage, or disposal of such materials or substances onto, under, or near the Owner's property or areas near the Owner's property. If the Contractor encounters or recognizes on the site any material known or reasonably believed to be hazardous, including but not limited to asbestos or polychlorinated biphenyl (PCB), the Contractor shall immediately stop Work in the area affected and report the condition to the Owner and Architect in writing. The Contractor and the Owner shall cooperate in implementing measures to remove or contain said material and the Contractor shall comply with all directions of the Architect in the implementation of such removal or containment.

B Delete Subparagraphs 10.3.2, 10.3.3, and 10.3.4.

C. Subparagraph 10.3.5: Delete the remainder of the sentence starting after "obligations under" and replace as follows:

Article 10 or for any violation of applicable law related to the Contractor's noncompliance with the provisions of this Article 10.

D. Delete Subparagraph 10.3.6.

E. Add new Subparagraph 10.3.7 as follows:

§ 10.3.7 The parties anticipate that certain hazardous substances and/or materials may be discovered at the site. When such conditions are set forth in the Contract Documents, the Contractor acknowledges that such conditions have been considered in establishing the Contract Time and Contract Sum. No extension of the Contract Time or increase in the Contract Sum shall be claimed or allowed with respect to any hazardous substances or materials located at the site which were disclosed in the Contract Documents. The Contractor shall strictly comply with all laws, regulations, rules, orders, ordinances and the like related to the excavation, storage, removal and disposal of any such hazardous substances or materials.__

ARTICLE 11 INSURANCE AND BONDS

PARAGRAPH 11.1 CONTRACTOR'S LIABILITY INSURANCE and PARAGRAPH 11.2 OWNER'S LIABILITY INSURANCE

A. Delete Paragraphs 11.1 and 11.2 in their entirety and substitute the following:

"11.1 REQUIREMENTS

11.1.1 The Contractor shall purchase and maintain such insurance as will fully protect him from claims set forth below which may arise in whole or in part out of or result from the Contractor's execution of the Work, whether such execution be by himself or by any Subcontractor or by anyone

directly or indirectly employed by any of them or by anyone for whose acts any of them may be liable.

.1 Claims under workmen's compensation, disability benefit acts;

.2 Claims for damages because of bodily injury, occupational sickness or disease or death of his employees.

.3 Claims for damages because of bodily injury, sickness or disease or death of any person other than his employees.

.4 Claims for damages insured by usual personal injury liability coverage which are sustained (1) by any person as a result of an offense directly or indirectly related to the employment of such person by the Contractor or (2) by any other person; and

.5 Claims for damages because of injury to or destruction of property, including loss of use resulting therefrom.

11.1.2 Certificates of Insurance acceptable to the Owner shall be filed with the Owner prior to commencement of the work. These Certificates shall contain a provision that coverages afforded under the policies will not be cancelled unless at least thirty (30) days' prior, written notice has been given to the Owner. Contractors' insurers to have A.M. Best Ratings of A-, VII or higher.

11.1.3 The Contractor shall furnish Certificates of Insurance of each Subcontractor employed in the performance of the work under this Contract, showing that said Subcontractors have complied with all the requirements of this Contract with reference to insurance to be furnished by such Subcontractor.

11.1.4 The Contractor shall procure and maintain, at his own expense during the Contract time, liability insurance as hereinafter specified:

1. Commercial General Liability ("CGL") a. Limits of Insurance of not less than:
   $1,000,000 Each Occurrence
   $1,000,000 Personal and Advertising Injury
   $2,000,000 General Aggregate
   $2,000,000 Products/Completed Operations Aggregate
   $50,000 Fire Damage
   $5,000 Medical Expense

   b. If the CGL coverage contains a General Aggregate Limit, such General Aggregate shall apply separately to each project.

   c. CGL coverage shall be written, and include the Broad Form Endorsement, on ISO Occurrence form CG 00 01-1093 or a substitute form providing equivalent coverage and shall cover liability arising from yet not limited to premises, operations, independent contractors, products – completed operations, and personal and advertising injury.

d. The Owner, and all other parties required by the Owner shall be included as insureds on the CGLs, using ISO Additional Insured Endorsement CG 20 10 (11 85) or CG 20 10 (10 93) and CG 20 37 (10 01) or CG 20 33 (10 01) and CG 20 37 (10 01) or a substitute providing equivalent coverage to the additional insureds. This insurance for the additional insureds shall be as broad as the coverage provided for the named insured Subcontractor. It shall apply as primary and noncontributing insurance before any other insurance or self-insurance, including any deductible maintained by or provided to the additional insureds.

e. Attached to each certificate of insurance shall be a copy of the Additional Insured Endorsement addressed in section (d) above.

f. Subcontractors shall maintain CGL coverage for itself and all additional insureds for the duration of the project and maintain Completed Operations coverage for itself and each additional insured for at least three (3) years after completion of the Work.

2. Automobile Liability

a. Business Automobile Liability with limits of not less than $1,000,000 combined single limit.

b. Business Auto coverage must include coverage for liability arising out of all owned, leased, hired, and non-owned automobiles. c. The Owner, and all other parties required by the Owner shall be included as additional insureds on the auto policy.

3. Commercial Umbrella

a. General Contractor: Umbrella limits must be at least $20,000,000 with a per project aggregate. Subcontractor: Umbrella limits must be at least $5,000,000 with a per project aggregate.

b. Umbrella coverage must include as insureds all entities that are additional insureds on the CGL.

c. Umbrella coverage for such additional insureds shall apply as primary and noncontributing insurance before any other insurance or self-insurance, including any deductible maintained by, or provided to the additional insureds other than the CGL, Auto Liability, and Employers Liability coverages maintained by the Subcontractor.

4. Workers Compensation and Employers Liability

a. Employers Liability Insurance limits must be at least $500,000 each accident for bodily injury by accident, $500,000 each employee for injury by disease, and $500,000 each disease – policy limit.

b. Where applicable, U.S. Longshore and Harborworkers Compensation Act Endorsement shall be attached to the policy.

c. Where applicable the Maritime Coverage Endorsement (Jones Act) shall be attached to the policy.

5. Pollution Liability Policy:

a. Pollution limit must be at least $1,000,000 per incident with a per project aggregate.

b. Pollution coverage must include as insureds all entities that are additional insureds on the commercial general liability policy.

11.1.5 The following types of Liability Insurance shall be furnished.

11.1.5.1 .1 Contractor's Protective Liability Insurance issued to and covering the liability for damages imposed by law upon the Contractor with respect to all work performed by him under this Contract.

11.1.5.2 .2 Contractor's Protective Liability Insurance issued to and covering the liability for damages imposed by law upon the Contractor with respect to all work under this Contract performed for the Contractor by Subcontractors.

11.1.5.3 .3 Contractual Liability Insurance issued to and covering the liability imposed by Contract upon the Owner for work performed on private land with respect to all operations under the Agreement by the Contractor or by his Subcontractors.

11.1.5.4 .4 Contractual Liability Insurance issued to and covering the liability imposed by Contract upon the Owner for work performed on private land with respect to all operations under the Agreement by the Contractor or by his Subcontractors.

11.1.6 The Contractor shall acquire and maintain Fire Insurance, All Risk, Builders Risk Completed Value Insurance Policy and installation floater, upon the project to the full insurable value thereof. The named insured shall be the Owner, Wendel WD Architecture, Engineering, Surveying & Landscape Architecture P.C., the Contractor and Subcontractors as their interest may appear. This provision shall in no way release the Contractor or Contractor's surety from obligations under the Contract Documents to fully complete the project. This insurance shall cover all the work in place and all materials stored at the building site or at any other location or while in transit, whether or not covered by partial payments made by the Owner during the contract time and until work is accepted by the Owner.

PARAGRAPH 11.3 PROPERTY INSURANCE

A. Delete Subparagraph 11.3.1 and replace as follows:

1. The Contractor shall purchase and maintain property insurance upon the entire Work at the site to the full insurable value thereof. Coverage for such liability insurance shall be provided by a company or companies reasonably acceptable to the Owner. Contractor shall furnish to Owner written confirmation as to the insurance carrier's most current financial ratings prior to commencing work. Such insurance shall include the interests of the Owner, the Contractor, Subcontractors and Sub-subcontractors in the work and shall insure against the perils of fire and extended coverage and shall include "all risks" insurance for physical loss or damage including without duplication, theft, vandalism and malicious mischief. This insurance shall also cover portions of the Work stored off the site or in transit. If this insurance is written with stipulated amounts deductible, the Owner shall not be responsible for any difference between the payments made by the insurance carrier and the claim. The policy shall contain a provision that coverages afforded under policies will not be canceled or allowed to expire until at least 30 days' written notice has been given to the Owner. The Owner shall be named insured within the policy.

2. Delete Clauses 11.3.1..1, 11.3.1.2, 11.3.1.3, 11.3.1.4 and 11.3.1.5 in their entirety.

D. Delete Subparagraphs 11.3.2, 11.3.3, 11.3.4 and 11.3.5in their entirety.

E. Subparagraph 11.3.6: Delete in its entirety and substitute the following:

“11.3.6 Before an exposure to loss may occur, the Contractor shall file with the Owner two certified copies of the policy or policies providing this Property Insurance coverage, each containing those endorsements specifically related to the Project. Each policy shall contain a provision that the policy will not be cancelled or allowed to expire until at least 30 days' prior written notice has been given to the Contractor.”

F. Delete Subparagraph 11.3.7 in its entirety and replace with the following:

Waiver of Subrogation: Contractor and any Subcontractors waive all rights against Owner, Architect, and their agents, officers, directors, and employees for recovery of damages to the extent these damages are covered by commercial general liability, commercial umbrella liability, business automobile liability, or workers compensation and employers liability insurance maintained per the requirements stated above.

G. Subparagraph 11.3.8:

1. Line 1: Change “Owner's” to “this.”

2. Lines 1 & 2: change “Owner” to “Contractor.”

H. Subparagraph 11.3.9, Lines 1, 2, 3: Change “Owner” to “Contractor.”

I. Subparagraph 11.3.10, Lines 1, 2, 3: Change “Owner” to “Contractor.”

PARAGRAPH 11.4 PERFORMANCE BOND AND PAYMENT BOND

A. Delete Subparagraphs 11.4.1 and 11.4.2 in their entirety and replace with 11.4.1 through 11.4.5 as follows:

"11.4.1 Prior to execution of the contract the successful bidder shall furnish the Owner with Payment and Performance bonds covering the faithful performance of the contract and the payment of all obligations arising thereunder, respectively.

11.4.2 Bonds shall be in the amount of one hundred percent of the contract amount.

11.4.3 Bonds shall be prepared on forms satisfactory to the Owner.

11.4.4 Bonds shall include coverage of all obligations of the Contractor during the specified guarantee period.

11.4.5 Surety Company or Companies must be qualified to do business in the Commonwealth of Massachusetts and acceptable to the Owner."

ARTICLE 13 MISCELLANEOUS PROVISIONS

PARAGRAPH 13.1 GOVERNING LAW

A. Delete text in its entirety and replace with the following:

"The State of Massachusetts, County of Hampden shall be the respective jurisdiction and venue for any legal action arising out of or in connection with this Contract. The laws of the State of Massachusetts shall apply with regard to construction, interpretation, performance and information pertaining to this Contract."

PARAGRAPH 13.2

A. Subparagraph 13.2.1: In the second sentence delete "Except as provided in Section 13.2.2".

B. Delete Subparagraph 13.2.2 in its entirety.

PARAGRAPH 13.5

A. Delete Subparagraph 13.5.4 and replace as follows:

The Contractor shall obtain and deliver promptly to the Architect any occupancy permit and any certificates of final inspection of any part of the Contractor's work and operating permits for any mechanical apparatus, such as elevators, escalators, boilers, air compressors, etc., which may be required by law to permit full use and occupancy of the premises by the Owner. Receipt of such permits or certificates by the Architect shall be a condition precedent to Substantial Completion of the Work.

PARAGRAPH 13.7

A. 13.7 Delete section 13.7 and replace with the following:

It is expressly agreed that the obligations of the Contractor hereunder arise out of contractual duties, and that the failure of the Contractor to comply with the requirements of the Contract Documents shall constitute a breach of contract, not a tort, for the purpose of applicable statutes of limitation and repose. Any cause of action which the Owner may have on account of such failure shall be deemed to accrue only when the Owner has obtained actual knowledge of such failure, not before.

PARAGRAPH 13.8

A. 13.8 Add new Paragraph 13.8 as follows:

§ 13.8 LIMITATION OF LIABILITY

§ 13.8.1 The Owner shall be liable, if ever, only to the extent of its interest in the Project; and no officer, director, partner, agent or employee of the Owner shall ever be personally or individually liable with respect to this Contract or the Work. Each Subcontract shall include the foregoing limitation, which shall be effective if the Owner ever succeeds to the Contractor's rights and obligations under a Subcontract.

PARAGRAPH 13.9

A. Add new Paragraph 13.9 as follows:

§ 13.9 DEFENSE OF SUITS

§ 13.9.1 The Contractor shall be responsible for, shall defend and pay all costs, attorneys' fees and liabilities both direct and indirect as a result of suits arising out of this Contract.

§ 13.9.2 Neither final acceptance nor occupation of the premises by the Owner shall relieve the Contractor of responsibility for all claims for labor, materials, and equipment arising out of this Contract.

§ 13.9.3 The Contractor shall indemnify and hold harmless the Owner and the Architect and their agents and employees from and against all claims, damages, losses, and expenses including attorneys' fees arising out of or resulting from the performance of the work.__

ARTICLE 14 TERMINATION OR SUSPENSION OF THE CONTRACT

PARAGRAPH 14.1

A. Subparagraph 14.1.1: Insert in the beginning of the first sentence as follows: “Provided that the Contractor is not in breach of any of its obligations under the Contract,”

Delete sub-headings .1, .2, and .4.

B. Delete Subparagraph 14.1.2.

C. Delete Subparagraph 14.1.3 and replace as follows:

If one of the above reasons exists, the Contractor may, upon seven days written notice to the Owner and Architect, terminate the Contract and recover from the Owner payment for Work properly executed and for all materials or equipment not incorporated in the Work, but delivered and suitably stored at the site. The payment for materials or equipment stored at the site shall be conditioned upon submission by the Contractor of bills of sale or such other evidence as is satisfactory to the Owner to establish the Owner's title to such material or equipment or otherwise protect the Owner's interest.

D. Delete Subparagraph 14.1.4.__

PARAGRAPH 14.2

A. Subparagraph 14.2.1: Delete “repeatedly” from the beginning of sub-headings .1 and .3.

Insert new sub-headings .4 and .5 after sub-heading .3 as follows:

.4 becomes the subject of a voluntary petition in bankruptcy or any voluntary proceeding related to insolvency, receivership, liquidation or comparable proceeding or any assignment for the benefit of creditors or becomes the subject of an involuntary petition in bankruptcy or any involuntary proceeding related to insolvency, receivership, liquidation or comparable proceeding or any assignment for the benefit of creditors.

.5 submits three successive Applications for Payment, each of which indicate that the actual Work completed is less than 90 percent of the values estimated in the construction schedule (submitted by the Contractor pursuant to Section 3.10.1) to be completed by the respective dates.

B. Subparagraph 14.2.2: In the first sentence delete “,upon certification by the Initial Decision Maker that sufficient cause exists to justify such action,”.

Delete the second sentence of sub-heading .3.

C. Subparagraph 14.2.4: In the first sentence: Insert “all costs and losses incurred by the Owner on account of the Contractor’s failure to comply with the Contract Documents and” after “the Work, including”. Insert “and Owner’s Project Manager’s” after “for the Architect’s”.

Delete the last sentence of the sub-section and replace as follows:

“The Owner shall be entitled to hold all amounts due the Contractor at the date of termination until all of the Owner’s damages have been established, and to apply such amounts to such damages.”

PARAGRAPH 14.3

A. Subparagraph 14.3.2 Insert “, subject to compliance with the conditions of Section 8.3.” at the end of the first sentence. Delete the second sentence.

PARAGRAPH 14.4 TERMINATION BY THE OWNER FOR CONVENIENCE

A. Subparagraph 14.4.2: In sub-heading .3 delete “and” after “all existing contracts” and replace with “except for subcontracts, if any, that Owner elects to assume, terminate all”

B. Delete Subparagraph 14.4.3 and replace with the following: In the event that the Contract is terminated for the Owner’s convenience, the Contractor shall be reimbursed in accordance with the Contract Documents for all Work properly performed up to the termination date, and for all materials or equipment not incorporated in the Work, but delivered and suitably stored at the site. Payment for materials or equipment stored at the site shall be conditioned upon submission by the Contractor of bills of sale or such other evidence as is satisfactory to the Owner to establish the Owner's title to such material or equipment or otherwise protect the Owner's interest. The Contractor shall not be entitled to payment for overhead and profit on the Work not executed.

ARTICLE 15 CLAIMS AND DISPUTES

PARAGRAPH 15.1 CLAIMS

A. Subparagraph 15.1.1: Delete sub-section 15.1.1 and replace as follows:

§ 15.1.1 DEFINITION

The word “Claim” shall mean a written demand by the Contractor for an increase in the Contract Time or the Contract Sum. The Contractor is responsible for substantiating its Claims. The word “Claim” shall not include claims by the Owner. The Owner may withhold from the Contractor the value of any claims against the Contractor in accordance with Massachusetts General Laws, including, but not limited to, Sections 39G and 39K of Chapter 30.

B. Subparagraph 15.1.2: Delete sub-section 15.1.2 and replace as follows:

§ 15.1.2 NOTICE OF CLAIMS

Contractor must initiate Claims within fourteen (14) calendar days after occurrence of the event giving rise to such Claim by written notice to the Architect and the Owner. Such written notice must (1) be signed by the Contractor; (2) conspicuously identify on its face that the notice serves as a notice of claim; (3) explain in sufficient detail the basis of the Claim; (4) identify the date of the event giving rise to such Claim; and (5) state the exact dollar amount of the increase in the Contract Sum being requested, if any, and the number of days extension to the Contract Time sought, if any.

C. Subparagraph 15.1.3: Delete “Section 9.7 and” after “as provided in”.

Delete the final sentence.__

D. Subparagraph 15.1.5: First Sentence: Delete period after “given” and add “and a statement of why additional time is necessary.” In the second sentence delete “of cost and” after “include an estimate”.

E. Delete Subparagraph 15.1.5.2

F. Delete Subparagraph 15.1.6

PARAGRAPH 15.2 INITIAL DECISION

A. Subparagraph 15.2.1: In the third sentence: Delete "mediation" after "condition precedent" and delete the end of the sentence beginning after "payment is due".

B. Delete Subparagraph 15.2.2 and replace as follows:

The Initial Decision Maker will review Claims and within 30 days of the receipt of the Claim take one or more of the following actions: (1) request additional supporting data from the Contractor; (2) notify the Contractor that the Initial Decision Maker requires additional time to resolve the Claim; and/or (3) reject the Claim in whole or in part.

C. Subparagraph 15.2.3: Delete the last sentence.

D. Delete Subparagraph 15.2.4 and replace as follows:

If the Architect requests the Contractor to furnish additional supporting data in connection with a Claim, the Contractor shall provide such data within ten (10) calendar days of such request. If the Contractor is of the opinion that it is impossible to provide such data within such time, the Contractor shall notify the Architect of such opinion in writing within such ten-day period. If the Architect determines that it is impossible for such data to be provided within such ten-day period through no fault of the Contractor, the Contractor shall provide such data within 30 calendar days of the Architect's request, unless the Architect fixes another date, in which case the data must be submitted by the date so fixed. Failure of the Contractor to provide such data within the time prescribed herein shall result in the irrevocable waiver of the Claim.

E. Subparagraph 15.2.5: Delete the last sentence and replace as follows: The rejection of a claim by the Architect and any decisions of the Owner with respect to the same, and the interpretations by the Architect of the plans, drawings and specifications, shall be final and binding on the Contractor in accordance with Section 39J of Chapter 30 of the Massachusetts General Laws.

F. Delete Subparagraph 15.2.6 in is entirety.

G. Subparagraph 15.2.7: Delete the capitalized word, "Claim," and replace with lower-case word, "claim," in the first and second sentences.

H. Delete Subparagraph 15.2.8.

PARAGRAPH 15.3 MEDIATION

A. Delete this paragraph in its entirety.

DOCUMENT 007150 – PREVAILING WAGE RATES

1.1 PREVAILING WAGE RATES

A. The Commonwealth of Massachusetts Executive Office of Labor and Workforce Development Department of Labor Standards Prevailing Wage and Davis-Bacon Wage Rates are bound herein immediately following this page.

B. For each labor classification required to construct the project, the contractor shall pay the higher of the applicable Davis-Bacon wage rate or the State prevailing wage rate.

END OF DOCUMENT 007150

DOCUMENT 007150 – PREVAILING WAGE RATES

1.1 PREVAILING WAGE RATES

A. The Commonwealth of Massachusetts Executive Office of Labor and Workforce Development Department of Labor Standards Prevailing Wage and Davis Bacon Wage Rates are bound herein immediately following this page.

END OF DOCUMENT 007150

CERTIFICATION OF TAX COMPLIANCE

Pursuant to Chapter 62C of the Massachusetts General Laws, Section 49A(b), I,

_____, authorized signatory for _____, do hereby certify under the pains and penalties of perjury that said contractor has complied with all laws of the Commonwealth of Massachusetts relating to taxes, reporting of employees and contractors, and withholding and remitting child support.

Signature: _____

Title: _____

Tax Identification Number: _____

Date: _____

LABOR HARMONY & OSHA TRAINING CERTIFICATION

Pursuant to Massachusetts General Laws Chapter 30, Section 39S, and Chapter 149, Section 44A, and any other applicable statutes or regulations, the undersigned bidder or contractor hereby certifies under the penalties of perjury that:

1. **Labor Harmony**
   The undersigned is able to furnish labor that can work in harmony with all other elements of labor employed or to be employed in the work proposed by this bid/contract.
2. **OSHA Safety Training**
   a. All employees to be employed at the worksite will have successfully completed a course in construction safety and health approved by the United States Occupational Safety and Health Administration (OSHA) of at least ten (10) hours in duration *at the time the employee begins work*, and documentation of successful completion of said course shall be furnished with the first certified payroll report for each such employee.

   b. All employees to be employed in the work subject to this bid/contract have successfully completed a course in construction safety and health approved by OSHA of at least ten (10) hours in duration.

Company Name: _____

Signature: _____

Authorized Signatory Name: _____

Title: _____

Date: _____

RIGHT-TO-KNOW LAW CERTIFICATION

The undersigned hereby certifies that the Proposer, if awarded this Contract, will fully comply with the Massachusetts Right-to-Know Law, M.G.L c. 111F, including:

1. Obtaining a Materials Safety Data Sheet, (MSDS) for all substances or mixtures of substances that appear on the Massachusetts Substance List that the Contractor or any of its subcontractors brings to or uses on the work site and will keep a copy of that MSDS on the work site of this Contract.

2. Labeling each container of a substance or mixture of substances on the Massachusetts Substance List as required in Section 7 of the Act.

3. Providing the same training and non-technical instruction that the Contractor is required to provide under Section 15 of the Act to all PVTA employees who are exposed to the substance or to the mixture of substances. Training shall include instruction on the nature and effects of any substance or mixture of substances listed on the Massachusetts Substance List, which the Offeror or any of his/her subcontractors brings to or uses on the worksite.

4. Providing PVTA employees while at the work site, with the same protective equipment that the Contractor and its subcontractors provide to its employees.

Authorized Signature: _____

Name: _____

Firm: _____

Title: _____

Date: ____/____/____

CERTIFICATION REGARDING COMPANIES DOING BUSINESS WITH OR IN NORTHERN IRELAND

Pursuant to M.G.L. c. 7, §§ 22C–22F, the undersigned certifies that, if the Contractor or any of its affiliates conducts business operations in Northern Ireland, such business operations do not discriminate in employment, compensation, or the terms, conditions, and privileges of employment on account of religious or political belief, and the Contractor promotes freedom of workplace opportunity and the rights of individuals, consistent with the MacBride Principles.

If the Contractor has no business operations in Northern Ireland, it so certifies below.

In addition, the Contractor agrees to notify PVTA in writing of any change in circumstances with respect to this certification during the term of the Contract and understands that any misrepresentation or failure to notify may result in termination of the Contract or other sanctions as provided by law.

Signed under the pains and penalties of perjury this ____ day of _____, _____

Authorized Signature: _____

Name: _____

Firm: _____

Title: _____

ANTI-BOYCOTT CERTIFICATION

Pursuant to the provisions of M.G.L. c. 151E and Section 999(b)(3) and (4) of the Internal Revenue Code of 1954, as amended, the Contractor certifies that, during the term of this Contract, neither it nor any affiliated company participates in or cooperates with an international boycott, nor engages in conduct declared unlawful by M.G.L. c. 151E, § 2.

In the event of a breach of this certification, the Pioneer Valley Transit Authority shall have the right to rescind this Contract and pursue such other remedies as provided by law or equity.

For purposes of this certification, an "affiliated company" means any business entity of which at least fifty-one percent (51%) of the ownership interests are directly or indirectly owned or controlled by the Contractor; or which directly or indirectly owns or controls at least fifty-one percent (51%) of the ownership interests of the Contractor; or any business entity that is under common ownership or control with the Contractor.

Authorized Signature: _____

Name: _____

Firm: _____

Title: _____

Date: ____/____/____

PROHIBIT USE OF UNDOCUMENTED WORKERS CERTIFICATION

It is the policy of the Commonwealth of Massachusetts Executive Branch to prohibit the use of undocumented workers in connection with the performance of state contracts. This certification is required under Executive Order No. 481, effective February 23, 2007.

As a condition of receiving Commonwealth funds under this contract, the Contractor hereby certifies and agrees as follows:

1. The Contractor shall not knowingly use undocumented workers in connection with the performance of any Executive Branch contract.

2. Pursuant to federal law, the Contractor shall verify the immigration status of all workers assigned to such contracts through proper completion of the federal Form I-9 or other lawful verification procedures, without engaging in unlawful discrimination.

3. The Contractor shall not knowingly or recklessly alter, falsify, or accept altered or falsified documents from any such worker(s).

4. The Contractor understands and agrees that a breach of any of these terms during the contract period may be regarded as a material breach, subjecting the Contractor to sanctions including, but not limited to, monetary penalties, withholding of payments, suspension, or termination of the contract.

By signing below, the undersigned certifies under the pains and penalties of perjury that the Contractor will comply with the requirements of Executive Order No. 481 throughout the term of the contract.

Authorized Signature: _____

Name: _____

Firm: _____

Title: _____

Date: ____/____/____

CONFLICT OF INTEREST CERTIFICATION

The undersigned hereby certifies under the pains and penalties of perjury that the Proposer and all of its employees, agents, and subcontractors shall comply with the **Massachusetts Conflict of Interest Law**, **M.G.L. c. 268A**, and with all **conflict of interest provisions contained in these Contract Documents**, including but not limited to those stated in **Section 6.7** of the General Conditions.

The Proposer further certifies that:

1. No officer, employee, agent, or public official of the Commonwealth or the Authority has or shall have any direct or indirect financial or personal interest in this procurement or any resulting contract;
2. The Proposer has not offered or given, and shall not offer or give, any gratuity, favor, or thing of value to any officer, employee, or agent of the Authority with the intent to influence the awarding or administration of this contract; and
3. The Proposer understands that violation of **M.G.L. c. 268A** may constitute grounds for civil or criminal penalties and for termination of any resulting contract for cause.

Authorized Signature: _____

Name: _____

Firm: _____

Title: _____

Date: ____/____/____

PUBLIC CONTRACTOR DEBARMENT CERTIFICATION

The undersigned certifies under penalty of perjury that the said undersigned is not presently debarred from the award of any contract for public (local, state, or federal) work by the Federal Government or in the Commonwealth of Massachusetts under provisions of 2 CFR 180, subpart C, as adopted and supplemented by U.S. DOT regulations at 2 CFR Part 1200 and Massachusetts G.L. c. 29, §29F, G.L. c. 149, §44C or G.L. c. 7, §38D, or any other applicable state or federal debarment provision, statute, rule or regulation.

Company Name: _____

Signature: _____

Authorized Signatory Name: _____

Title: _____

Date: _____

CERTIFICATION OF ELIGIBILITY

_____ hereby certifies that neither
(Name of Company)

it nor its "principals" is included on the U.S. Comptroller General's Debarred Proposers List.

Further, the Proposer certifies to the best of its knowledge and belief that it and its principals:

Are not presently debarred, suspended, proposed for debarment, declared ineligible or voluntarily excluded from participating in this transaction by any Federal department or agency.

Have not, within a three-year period preceding the date of this Proposal, been convicted of or had a civil judgment rendered against it for commission of fraud or a criminal offense in connection with obtaining, attempting to obtain, or performing a public (Federal, State or local) transaction or contract under a public transaction, violation of Federal or State anti-trust statues or commission of embezzlement, theft, forgery, bribery, falsification or destruction of records, making false statement, or receiving stolen property.

Are not presently indicted for or otherwise criminally or civilly charged by a governmental entity (Federal, State or local) with commission of any of the offenses enumerated in Paragraph B of this Certification.

Do not have any unpaid Federal tax liability that has been assessed, for which all judicial and administrative remedies have been exhausted or have lapsed, and that is not being paid in a timely manner pursuant to an agreement with the authority responsible for collecting the tax liability.

Was not convicted of the felony criminal violation under any Federal law within 24 months preceding the date of this Proposal.

Have not, within a three-year period preceding the date of this Proposal, had one or more public transactions (Federal, State or local) terminated for cause or default.

Where the Proposer is unable to certify to any of the statements in this certification, such Proposer shall include an explanation in such regard with its Proposal.

(Check One)

_____ I DO CERTIFY _____ I DO NOT CERTIFY

Authorized Signatory Name: _____

Signature: _____

Title: _____

Date: _____/_____/_____

CERTIFICATION OF NON-COLLUSION

The Undersigned certifies, under penalties of perjury:

That this Proposal has been made by the Proposer independently, and has been submitted without collusion, and without any agreement, understanding, or planned common course of action with any other vendor of materials, supplies, equipment, or services described in this procurement document, designed to limit independent bidding or competition;

That the contents of the proposal have not been communicated by the Proposer or its employees or agents to any person not an employee or agent of the Proposer or it's surety or any bond furnished with the proposal and will not be communicated to any such person prior to the official awarding of this procurement.

That I have fully informed myself regarding the accuracy of the statement made in the certificate.

SIGNATURE: _____

NAME: _____

FIRM: _____

TITLE: _____

DATE: ____/____/____

CERTIFICATION OF RESTRICTIONS ON LOBBYING

I, _____, of _____,
Name & Title Name of Firm

hereby certify that:

No Federal appropriated funds have been paid or will be paid, by or on behalf of the undersigned, to any person for influencing or attempting to influence an officer or employee of an agency, a member of Congress, an officer or employee of Congress, or an employee of a member of Congress in connection with the awarding of any Federal contract, the making of any Federal grant, the making of any Federal loan, the entering into of any cooperative agreement, and the extension, continuation, renewal, amendment, or modification of any Federal contract, grant, loan or cooperative agreement.

If any funds other than Federal appropriated funds have been paid or will be paid to any person for making lobbying contacts to an officer or employee of any agency, a member of Congress, an officer or employee of Congress, or an employee of a member of Congress in connection with this federal contract, grant, loan or cooperative agreement, the undersigned shall complete and submit Standard Form, "Disclosure Form to Report Lobbying," in accordance with its instruction as amended.

The undersigned shall require that the language of this certification be included in the award documents for all subawards at all tiers (including subcontracts, subgrants, and contracts under grants, loans, and cooperative agreements), and that all subrecipients shall certify and disclose accordingly.

The undersigned acknowledges that this certification is a material representation of fact, upon which reliance is placed at the time that the transaction concerned herewith was made or entered into, and that submission of this certification is a prerequisite for making or entering into such transaction imposed by Section 1352, Title 31, U.S. Code as amended. Any person who fails to file the required certification shall be subject to civil penalty of not less than $10,000, and not more than $100,000 for each such failure.

[Note: Pursuant to 31 U.S.C. § 1352(c)(1)-(2)(A), any person who makes a prohibited expenditure or fails to file or amend a required certification or disclosure form shall be subject to a civil penalty of not less than $10,000 and not more than $100,000 for each such expenditure or failure.]

The undersigned certifies or affirms the truthfulness and accuracy of each statement of its certification and disclosure, if any. In addition, the undersigned understands and agrees that the provisions of 31 US Code A3801, et seq., apply to this certification and disclosure, if any.

Executed this _____ day of _____, 20_____.

By: _____
Signature & Title of Authorized Official

BUY AMERICA MANUFACTURED GOODS CERTIFICATION

(Steel, Iron, Manufactured Products & Construction Materials)

(To be submitted with each bid or offer equal to or greater than $150,000)

Certification is a requirement for the procurement of steel, iron, manufactured products, and/or construction materials in Compliance with 49 U.S.C. 5323(j) and the applicable regulations in 49 CFR part 661. As well as 2 CFR §200.322 "Domestic Preferences for Procurements" which references §184.

SELECT AND COMPLETE ONLY ONE OF THE FOLLOWING CERTIFICATIONS:

Certificate of Compliance with Buy America Requirements 49 U.S.C. 5323(j)(1)

The bidder or offeror hereby certifies that it will comply with the requirements of 49 U.S.C. 5323(j) (1) and the applicable regulations in 49 CFR Part 661.

Signature: _____

Title: _____

Firm: _____

Date: _____

Certificate of Non-Compliance with Buy America Requirements 49 U.S.C. 532 (j)(1)

The bidder or offeror hereby certifies that it cannot comply with the requirements of 49 U.S.C. 5323(j), but it may qualify for an exception to the requirement pursuant to 49 U.S.C. 5323(j)(2), as amended, and the applicable regulations in 49 CFR 661.7.

Signature: _____

Title: _____

Firm: _____

Date: _____

NOTICE: Sign only one of the above statements – either Compliance OR Non-Compliance (not both). Signing both WILL render your bid NON-RESPONSIVE.

CONTRACTOR'S STATEMENT ON SUB-CONTRACTORS

1. There are NO sub-Contractors associated with this proposal.

Authorized Signee: _____

Printed Name: _____

Title: Date: _____

For (Company):_____

OR

2. Listed below are sub-Contractors associated with this proposal. Additional sheets are attached as required. I _____have also attached appropriate Disadvantage Business Enterprise Certifications.

Name of Company: _____

Address: _____

Contact Person: _____

Telephone #: _____

E-mail:_____

Name of Company: _____

Address: _____

Contact Person: _____

Telephone #: _____

E-mail:_____

FEDERALLY REQUIRED CONTRACT CLAUSES

The FRC Clauses shall apply equally to the Contractor as they do to the Authority, and the Contractor shall indemnify and hold the Authority harmless for any liability it may incur as a result of the Contractor's failure to act in compliance with the FRC Clauses.

No Federal Government Obligations to Third Parties

In connection with the Project, the Contractor acknowledges that, absent the Federal Government's express written consent, the Federal Government shall not have any commitment or liability related to the Underlying Agreement, to any Third Party Participant at any tier, or to any other person or entity that is not a party (FTA or the Recipient) to the Underlying Agreement; and notwithstanding that the Federal Government may have concurred in or approved any Solicitation or Third Party Agreement at any tier that may affect the Underlying Agreement, the Federal Government does not and shall not have any commitment or liability to any Third Party Participant or other entity or person that is not a party (FTA or the Recipient) to the Underlying Agreement. The Contractor shall include the substance of this clause in each subcontract (FTA Master Agreement v33 § 3(l)).

False or Fraudulent Statements or Claims

The Contractor acknowledges and agrees that:

(1) Civil Fraud. The Program Fraud Civil Remedies Act of 1986, as amended, 31 U.S.C. § 3801 et seq., and U.S. DOT regulations, "Program Fraud Civil Remedies," 49 C.F.R. Part 31, apply to the Contractor's activities in connection with the Project. By executing the Grant Agreement, Cooperative Agreement, or Contract for the Project, the Contractor certifies or affirms the truthfulness and accuracy of each statement it has made, it makes, or it may make in connection with the Project. In addition to other penalties that may apply, the Contractor also acknowledges that if it makes a false, fictitious, or fraudulent claim, statement, submission, certification, assurance, or representation to the Federal Government, the Federal Government reserves the right to impose on the Contractor the penalties of the Program Fraud Civil Remedies Act of 1986, as amended, to the extent the Federal Government deems appropriate.

(2) Criminal Fraud. If the Contractor makes a false, fictitious, or fraudulent claim, statement, submission, certification, assurance, or representation to the Federal Government or includes a false, fictitious, or fraudulent statement or representation in any agreement with the Federal Government in connection with a Project authorized under 49 U.S.C. chapter 53 or any other Federal law, the Federal Government reserves the right to impose on the Contractor the penalties of 49 U.S.C. § 5323(l), 18 U.S.C. § 1001 or other applicable Federal law to the extent the Federal Government deems appropriate (FTA Master Agreement v33 § 4)).

Access to Third Party Contract Records and Audits

The Contractor agrees to provide, and require its third party subcontractors (at as many tiers as required), to provide to the U.S. Secretary of Transportation and the Comptroller General of the United States or their duly authorized representatives, access to all third party contract records (at

any tier) pertinent to the Federal award to perform audits, execute site visits, or for any other official use and to any further extent required by 49 U.S.C. § 5325(g), and 2 CFR §§ 200.337–338. The Contractor further agrees to require its third party subcontractors (at any tier), to provide sufficient access to third party procurement records as needed for compliance with Federal regulations or to assure proper Project management as determined by FTA (FTA Master Agreement v33 § 16(s)).

Changes to Federal Requirements

The Contractor acknowledges that Federal laws and regulations control Project award and implementation. The Contractor also acknowledges that Federal directives, as defined in the Master Agreement, set forth Federal terms applicable to the Project, except to the extent that FTA determines otherwise in writing. Thus, FTA strongly encourages adherence to applicable Federal directives. The Contractor understands and agrees that unless FTA has provided express written approval of an alternative procedure or course of action differing from a procedure or course of action set forth in the applicable Federal directive, the Awarding Authority and/or the Contractor may incur a violation of the terms of the Grant Agreement or Cooperative Agreement or the Master Agreement if it implements an alternative procedure or course of action not approved by FTA.
The Contractor understands and agrees that Federal laws, regulations, and directives applicable to the Project and to the Applicant on the date on which the FTA Authorized Official awards Federal assistance for the Project may be modified from time to time. In particular, new Federal laws, regulations, and directives may become effective after the date on which the Applicant executes the Grant Agreement or Cooperative Agreement for the Project, and might apply to that Grant Agreement or Cooperative Agreement. The Contractor understands that the most recent of such Federal laws, regulations, and directives will govern the administration of the Project at any particular time, except to the extent that FTA determines otherwise in writing.
FTA's written determination may take the form of a Special Condition, Special Requirement, Special Provision, or Condition of Award within the Grant Agreement or Cooperative Agreement for the Project, a change to an FTA directive, or a letter to the Applicant/Contractor signed by the Federal Transit Administrator or his or her duly authorized designee, the text of which modifies or otherwise conditions a specific provision of the Grant Agreement or Cooperative Agreement for the Project or the Master Agreement. To accommodate changing Federal requirements, the Contractor agrees to include in each agreement with each subcontractor implementing the Project notice that Federal laws, regulations, and directives may change and that the changed requirements will apply to the Project, except to the extent that FTA determines otherwise in writing. All standards or limits in the Grant Agreement or Cooperative Agreement for the Project, and in the Master Agreement are minimum requirements, unless modified by FTA. The Contractor and each of its subcontractors shall comply with all applicable FTA regulations, policies, procedures, and directives, including those listed in FTA Master Agreement v33, 2 CFR Part 200, FTA Circular 4220.1G, and 49 U.S.C. Chapter 53, as amended by the FAST Act and the Infrastructure Investment and Jobs Act (IIJA/BIL) (FTA Master Agreement v33 § 3(i)(6)).

Termination

Upon written notice, the Contractor understands that the Federal Government may suspend or terminate all or any part of the Federal assistance to be provided for the Project if the Contractor has violated the terms of the Grant Agreement or Cooperative Agreement for the

Project including the Master Agreement, or if the Federal Government determines that the purposes of the laws authorizing the Project would not be adequately served by the continuation of Federal assistance for the Project. The Contractor understands and agrees that any failure to make reasonable progress on the Project or violation of the Grant Agreement or Cooperative Agreement for the Project, or the Master Agreement that endangers substantial performance of the Project shall provide sufficient grounds for the Federal Government to terminate the Grant Agreement or Cooperative Agreement for the Project. In general, termination of Federal assistance for the Project will not invalidate obligations properly incurred by the Contractor before the termination date to the extent those obligations cannot be canceled. If, however, the Federal Government determines that the Contractor has willfully misused Federal assistance by failing to make adequate progress, failing to make reasonable and appropriate use of Project property, or failing to comply with the terms of the Grant Agreement or Cooperative Agreement for the Project including this Master Agreement, the Federal Government reserves the right to require the Contractor to refund the entire amount of Federal assistance provided for the Project or any lesser amount as the Federal Government may determine. Expiration of any Project time period established for the Project does not, by itself, constitute an expiration or termination of the Grant Agreement or Cooperative Agreement for the Project. (2 CFR § 200.340–343).

1. **Termination for Convenience (General Provision)**

   The PVTA may terminate this contract, in whole or in part, at any time by written notice to the Contractor when it is in the Government's best interest. The Contractor shall be paid its costs, including contract close-out costs, and profit on work performed up to the time of termination. The Contractor shall promptly submit its termination claim to PVTA to be paid the Contractor. If the Contractor had any property in its possession belonging to the PVTA, the Contractor will account for the same and dispose of it in the manner the PVTA directs.

2. **Termination for Default [Breach or Cause] (General Provision)**

   If the Contractor does not deliver supplies in accordance with the contract delivery schedule, or, if the contract is for services, the Contractor fails to perform in the manner called for in the contract, or if the Contractor fails to comply with any other provisions of the contract, the PVTA may terminate this contract for default. Termination shall be effected by serving a notice of termination on the Contractor setting the manner in which the Contractor is in default. The Contractor will only be paid the contract price for supplies delivered and accepted, or services performed in accordance with the manner of performance set forth in the contract.

   If it is later determined by the PVTA that the Contractor had an excusable reason for not performing, such as a strike, fire, or flood, events which are not the fault of or are beyond the control of the Contractor, the PVTA, after setting up a new delivery performance schedule, may allow the Contractor to continue work, or treat the termination as a termination for convenience.

3. **Opportunity to Cure (General Provision)**

   The PVTA in its sole discretion may, in the case of a termination for breach or default, allow the Contractor [an appropriately short period of time] in which to cure the defect. In such case, the notice of termination will state the time period in which cure is permitted and other appropriate conditions.

   If Contractor fails to remedy to PVTA 's satisfaction the breach or default or any of the

terms, covenants, or conditions of this contract within [ten (10) days] after receipt by Contractor of written notice from the PVTA setting forth the nature of said breach or default, PVTA shall have the right to terminate the contract without any further obligation to Contractor. Any such termination for default shall not in any way operate to preclude PVTA from also pursuing all available remedies against Contractor and its sureties for said breach or default.

4. Waiver of Remedies for any Breach

In the event that PVTA elects to waive its remedies for any breach by Contractor of any covenant, term or condition of this Contract, such waiver by PVTA shall not limit PVTA's remedies for any succeeding breach of that or of any other term, covenant, or condition of this Contract.

5. Termination for Default (Construction)

If the Contractor refuses or fails to prosecute the work or any separable part, with diligence that will ensure its completion within the time specified in this contract or any extension or fails to complete the work within this time, or if the Contractor fails to comply with any other provisions of this contract, the PVTA may terminate this contract for default. The PVTA shall terminate by delivering to the Contractor a Notice of Termination specifying the nature of the default. The PVTA may take over the work and complete it by contract or otherwise, and may take possession of and use any materials, appliances, and plant on the work site necessary for completing the work. The Contractor and its sureties shall be liable for any damage to the Recipient resulting from the Contractor's refusal or failure to; complete the work within specified time, whether or not the Contractor's right to proceed with the work is terminated. This liability includes any increased costs incurred by the PVTA in completing the work.

The Contractor's right to proceed shall not be terminated nor the Contractor charged with damages under this clause if-

1. the delay in completing the work arises from unforeseeable causes beyond the control and without the fault or negligence of the Contractor. Examples of such causes include, acts of God, acts of PVTA, acts of another Contractor in the performance of a contract with the PVTA, epidemics, quarantine restrictions, strikes, freight embargoes; and

2. the Contractor within [10] days from the beginning of any delay, notifies the PVTA in writing of the causes of delay. If in the judgment of the PVTA, the delay is excusable, the time for completing the work shall be extended. The judgment of the PVTA shall be final and conclusive on the parties, but subject to appeal under the Disputes clauses.

If, after termination of the Contractor's right to proceed, it is determined that the Contractor was not in default, or that the delay was excusable, the rights and obligations of the parties will be the same as if the termination had been issued for the convenience of the PVTA.

Civil Rights

The Contractor agrees to comply with all applicable civil rights laws, regulations and directives, except to the extent that the Federal Government determines otherwise in writing. These include, but are not limited to, the following:

a. Nondiscrimination in Federal Public Transportation Programs. The Contractor agrees to comply, and assures the compliance of each subcontractor, lessee, or third party contractor at any tier of the Project, with the provisions of 49 U.S.C. § 5332, which prohibit discrimination on the basis of race, color, creed, national origin, sex, or age, and prohibits discrimination in employment or business opportunity.
b. Nondiscrimination Title VI of the Civil Rights Act. The Contractor agrees to comply, and assures the compliance of each subcontractor, lessee, or third party contractor at any tier of the Project, with all provisions prohibiting discrimination on the basis of race, color, or national origin of Title VI of the Civil Rights Act of 1964, as amended, 42 U.S.C. §§ 2000d et seq., and with U.S. DOT regulations, "Nondiscrimination in Federally-Assisted Programs of the Department of Transportation Effectuation of Title VI of the Civil Rights Act," 49 C.F.R. Part 21. Except to the extent FTA determines otherwise in writing, the Contractor also agrees to comply with all applicable provisions of FTA Circular 4702.1B, Title VI Requirements and Guidelines for Federal Transit Administration Recipients (2012), any subsequent amendments, and any other applicable Federal directives that may be issued.
c. Equal Employment Opportunity. The Contractor agrees to comply, and assures the compliance of each subcontractor, lessee, or third party contractor at any tier of the Project, with all equal employment opportunity (EEO) provisions of 49 U.S.C. § 5332, with Title VII of the Civil Rights Act of 1964, as amended, 42 U.S.C. § 2000e, and implementing Federal regulations and any subsequent amendments thereto. Except to the extent FTA determines otherwise in writing, the Contractor also agrees to comply with all applicable Federal EEO directives that may be issued. Accordingly:
(1) General. The Contractor agrees that it will not discriminate against any employee or applicant for employment because of race, color, creed, sex, disability, age, or national origin. The Contractor agrees to take affirmative action to ensure that applicants are employed and that employees are treated during employment without regard to their race, color, religion, sex, disability, age, or national origin. Such action shall include, but not be limited to, employment, upgrading, demotions or transfers, recruitment or recruitment advertising, layoffs or terminations; rates of pay or other forms of compensation; and selection for training, including apprenticeship.
(2) **Equal Employment Opportunity Requirements for Construction Activities**. For activities determined by the U.S. Department of Labor (U.S. DOL) to qualify as "construction," the Contractor agrees to comply and assures the compliance of each subcontractor, lessee, or third party contractor at any tier of the Project, with all applicable equal employment opportunity requirements of U.S. DOL regulations, "Office of Federal Contract Compliance Programs, Equal Employment Opportunity, Department of Labor," 41 C.F.R. Parts 60 et seq., which implement Executive Order No. 11246, "Equal Employment Opportunity," as amended by
Executive Order No. 11375, "Amending Executive Order No. 11246 Relating to Equal Employment Opportunity," 42 U.S.C. § 2000e note, and also with any Federal laws, regulations, and directives affecting construction undertaken as part of the Project (FTA Master Agreement v33 § 12).

Americans with Disabilities Act (ADA) Access

The Contractor agrees to comply with 49 U.S.C. § 5332, which states the Federal policy that elderly individuals and individuals with disabilities have the same right as other individuals to use public transportation services and facilities, and that special efforts shall be made in planning and designing those services and facilities to implement transportation accessibility rights for elderly individuals and individuals with disabilities. The Contractor also agrees to comply with all applicable provisions of section 504 of the Rehabilitation Act of 1973, as amended, with 29 U.S.C. § 794, which prohibits discrimination on the basis of disability; with the Americans with Disabilities Act of 1990 (ADA), as amended, 42 U.S.C. §§ 12101 et seq., which requires that accessible facilities and services be made available to individuals with disabilities; and with the Architectural Barriers Act of 1968, as amended, 42
U.S.C. §§ 4151 et seq., which requires that buildings and public accommodations be accessible to individuals with disabilities, and any subsequent amendments to these laws or other laws pertaining to access for individuals with disabilities to the extent applicable. In addition, the Contractor agrees to comply with applicable implementing Federal regulations and directives and any subsequent amendments thereto, as follows:

(1) U.S. DOT regulations, "Transportation Services for Individuals with Disabilities (ADA)," 49 C.F.R. Part 37;

(2) U.S. DOT regulations, "Nondiscrimination on the Basis of Handicap in Programs and Activities Receiving or Benefiting from Federal Financial Assistance," 49 C.F.R. Part 27;

(3) Joint U.S. Architectural and Transportation Barriers Compliance Board (U.S. ATBCB)/U.S. DOT regulations, "Americans With Disabilities (ADA) Accessibility Specifications for Transportation Vehicles," 36 C.F.R. Part 1192 and 49 C.F.R. Part 38;

(4) U.S. DOJ regulations, "Nondiscrimination on the Basis of Disability in State and Local Government Services," 28 C.F.R. Part 35;

(5) U.S. DOJ regulations, "Nondiscrimination on the Basis of Disability by Public Accommodations and in Commercial Facilities," 28 C.F.R. Part 36;

(6) U.S. General Services Administration (U.S. GSA) regulations, "Accommodations for the Physically Handicapped," 41 C.F.R. Subpart 101-19;

(7) U.S. EEOC, "Regulations to Implement the Equal Employment Provisions of the Americans with Disabilities Act," 29 C.F.R. Part 1630;

(8) U.S. Federal Communications Commission regulations, "Telecommunications Relay Services and Related Customer Premises Equipment for the Hearing and Speech Disabled," 47 C.F.R. Part 64, Subpart F;

(9) U.S. ATBCB regulations, "Electronic and Information Technology Accessibility Standards," 36 C.F.R. Part 1194;

(10) FTA regulations, "Transportation for Elderly and Handicapped Persons," 49 C.F.R. Part 609; and

(11) Federal civil rights and nondiscrimination directives implementing the foregoing regulations, except to the extent the Federal Government determines otherwise in writing.

Disadvantaged Business Enterprise (DBE)

It is the policy of the PVTA and the United States Department of Transportation (“DOT”) that Disadvantaged Business Enterprises (“DBEs”), as defined herein and in the Federal regulations

published at 49 C.F.R. part 26, shall have an equal opportunity to participate in DOT-assisted contracts. It is also the policy of the PVTA to:

1. Ensure nondiscrimination in the award and administration of DOT-assisted contracts;
2. Create a level playing field on which DBE's can compete fairly for DOT-assisted contracts.
3. Ensure that the DBE program is narrowly tailored in accordance with applicable law;
4. Ensure that only firms that fully meet 49 C.F.R. part 26 eligibility standards are permitted to participate as DBEs;
5. Help remove barriers to the participation of DBEs in DOT assisted contracts;
6. To promote the use of DBEs in all types of federally assisted contracts and procurement activities; and
7. Assist in the development of firms that can compete successfully in the marketplace outside the DBE program.

This Contract is subject to 49 C.F.R. part 26. Therefore, the Contractor must satisfy the requirements for DBE participation as set forth herein. These requirements are in addition to all other equal opportunity employment requirements of this Contract. The PVTA shall make all determinations with regard to whether or not a Bidder/Offeror is in compliance with the requirements stated herein. In assessing compliance, the PVTA may consider during its review of the Bidder/Offeror's submission package, the Bidder/Offeror's documented history of non-compliance with DBE requirements on previous contracts with the PVTA.

Contract Assurance

The Contractor, subrecipient or subcontractor shall not discriminate on the basis of race, color, national origin, or sex in the performance of this Contract. The Contractor shall carry out applicable requirements of 49 C.F.R. part 26 in the award and administration of DOT-assisted contracts. Failure by the Contractor to carry out these requirements is a material breach of this Contract, which may result in the termination of this Contract or such other remedy as the PVTA deems appropriate.

DBE Participation

For the purpose of this Contract, the PVTA will accept only DBEs who are:

1. Certified, at the time of bid opening or proposal evaluation, by the [certifying agency or the Unified Certification Program (UCP)]; or
2. An out-of-state firm who has been certified by either a local government, state government or Federal government entity authorized to certify DBE status or an agency whose DBE certification process has received FTA approval; or
3. Certified by another agency approved by the PVTA.

NOTE: Pursuant to the U.S. Department of Transportation's Interim Final Rule effective October 3, 2025, DBE contract goals are temporarily suspended and no DBE percentage goal is established for this solicitation or contract during the current reevaluation period. Until the UCP completes recertification of DBE firms, DBE participation shall not be counted toward contract or overall program goals.

DBE Participation Goal

The DBE participation goal for this Contract is set at _0_ %. This goal represents those elements of work under this Contract performed by qualified Disadvantaged Business Enterprises for amounts totaling not less than _0_ % of the total Contract price. Failure to meet the stated goal at the time of proposal submission may render the Bidder/Offeror non-responsive.

Proposed Submission

Each Bidder/Offeror, **at this time, is not required to supply** the following information:

1. A completed DBE Utilization Form (see DBE Utilization Form) that indicates the percentage and dollar value of the total bid/contract amount to be supplied by Disadvantaged Business Enterprises under this Contract.
2. A list of those qualified DBE's with whom the Bidder/Offeror intends to contract for the performance of portions of the work under the Contract, the agreed price to be paid to each DBE for work, the Contract items or parts to be performed by each DBE, a proposed timetable for the performance or delivery of the Contract item, and other information as required by the DBE Participation Schedule (see DBE Participation Schedule). No work shall be included in the Schedule that the Bidder/Offeror has reason to believe the listed DBE will subcontract, at any tier, to other than another DBE. If awarded the Contract, the Bidder/Offeror may not deviate from the DBE Participation Schedule submitted in response to the bid. Any subsequent changes and/or substitutions of DBE firms will require review and written approval by the PVTA.
3. An original DBE Letter of Intent (see DBE Letter of Intent) from each DBE listed in the DBE Participation Schedule.
4. An original DBE Affidavit (see DBE Affidavit) from each DBE stating that there has not been any change in its status since the date of its last certification.

Good Faith Efforts

If the Bidder/Offeror is unable to meet the goal set forth above (DBE Participation Goal), the PVTA will consider the Bidder/Offeror's documented good faith efforts to meet the goal in determining responsiveness. The types of actions that the PVTA will consider as part of the Bidder/Offeror's good faith efforts include, but are not limited to, the following:

1. Documented communication with the PVTA's DBE Coordinator (questions of IFB or RFP requirements, subcontracting opportunities, appropriate certification, will be addressed in a timely fashion);
2. Pre-bid meeting attendance. At the pre-bid meeting, the PVTA generally informs potential Bidder/Offeror's of DBE subcontracting opportunities;
3. The Bidder/Offeror's own solicitations to obtain DBE involvement in general circulation media, trade association publication, minority-focus media and other reasonable and available means within sufficient time to allow DBEs to respond to the solicitation;
4. Written notification to DBE's encouraging participation in the proposed Contract; and
5. Efforts made to identify specific portions of the work that might be performed by DBE's.

The Bidder/Offeror shall provide the following details, at a minimum, of the specific efforts it made to negotiate in good faith with DBEs for elements of the Contract:

1. The names, addresses, and telephone numbers of DBE's that were contacted;
2. A description of the information provided to targeted DBEs regarding the specifications and bid proposals for portions of the work;
3. Efforts made to assist DBEs contacted in obtaining bonding or insurance required by the Bidder or the Authority.

Further, the documentation of good faith efforts must include copies of each DBE and non-DBE subcontractor quote submitted when a non-DBE subcontractor was selected over a DBE for work on the contract. 49 C.F.R. § 26.53(b) (2) (VI). In determining whether a Bidder has made good faith efforts, the Authority may take into account the performance of other Bidders in meeting the Contract goals. For example, if the apparent successful Bidder failed to meet the goal, but meets or exceeds the average DBE participation obtained by other Bidders, the Authority may view this as evidence of the Bidder having made good faith efforts.

Administrative Reconsideration

Within five (5) business days of being informed by the PVTA that it is not responsive or responsible because it has not documented sufficient good faith efforts, the Bidder/Offeror may request administrative reconsideration. The Bidder should make this request in writing to the PVTA DBE Liaison. The DBE Liaison will forward the Bidder/Offeror's request to a reconsideration official who will not have played any role in the original determination that the Bidder/Offeror did not document sufficient good faith efforts. As part of this reconsideration, the Bidder/Offeror will have the opportunity to provide written documentation or argument concerning the issue of whether it met the goal or made adequate good faith efforts to do so. The Bidder/Offeror will have the opportunity to meet in person with the assigned reconsideration official to discuss the issue of whether it met the goal or made adequate good faith efforts to do so. The PVTA will send the Bidder/Offeror a written decision on its reconsideration, explaining the basis for finding that the Bidder/Offeror did or did not meet the goal or make adequate good faith efforts to do so. The result of the reconsideration process is not administratively appealable to the Department of Transportation.

Termination of DBE Subcontractor

The Contractor shall not terminate the DBE subcontractor(s) listed in the DBE Participation Schedule (see DBE Participation Schedule) without the PVTA's prior written consent. The PVTA may provide such written consent only if the Contractor has good cause to terminate the DBE firm. Before transmitting a request to terminate, the Contractor shall give notice in writing to the DBE subcontractor of its intent to terminate and the reason for the request. The Contractor shall give the DBE five days to respond to the notice and advise of the reasons why it objects to the proposed termination. When a DBE subcontractor is terminated or fails to complete its work on the Contract for any reason, the Contractor shall make good faith efforts to find another DBE subcontractor to substitute for the original DBE and immediately notify the PVTA in writing of its efforts to replace the original DBE. These good faith efforts shall be directed at finding another DBE to perform at least the same amount of work under the Contract as the DBE that was terminated, to the extent needed to meet the Contract goal established for this procurement. Failure to comply with these requirements will be in accordance with the Sanctions for Violations Section below.

Continued Compliance

The PVTA shall monitor the Contractor's DBE compliance during the life of the Contract. In the event this procurement exceeds ninety (90) days, it will be the responsibility of the Contractor to submit quarterly written reports to the PVTA that summarize the total DBE value for this Contract. These reports shall provide the following details:

- DBE utilization established for the Contract;
- Total value of expenditures with DBE firms for the quarter;
- The value of expenditures with each DBE firm for the quarter by race and gender;
- Total value of expenditures with DBE firms from inception of the Contract; and
- The value of expenditures with each DBE firm from the inception of the Contract by race and gender.

Reports and other correspondence must be submitted to the DBE Liason with copies provided to the PVTA. Reports shall continue to be submitted quarterly until final payment is issued or until DBE participation is completed.

The successful Bidder/Offeror shall permit:

1. The PVTA to have access to necessary records to examine information as the PVTA deems appropriate for the purpose of investigating and determining compliance with this provision,

including, but not limited to, records of expenditures, invoices, and contract between the successful Bidder/Offeror and other DBE parties entered into during the life of the Contract.
2. The authorized representative(s) of the PVTA, the U.S. Department of Transportation, the Comptroller General of the United States, to inspect and audit all data and record of the Contractor relating to its performance under the Disadvantaged Business Enterprise Participation provision of this Contract.
3. All data/record(s) pertaining to DBE shall be maintained as stated in the Continued Compliance Section.

NOTE: Notwithstanding any DBE participation commitments made prior to October 3, 2025, no DBE participation shall be credited toward contract goals or overall program goals during the DBE recertification period. The contractor must continue to comply with applicable subcontractor substitution and "good cause" requirements under federal and local law.

Sanctions for Violations

If at any time the PVTA has reason to believe that the Contractor is in violation of its obligations under this Agreement or has otherwise failed to comply with terms of this Section, the PVTA may, in addition to pursuing any other available legal remedy, commence proceedings, which may include but are not limited to, the following:

1. Suspension of any payment or part due the Contractor until such time as the issues concerning the Contractor's compliance are resolved; and
2. Termination or cancellation of the Contract, in whole or in part, unless the successful Contractor is able to demonstrate within a reasonable time that it is in compliance with the DBE terms stated herein.

Prompt Payment to Subcontractors

The Contractor is required to pay its subcontractors performing work related to this contract for satisfactory performance of that work no later than 10 days after the Contractor's receipt of payment for that work. In addition, the Contractor is required to return any retainage payments to those subcontractors within 30 days after the subcontractor's work related to this contract is satisfactorily completed.

The Contractor must promptly notify the Agency, whenever a DBE subcontractor performing work related to this contract is terminated or fails to complete its work and must make good faith efforts to engage another DBE subcontractor to perform at least the same amount of work. The Contractor may not terminate any DBE subcontractor and perform that work through its own forces or those of an affiliate without prior written consent of the Agency. (49 CFR § 26.29).

Incorporation of Federal Transit Administration (FTA) Terms

The Contractor agrees to comply with applicable third party procurement requirements of 49 U.S.C. chapter 53 and other procurement requirements of Federal laws in effect now or as subsequently enacted to the extent applicable; with applicable U.S. DOT third party procurement regulations subject to FTA Master Agreement v33 and the requirements of 2 CFR Part 200, and with other applicable Federal regulations pertaining to third party procurements and subsequent amendments thereto. The Contractor also agrees to comply with the provisions of FTA Circular 4220.1G, "Third Party Contracting Requirements," and with any subsequent revision to that circular, except to the extent FTA determines otherwise in writing. Although the FTA "Best Practices Procurement

Manual" provides additional procurement guidance, the Contractor understands that the FTA "Best Practices Procurement Manual" is focused on third party procurement processes and may omit certain Federal requirements applicable to specific third party contract work to be performed.

Debarment and Suspension

The Contractor shall comply and facilitate compliance with U.S. DOT regulations, "Nonprocurement Suspension and Debarment," 2 C.F.R. part 1200, which adopts and supplements the U.S. Office of Management and Budget (U.S. OMB) "Guidelines to Agencies on Government wide Debarment and Suspension (Nonprocurement)," 2 C.F.R. part 180. These provisions apply to each contract at any tier of $25,000 or more, and to each contract at any tier for a federally required audit (irrespective of the contract amount), and to each contract at any tier that must be approved by an FTA official irrespective of the contract amount. As such, the Contractor shall verify that its principals, affiliates, and subcontractors are eligible to participate in this federally funded contract and are not presently declared by any Federal department or agency to be:

a) Debarred from participation in any federally assisted Award;
b) Suspended from participation in any federally assisted Award;
c) Proposed for debarment from participation in any federally assisted Award;
d) Declared ineligible to participate in any federally assisted Award;
e) Voluntarily excluded from participation in any federally assisted Award; or
f) Disqualified from participation in ay federally assisted Award.

By signing and submitting its bid or proposal, the bidder or proposer certifies as follows:
The certification in this solicitation (see attached Certification of Eligibility) is a material representation of fact relied upon by the PVTA. If it is later determined by the PVTA that the bidder or proposer knowingly rendered an erroneous certification, in addition to remedies available to the PVTA, the Federal Government may pursue available remedies, including but not limited to suspension and/or debarment. The bidder or proposer agrees to comply with the requirements of 2 C.F.R. part 180, subpart C, as supplemented by 2 C.F.R. part 1200, while this offer is valid and throughout the period of any contract that may arise from this offer. The bidder or proposer further agrees to include a provision requiring such compliance in its lower tier covered transactions.

Buy America

Compliance with Buy America Requirements: The Contractor shall comply with the requirements of 49 U.S.C. § 5323(j) and 49 CFR Part 661 to the extent consistent with 49 U.S.C. § 5323(j), including the requirements for rolling stock, construction materials, and associated components, as applicable, to the extent that the Agreement is funded with Federal assistance from the Federal Transit Administration (FTA).
Certification: The Contractor shall submit the appropriate Buy America certification, as required by the FTA, prior to the delivery of materials or equipment. By submitting such certification, the Contractor affirms that all steel, iron, and manufactured products used in the project meet the Buy America requirements. Separate requirements for rolling stock are set out at 49 U.S.C. 5323(j)(2)(C), 49 U.S.C. § 5323(u) and 49 C.F.R. § 661.11.

Noncompliance and Waivers: If the Contractor cannot fully comply with Buy America requirements, the Contractor must obtain a waiver from the FTA before using noncompliant materials or equipment. Any use of noncompliant products without an approved waiver shall constitute a breach of this Agreement. General waivers are listed in 49 C.F.R. § 661.7.
Flow-Down Requirement: The Contractor shall include this Buy America clause in all lower-tier subcontracts or purchase agreements related to the project funded under this Agreement.
Remedies: Failure to comply with the Buy America requirements may result in remedies including, but not limited to, withholding of payments, recovery of funds, and termination of the Agreement, as permitted under applicable law and FTA guidance (FTA Master Agreement v33 § 15(a)).

Domestic Preference for Procurements "Build America, Buy America"

As appropriate and to the extent consistent with law, the Contractor shall comply with all applicable domestic preference requirements under the Build America, Buy America Act (BABA), Pub. L. 117-58, div. G, tit. IX, §§ 70911-70927 (2021), codified at 2 CFR Part 184 and implemented through 2 CFR Part 200 through a preference for the purchase, acquisition, or use of goods, products, or materials produced in the United States.
For purposes of this clause:
"Produced in the United States" means iron, steel, manufactured products, or construction materials that are manufactured in the United States or substantially all of the components are of U.S. origin, consistent with 2 CFR Part 184.
"Construction materials" include non-ferrous metals, plastic and polymer-based products, glass, lumber, and drywall.
The Contractor must comply with 2 CFR § 200.322, 2 CFR Part 184, and must flow down this requirement to all subcontractors.
This domestic preference is separate from, and in addition to, FTA's Buy America requirements under 49 U.S.C. § 5323(j) and 49 CFR Part 661, which remain applicable where triggered (FTA Master Agreement v33 § 15(b)).

Further information for bidders on domestic preference:
Required Use of American Iron, Steel, Manufactured Products, and Construction Materials
Recipients of an award of Federal financial assistance from a program for infrastructure are hereby notified that none of the funds provided under this award may be used for a project for infrastructure unless:

a. All iron and steel used in the project are produced in the United States. This means all manufacturing processes, from the initial melting stage through the application of coatings, occurred in the United States.
b. All manufactured products used in the project are produced in the United States. This means the manufactured product was manufactured in the United States, and the cost of the components of the manufactured product that are mined, produced, or manufactured in the United States is greater than 55 percent of the total cost of all components of the manufactured product, unless another standard for determining the minimum amount of domestic content of the manufactured product has been established under applicable law or regulation.

c. All construction materials are manufactured in the United States. This means that all manufacturing processes for the construction material occurred in the United States.

The Buy America preference only applies to articles, materials, and supplies that are consumed in, incorporated into, or affixed to an infrastructure project. As such, it does not apply to tools, equipment, and supplies, such as temporary scaffolding, brought to the construction site and removed at or before the completion of the infrastructure project. Nor does a Buy America preference apply to equipment and furnishings, such as movable chairs, desks, and portable computer equipment, that are used at or within the finished infrastructure project but are not an integral part of the structure or permanently affixed to the infrastructure project.

Waivers

When necessary, PVTA may apply to FTA for a waiver from these requirements. Requests for a waiver may only be granted under the following circumstances:

a. applying the domestic content procurement preference would be inconsistent with the public interest;
b. the types of iron, steel, manufactured products, or construction materials are not produced in the United States in sufficient and reasonably available quantities or of a satisfactory quality; or
c. the inclusion of iron, steel, manufactured products, or construction materials produced in the United States will increase the cost of the overall project by more than 25 percent.

A request to waive the application of the domestic content procurement preference must be in writing. PVTA will provide instructions on the format, contents, and supporting materials required for any waiver request. Waiver requests are subject to public comment periods of no less than 15 days and must be reviewed by the Made in America Office. There may be instances where an award qualifies, in whole or in part, for an existing waiver described at:
https://www.transit.dot.gov/regulations-and-guidance/buy-america/waivers-granted.

Definitions

"Construction materials" include articles, materials, or supplies that consist of the items listed below. Minor additions of articles, materials, supplies, or binding agents to a construction material do not change the categorization of the construction material.

- non-ferrous metals;
- plastic and polymer-based products (including polyvinylchloride, composite building materials, and polymers used in fiber optic cables);
- glass (including optic glass);
- fiber optic cable (including drop cable)
- optical fiber
- lumber
- engineered wood, or
- drywall.

"Domestic content procurement preference'' means all iron and steel used in the project are produced in the United States; the manufactured products used in the project are produced in the United States; or the construction materials used in the project are produced in the United States.

"Infrastructure" includes, at a minimum, the structures, facilities, and equipment for, in the United States, roads, highways, and bridges; public transportation; dams, ports, harbors, and other maritime facilities; intercity passenger and freight railroads; freight and intermodal facilities; airports; water systems, including drinking water and wastewater systems; electrical transmission facilities and

systems; utilities; broadband infrastructure; and buildings and real property. Infrastructure includes facilities that generate, transport, and distribute energy.
‘‘Project’’ means the construction, alteration, maintenance, or repair of infrastructure in the United States.
“Section 70917(c) materials” means cement and cementitious materials; aggregates such as stone, sand, or gravel; or aggregate binding agents or additives. See Section 70917(c) of the Build America, Buy America Act.

Notification of Fraud, Waste, Abuse and Disputes, Breaches, Litigation

The Contractor acknowledges:

(a) FTA Interest. FTA has a vested interest in the settlement of any violation of federal law, regulation, or requirement, or any disagreement involving the Award, the accompanying Underlying Agreement, and any Amendments thereto including, but not limited to, a default, breach, major dispute, or litigation, and FTA reserves the right to concur in any settlement or compromise.

(b) Notification to FTA; Flow Down Requirement. If a current or prospective legal matter that may affect the Federal Government emerges, the PVTA shall promptly notify, in writing, the FTA Chief Counsel and FTA Regional Counsel for the Region in which the PVTA is located. The Contractor must include an equivalent provision in its subagreements at every tier, for any agreement that is a “covered transaction” according to 2 C.F.R. §§ 180.220 and 1200.220.

(1) The types of legal matters that require notification include, but are not limited to, a major dispute, breach, default, litigation, or naming the Federal Government as a party to litigation or a legal disagreement in any forum for any reason.

(2) Matters that may affect the Federal Government include, but are not limited to, the Federal Government’s interests in the Award, the accompanying Underlying Agreement, and any Amendments thereto, or the Federal Government’s administration or enforcement of federal laws, regulations, and requirements.

(3) **Additional Notice to U.S. DOT Inspector General.** The PVTA must promptly notify the U.S. DOT Inspector General in addition to the FTA Chief Counsel or Regional Counsel for the Region in which the PVTA is located, if the PVTA has knowledge of potential fraud, waste, or abuse occurring on a Project receiving assistance from FTA. The notification provision applies if a person has or may have submitted a false claim under the False Claims Act, 31 U.S.C. § 3729, et seq., or has or may have committed a criminal or civil violation of law pertaining to such matters as fraud, conflict of interest, bid rigging, misappropriation or embezzlement, bribery, gratuity, or similar misconduct involving federal assistance. This responsibility occurs whether the Project is subject to this Agreement or another agreement between the PVTA and FTA, or an agreement involving a principal, officer, employee, agent, or Third Party Participant (Contractor) of the PVTA. It also applies to subcontractors at any tier; a contractor must include an equivalent provision in its subagreements. Knowledge, as used in this paragraph, includes, but is not limited to, knowledge of a criminal or civil investigation by a Federal, state, or local law enforcement or other investigative agency, a criminal indictment or civil complaint, or probable cause that could

support a criminal indictment, or any other credible information in the possession of the PVTA. In this paragraph, "promptly" means to refer information without delay and without change. This notification provision applies to all divisions of the PVTA, including divisions tasked with law enforcement or investigatory functions (FTA Master Agreement v33 § 39(b)(3)).

(c) Federal Interest in Recovery. The Federal Government retains the right to a proportionate share of any proceeds recovered from any third party (Contractor), based on the percentage of the federal share for the Underlying Agreement. Notwithstanding the preceding sentence, the PVTA may return all liquidated damages it receives to its Award Budget for its Underlying Agreement rather than return the federal share of those liquidated damages to the Federal Government, provided that the PVTA receives FTA's prior written concurrence.

(d) Enforcement. The PVTA must pursue its legal rights and remedies available under any third party agreement or any federal, state, or local law or regulation. FTA reserves the right to concur in any compromise or settlement of any claim involving the Project. FTA encourages the use of alternative dispute resolution procedures, as may be appropriate (FTA Master Agreement v33 § 39).

Lobbying Restrictions

In accordance with the Byrd Anti-Lobbying Amendment, 31 U.S.C. §1352, as amended, and applicable federal requirements, the Contractor certifies and agrees as follows:

1. Certification: The Contractor certifies, to the best of its knowledge and belief, that no federal funds provided under this Agreement have been or will be used to pay any person to influence, or attempt to influence, an officer or employee of any federal agency, a Member of Congress, an officer or employee of Congress, or an employee of a Member of Congress in connection with the awarding of any federal contract, grant, cooperative agreement, or loan. In addition, the Contractor will comply with other applicable Federal laws and regulations prohibiting the use of Federal assistance for activities, designed to influence Congress or a State legislature with respect to legislation or appropriations, except through proper, official channels; and he Contractor will comply, and will assure the compliance of each subcontractor, lessee, or third party contractor at any tier, with U.S. DOT regulations, "New Restrictions on Lobbying," 49 C.F.R. Part 20, modified as necessary by 31 U.S.C. § 1352.
2. Disclosure of Lobbying: The Contractor shall disclose any lobbying activities as required by 31 U.S.C. §1352 and 2 CFR 200.450, including the filing of Standard Form-LLL ("Disclosure of Lobbying Activities") if any funds other than federal funds have been used for lobbying.
3. Flow-Down Requirement: The Contractor shall require all lower-tier subcontractors and participants to comply with this clause and include a certification or disclosure consistent with this provision.
4. Consequences of Noncompliance: Any violation of this clause shall be treated as a material breach of this Agreement and may result in remedies including, but not limited to, suspension, termination, withholding of payments, or other actions as permitted under law or this Agreement (FTA Master Agreement v33 § 4(c)).

Energy Conservation

The Contractor shall comply with mandatory energy efficiency standards and policies derived from the State Energy Conservation Plan under the Energy Policy and Conservation Act, as amended (42 U.S.C. § 6321 et seq.), and perform an energy assessment for any building constructed, reconstructed, or modified with federal assistance required under FTA regulations, "Requirements for Energy Assessments," 49 CFR Part 622, subpart C, and comply with any applicable state or local energy policies. This obligation extends to all subcontractors (FTA Master Agreement v33 § 26(i)).

Remedies for Breach of Contract

In accordance with 2 CFR 200 Appendix II (A), the Contractor agrees that:

1. Agency Remedies: If the Contractor fails to perform any obligation under this Agreement or violates any provision of this Agreement, the Agency may exercise any or all remedies available under law or equity, including but not limited to:
    - Withholding payment;
    - Termination of the Agreement, in whole or in part, for cause;
    - Recovery of damages or overpayments;
    - Suspension or debarment from future federally funded contracts; and
    - Any other remedies provided under applicable law or the terms of this Agreement.
2. Non-Exclusive Remedies: The remedies provided in this clause are cumulative and in addition to any other remedies available at law or equity. The exercise of one remedy does not preclude the exercise of any other remedy.
3. Flow-Down Requirement: The Contractor shall include a provision with substantially the same effect in all subcontracts and agreements funded under this Agreement.
4. Material Breach: Any breach of this Agreement by the Contractor shall be deemed material and may result in enforcement of the remedies listed above.

Recovered Materials and Solid Wastes

The Contractor agrees to comply with all applicable requirements of Section 6002 of the Solid Waste Disposal Act, as amended by the Resource Conservation and Recovery Act (42 U.S.C. § 6962) and U.S. Environmental Protection Agency (EPA) regulations at 40 CFR Part 247. In the performance of this contract, the Contractor shall procure only items designated in guidelines of the Environmental Protection Agency (EPA) (40 CFR Part 247) that contain the highest percentage of recovered materials practicable, consistent with maintaining a satisfactory level of competition, where the purchase price of the item exceeds $10,000 or the value of the quantity acquired during the preceding fiscal year exceeded $10,000; procuring solid waste management services in a manner that maximizes energy and resource recovery; and establishing an affirmative procurement program for procurement of recovered materials identified in the EPA guidelines. The Contractor also agrees to provide reasonable estimates, certifications, and other documentation to demonstrate compliance upon request of the Recipient, FTA, or EPA. This requirement flows down to all subcontractors and subawards (FTA Master Agreement v33 § 16(d)(9)).

Safe Operation of Motor Vehicles

1) Seat Belt Use: In implementation of Executive Order No. 13043, "Increasing Seat Belt Use in the United States," April 16, 1997, 23 U.S.C. § 402 note, (62 Fed. Reg. 19217) PVTA has adopted and promotes on-the-job seat belt use policies and programs for its employees and other personnel that operate company-owned vehicles, company- rented vehicles, or personally operated vehicles. The terms "company-owned" and "company- leased" refer to vehicles owned or leased either by the Contractor or PVTA.
    a. The third party (Contractor) shall adopt and promote on-the-job seat belt use policies and programs for its employees and other personnel that operate company-owned vehicles, company- rented vehicles, or personally operated vehicles and shall require all employees and subcontracted employees to use seat belts while on PVTA property and in connection to all PVTA projects, including but not limited to: driving to the job site, leaving the job site, picking up/delivering materials, and disposing of waste.
2) Distracted Driving, Including Text Messaging While Driving: The PVTA complies with Executive Order No. 13513, "Federal Leadership on Reducing Text Messaging While Driving," October 1, 2009, 23 U.S.C. § 402 note, (74 Fed. Reg. 51225); (2) U.S. DOT Order 3902.10, "Text Messaging While Driving," December 30, 2009; and (3) The following U.S. DOT Special Provision pertaining to Distracted Driving:
    (i) Safety. The PVTA adopts workplace safety policies to decrease crashes caused by distracted drivers, including policies to ban text messaging while using an electronic device supplied by an employer, and driving a vehicle the driver owns or rents, a vehicle owns, leases, or rents, or a privately-owned vehicle when on official business in connection with the Award, or when performing any work for or on behalf of the Award.
    (ii) Recipient Size. The PVTA agrees to conduct workplace safety initiatives in a manner commensurate with its size, such as establishing new rules and programs to prohibit text messaging while driving, re-evaluating the existing programs to prohibit text messaging while driving, and providing education, awareness, and other outreach to employees about the safety risks associated with texting while driving.

    The third party (Contractor) shall comply with the preceding Special Provision (i) – (ii) to adopt and enforce workplace safety policies to decrease crashes caused by distracted drivers, including policies to ban text messaging while using an electronic device supplied by an employer, and driving a vehicle the driver owns or rents, a vehicle Contactor owns, leases, or rents, or a privately-owned vehicle when on official business in connection with the work performed under this agreement; and to conduct workplace safety initiatives in a manner commensurate with its size, such as establishing new rules and programs to prohibit text messaging while driving, re-evaluating the existing programs to prohibit text messaging while driving, and providing education, awareness, and other outreach to employees about the safety risks associated with texting while driving. The third party (Contractor) shall include this Special Provision in each subagreement at each tier (FTA Master Agreement v33 § 34).

Prohibition on Covered Telecommunications and Video Surveillance Services or Equipment

In accordance with 2 CFR 200.216, 2 CFR 200.471, and applicable federal law and guidance, the Contractor certifies and agrees as follows:
Prohibition: The Contractor shall not use, provide, or procure any covered telecommunications equipment or services, or any video surveillance equipment or services, from entities identified by the U.S. government as prohibited under federal law for use in federally funded contracts. This includes, but is not limited to, equipment or services produced by Huawei, ZTE, Hytera, Hikvision, Dahua, or other entities specified by the Federal Acquisition Regulation (FAR) or other federal guidance.
Compliance and Flow-Down: The Contractor shall ensure compliance with this prohibition in all lower-tier subcontracts or agreements. The Contractor shall require subcontractors and vendors to certify that they do not provide prohibited covered telecommunications or video surveillance equipment or services.
Reporting and Mitigation: The Contractor shall promptly report to the Agency any use or discovery of prohibited equipment or services in connection with this Agreement and shall take immediate corrective action to remove or replace such equipment or services.
Breach: Any violation of this clause shall constitute a material breach of this Agreement and may result in suspension, termination, or other remedies available to the Agency under law or this Agreement.

Federal Tax Liability and Recent Felony Convictions

In accordance with FTA Master Agreement Version 33, Section 4(g) and DOT Order 4200.6, the Contractor certifies that:

1. Federal Tax Compliance: The Contractor does not have any unpaid Federal tax liability that has been assessed, for which all judicial and administrative remedies have been exhausted or have lapsed, and that is not being paid in a timely manner pursuant to an agreement with the authority responsible for collecting the tax liability.
2. Felony Convictions: The Contractor has not been convicted of a felony criminal violation under any Federal law within the preceding 24 months.

If the Contractor cannot certify to either of the above, PVTA shall refer the matter to FTA and shall not to enter into any Third Party Agreement without the Agency's written approval.
The Contractor shall require all lower-tier participants to include this certification in their agreements (FTA Master Agreement v33 § 4(g)).

Contract Work Hours and Safety Standards Act

For all contracts in excess of $100,000 that involve the employment of mechanics or laborers, the Contractor shall comply with the Contract Work Hours and Safety Standards Act (40 U.S.C. §§ 3701- 3708), as supplemented by the DOL regulations at 29 C.F.R. part 5. Under 40 U.S.C. § 3702 of the Act.
(1) Overtime requirements - No contractor or subcontractor contracting for any part of the contract work which may require or involve the employment of laborers or mechanics shall require or

permit any such laborer or mechanic in any workweek in which he or she is employed on such work to work in excess of 40 hours in such workweek unless such laborer or mechanic receives compensation at a rate not less than one and one-half times the basic rate of pay for all hours worked in excess of 40 hours in such workweek.
(2) Violation; liability for unpaid wages; liquidated damages - In the event of any violation of the clause set forth in para. (1) of this section, contractor and any subcontractor responsible therefore shall be liable for the unpaid wages. In addition, such contractor and subcontractor shall be liable for liquidated damages. Such liquidated damages shall be computed with respect to each individual laborer or mechanic, including watchmen and guards, employed in violation of the clause set forth in para. (1) of this section, in the sum of $10 for each calendar day on which such individual was required or permitted to work in excess of the standard workweek of 40 hours without payment of the overtime wages required by the clause set forth in paragraph (1) of this section.
(3) Withholding for unpaid wages and liquidated damages - the recipient shall upon its own action or upon written request of USDOL withhold or cause to be withheld, from any moneys payable on account of work performed by contractor or subcontractor under any such contract or any other Federal contract with the same prime contractor, or any other federally-assisted contract subject to the Contract Work Hours & Safety Standards Act, which is held by the same prime contractor, such sums as may be determined to be necessary to satisfy any liabilities of such contractor or subcontractor for unpaid wages and liquidated damages as provided in the clause set forth in paragraph (2) of this section.
(4) Subcontracts - Contractor or subcontractor shall insert in any subcontracts the clauses set forth in this section and also a clause requiring the subcontractors to include these clauses in any lower tier subcontracts. Prime contractor shall be responsible for compliance by any subcontractor or lower tier subcontractor with the clauses set forth in this section.

Clean Air and Clean Water Acts

For all contracts exceeding $150,000 the Contractor shall:
a. Comply with Clean Air Act (42 U.S.C. § 7401-7671q, 2 CFR Appendix II (G)) and Federal Water Pollution Control Act (33 U.S.C. § 1251-1388 as amended & 2 CFR 200 Appendix II (G)) requirements, including inspection, monitoring, reporting, and facility compliance.
b. Ensure that no work is performed at facilities listed on the EPA's Violation List, or notify the Agency if such a facility is intended for use.
c. Include this clause in all subcontracts.
Violations shall be reported to the Federal awarding agency and the Regional Office of the Environmental Protection Agency (EPA) (FTA Master Agreement v33 § 16(d)(6)).

Cargo Preference- Use of United States Flag Vessels

For all contracts involving ocean transportation of goods, materials, or commodities under FTA funding, the Contractor must comply with Cargo Preference under 46 U.S.C. § 55305 and 46 CFR Part 381.7. This requires use of U.S.-flag vessels when transporting at least 50% of cargo weight per voyage. At least 50 percent of any equipment, materials or commodities procured, contracted for or otherwise obtained with funds granted, guaranteed, loaned, or advanced by the U.S. Government under this agreement, and which may be transported by ocean vessel, shall be transported on privately owned United States-flag commercial vessels, if available. 46 U.S.C. §

55305, and U.S. Maritime Administration regulations, "Cargo Preference – U.S.- Flag Vessels," 46 CFR Part 381. Within 20 days following the date of loading for shipments originating within the United States or within 30 working days following the date of loading for shipments originating outside the United States, a legible copy of a rated, 'on-board' commercial ocean bill-of-lading in English for each shipment of cargo described in 46 CFR § 381.7(a)(1) shall be furnished to both the recipient (through the prime contractor in the case of subcontractor bills-of-lading) and to the Division of National Cargo, Office of Market Development, Maritime Administration, Washington, DC 20590. The Contractor must include this clause in all subcontracts involving ocean shipping (FTA Master Agreement v33 § 15(c)).

Fly America

The Contractor agrees to comply with the Fly America Act (49 U.S.C. § 40118) and U.S. DOT regulations at 41 CFR Part 301-10.131-301-10.143 by using U.S.-flag air carriers for international air transportation funded in part by FTA, unless service by a foreign carrier is a necessity as defined in the Act. If a foreign air carrier is used, the Contractor shall submit a certification or memorandum explaining why U.S.-flag service was unavailable or why it was necessary, and shall provide a certificate of compliance. These requirements must flow down to all subcontractors involved in international air travel (FTA Master Agreement v33 § 15(d)).

Veteran's Employment Preference

As provided in 49 U.S.C. § 5325(k), to the extent practicable, the Contractor agrees and assures it: (1) Will give a hiring preference to veterans, as defined in 5 U.S.C. § 2108, who have the skills and abilities required to perform construction work required under a third party contract in connection with a Capital Project supported with federal assistance appropriated or made available for 49 U.S.C. chapter 53; and (2) Will not give a preference to any veteran over any equally qualified applicant who is a member of any racial or ethnic minority, female, an individual with a disability, or a former employee (FTA Master Agreement v33 § 16(u)).

Contracts Involving Federal Privacy Act Requirement

The following requirements apply to the Contractor and its employees that administer any system of records on behalf of the Federal Government under any contract:

1. The Contractor agrees to comply with, and assures the compliance of its employees with, the information restrictions and other applicable requirements of the Privacy Act of 1974, 5 U.S.C. § 552a. Among other things, the Contractor agrees to obtain the express consent of the Federal Government before the Contractor or its employees operate a system of records on behalf of the Federal Government. The Contractor understands that the requirements of the Privacy Act, including the civil and criminal penalties for violation of that Act, apply to those individuals involved, and that failure to comply with the terms of the Privacy Act may result in termination of the underlying contract.
2. The Contractor also agrees to include these requirements in each subcontract to administer any system of records on behalf of the Federal Government financed in whole or in part with Federal assistance provided by FTA.

Davis-Bacon and Copeland Anti-Kickback Acts

(1) Minimum wages - (i) All laborers and mechanics employed or working upon the site of the work (or under the United States Housing Act of 1937 or under the Housing Act of 1949 in the construction or development of the project), will be paid unconditionally and not less often than once a week, and without subsequent deduction or rebate on any account (except such payroll deductions as are permitted by regulations issued by the Secretary of Labor under the Copeland Act (29 CFR part 3)), the full amount of wages and bona fide fringe benefits (or cash equivalents thereof) due at time of payment computed at rates not less than those contained in the wage determination of the Secretary of Labor which is attached hereto and made a part hereof, regardless of any contractual relationship which may be alleged to exist between the contractor and such laborers and mechanics. Contributions made or costs reasonably anticipated for bona fide fringe benefits under section 1(b)(2) of the Davis-Bacon Act on behalf of laborers or mechanics are considered wages paid to such laborers or mechanics, subject to the provisions of paragraph (1)(iv) of this section; also, regular contributions made or costs incurred for more than a weekly period (but not less often than quarterly) under plans, funds, or programs which cover the particular weekly period, are deemed to be constructively made or incurred during such weekly period. Such laborers and mechanics shall be paid the appropriate wage rate and fringe benefits on the wage determination for the classification of work actually performed, without regard to skill, except as provided in 29 CFR Part 5.5(a)(4). Laborers or mechanics performing work in more than one classification may be compensated at the rate specified for each classification for the time actually worked therein: Provided, That the employer's payroll records accurately set forth the time spent in each classification in which work is performed. The wage determination (including any additional classifications and wage rates conformed under paragraph (1)(ii) of this section) and the Davis-Bacon poster (WH-1321) shall be posted at all times by the contractor and its subcontractors at the site of the work in a prominent and accessible place where it can be easily seen by the workers. (ii)(A) The contracting officer shall require that any class of laborers or mechanics, including helpers, which is not listed in the wage determination and which is to be employed under the contract shall be classified in conformance with the wage determination. The contracting officer shall approve an additional classification and wage rate and fringe benefits therefore only when the following criteria have been met:
(1) Except with respect to helpers as defined as 29 CFR 5.2(n)(4), the work to be performed by the classification requested is not performed by a classification in the wage determination; and (2) The classification is utilized in the area by the construction industry; and (3) The proposed wage rate, including any bona fide fringe benefits, bears a reasonable relationship to the wage rates contained in the wage determination; and (4) With respect to helpers as defined in 29 CFR 5.2(n)(4), such a classification prevails in the area in which the work is performed. (B) If the contractor and the laborers and mechanics to be employed in the classification (if known), or their representatives, and the contracting officer agree on the classification and wage rate (including the amount designated for fringe benefits where appropriate), a report of the action taken shall be sent by the contracting officer to the Administrator of the Wage and Hour Division, Employment Standards Administration, U.S. Department of Labor, Washington, DC 20210. The Administrator, or an authorized representative, will approve, modify, or disapprove every additional classification action within 30 days of receipt and so advise the contracting officer or will notify the contracting officer within the 30-day period that additional time is necessary. (C) In the event the contractor, the laborers or mechanics to be employed in the classification or their representatives, and the

contracting officer do not agree on the proposed classification and wage rate (including the amount designated for fringe benefits, where appropriate), the contracting officer shall refer the questions, including the views of all interested parties and the recommendation of the contracting officer, to the Administrator for determination. The Administrator, or an authorized representative, will issue a determination within 30 days of receipt and so advise the contracting officer or will notify the contracting officer within the 30-day period that additional time is necessary. (D) The wage rate (including fringe benefits where appropriate) determined pursuant to paragraphs (a)(1)(ii) (B) or (C) of this section, shall be paid to all workers performing work in the classification under this contract from the first day on which work is performed in the classification.(iii) Whenever the minimum wage rate prescribed in the contract for a class of laborers or mechanics includes a fringe benefit which is not expressed as an hourly rate, the contractor shall either pay the benefit as stated in the wage determination or shall pay another bona fide fringe benefit or an hourly cash equivalent thereof. (iv) If the contractor does not make payments to a trustee or other third person, the contractor may consider as part of the wages of any laborer or mechanic the amount of any costs reasonably anticipated in providing bona fide fringe benefits under a plan or program, Provided, That the Secretary of Labor has found, upon the written request of the contractor, that the applicable standards of the Davis-Bacon Act have been met. The Secretary of Labor may require the contractor to set aside in a separate account assets for the meeting of obligations under the plan or program. (v)(A) The contracting officer shall require that any class of laborers or mechanics which is not listed in the wage determination and which is to be employed under the contract shall be classified in conformance with the wage determination. The contracting officer shall approve an additional classification and wage rate and fringe benefits therefor only when the following criteria have been met: (1) The work to be performed by the classification requested is not performed by a classification in the wage determination; and (2) The classification is utilized in the area by the construction industry; and (3) The proposed wage rate, including any bona fide fringe benefits, bears a reasonable relationship to the wage rates contained in the wage determination. (B) If the contractor and the laborers and mechanics to be employed in the classification (if known), or their representatives, and the contracting officer agree on the classification and wage rate (including the amount designated for fringe benefits where appropriate), a report of the action taken shall be sent by the contracting officer to the Administrator of the Wage and Hour Division, Employment Standards Administration, Washington, DC 20210. The Administrator, or an authorized representative, will approve, modify, or disapprove every additional classification action within 30 days of receipt and so advise the contracting officer or will notify the contracting officer within the 30-day period that additional time is necessary.(C) In the event the contractor, the laborers or mechanics to be employed in the classification or their representatives, and the contracting officer do not agree on the proposed classification and wage rate (including the amount designated for fringe benefits, where appropriate), the contracting officer shall refer the questions, including the views of all interested parties and the recommendation of the contracting officer, to the Administrator for determination. The Administrator, or an authorized representative, will issue a determination with 30 days of receipt and so advise the contracting officer or will notify the contracting officer within the 30-day period that additional time is necessary. (D) The wage rate (including fringe benefits where appropriate) determined pursuant to paragraphs (a)(1)(v) (B) or (C) of this section, shall be paid to all workers performing work in the classification under this contract from the first day on which work is performed in the classification.

(2) Withholding - The recipient shall upon its own action or upon written request of an authorized representative of the Department of Labor withhold or cause to be withheld from the contractor under this contract or any other Federal contract with the same prime contractor, or any other federally-assisted contract subject to Davis-Bacon prevailing wage requirements, which is held by the same prime contractor, so much of the accrued payments or advances as may be considered necessary to pay laborers and mechanics, including apprentices, trainees, and helpers, employed by the contractor or any subcontractor the full amount of wages required by the contract. In the event of failure to pay any laborer or mechanic, including any apprentice, trainee, or helper, employed or working on the site of the work (or under the United States Housing Act of 1937 or under the Housing Act of 1949 in the construction or development of the project), all or part of the wages required by the contract, the grantee may, after written notice to the contractor, sponsor, applicant, or owner, take such action as may be necessary to cause the suspension of any further payment, advance, or guarantee of funds until such violations have ceased.
(3) Payrolls and basic records - (i) Payrolls and basic records relating thereto shall be maintained by the contractor during the course of the work and preserved for a period of three years thereafter for all laborers and mechanics working at the site of the work (or under the United States Housing Act of 1937, or under the Housing Act of 1949, in the construction or development of the project). Such records shall contain the name, address, and social security number of each such worker, his or her correct classification, hourly rates of wages paid (including rates of contributions or costs anticipated for bona fide fringe benefits or cash equivalents thereof of the types described in section 1(b)(2)(B) of the Davis-Bacon Act), daily and weekly number of hours worked, deductions made and actual wages paid. Whenever the Secretary of Labor has found under 29 CFR 5.5(a)(1)(iv) that the wages of any laborer or mechanic include the amount of any costs reasonably anticipated in providing benefits under a plan or program described in section 1(b)(2)(B) of the Davis-Bacon Act, the contractor shall maintain records which show that the commitment to provide such benefits is enforceable, that the plan or program is financially responsible, and that the plan or program has been communicated in writing to the laborers or mechanics affected, and records which show the costs anticipated or the actual cost incurred in providing such benefits. Contractors employing apprentices or trainees under approved programs shall maintain written evidence of the registration of apprenticeship programs and certification of trainee programs, the registration of the apprentices and trainees, and the ratios and wage rates prescribed in the applicable programs. (ii)(A) The contractor shall submit weekly for each week in which any contract work is performed a copy of all payrolls to the recipient for transmission to the Federal Transit Administration. The payrolls submitted shall set out accurately and completely all of the information required to be maintained under section 5.5(a)(3)(i) of Regulations, 29 CFR part 5. This information may be submitted in any form desired. Optional Form WH-347 is available for this purpose and may be purchased from the Superintendent of Documents (Federal Stock Number 029-005-00014-1), U.S. Government Printing Office, Washington, DC 20402. The prime contractor is responsible for the submission of copies of payrolls by all subcontractors. (B) Each payroll submitted shall be accompanied by a "Statement of Compliance," signed by the contractor or subcontractor or his or her agent who pays or supervises the payment of the persons employed under the contract and shall certify the following: (1) That the payroll for the payroll period contains the information required to be maintained under section 5.5(a)(3)(i) of Regulations, 29 CFR part 5 and that such information is correct and complete; (2) That each laborer or mechanic (including each helper, apprentice, and trainee) employed on the contract during the payroll period has been paid the full weekly wages earned, without rebate, either directly or indirectly, and that

no deductions have been made either directly or indirectly from the full wages earned, other than permissible deductions as set forth in Regulations, 29 CFR part 3; (3) That each laborer or mechanic has been paid not less than the applicable wage rates and fringe benefits or cash equivalents for the classification of work performed, as specified in the applicable wage determination incorporated into the contract. (C) The weekly submission of a properly executed certification set forth on the reverse side of Optional Form WH-347 shall satisfy the requirement for submission of the "Statement of Compliance" required by paragraph (a)(3)(ii)(B) of this section. (D) The falsification of any of the above certifications may subject the contractor or subcontractor to civil or criminal prosecution under section 1001 of title 18 and section 231 of title 31 of the United States Code. (iii) The contractor or subcontractor shall make the records required under paragraph (a)(3)(i) of this section available for inspection, copying, or transcription by authorized representatives of the Federal Transit Administration or the Department of Labor, and shall permit such representatives to interview employees during working hours on the job. If the contractor or subcontractor fails to submit the required records or to make them available, the Federal agency may, after written notice to the contractor, sponsor, applicant, or owner, take such action as may be necessary to cause the suspension of any further payment, advance, or guarantee of funds. Furthermore, failure to submit the required records upon request or to make such records available may be grounds for debarment action pursuant to 29 CFR 5.12.

(4) Apprentices and trainees - (i) Apprentices - Apprentices will be permitted to work at less than the predetermined rate for the work they performed when they are employed pursuant to and individually registered in a bona fide apprenticeship program registered with the U.S. Department of Labor, Employment and Training Administration, Bureau of Apprenticeship and Training, or with a State Apprenticeship Agency recognized by the Bureau, or if a person is employed in his or her first 90 days of probationary employment as an apprentice in such an apprenticeship program, who is not individually registered in the program, but who has been certified by the Bureau of Apprenticeship and Training or a State Apprenticeship Agency (where appropriate) to be eligible for probationary employment as an apprentice. The allowable ratio of apprentices to journeymen on the job site in any craft classification shall not be greater than the ratio permitted to the contractor as to the entire work force under the registered program. Any worker listed on a payroll at an apprentice wage rate, who is not registered or otherwise employed as stated above, shall be paid not less than the applicable wage rate on the wage determination for the classification of work actually performed. In addition, any apprentice performing work on the job site in excess of the ratio permitted under the registered program shall be paid not less than the applicable wage rate on the wage determination for the work actually performed. Where a contractor is performing construction on a project in a locality other than that in which its program is registered, the ratios and wage rates (expressed in percentages of the journeyman's hourly rate) specified in the contractor's or subcontractor's registered program shall be observed. Every apprentice must be paid at not less than the rate specified in the registered program for the apprentice's level of progress, expressed as a percentage of the journeymen hourly rate specified in the applicable wage determination. Apprentices shall be paid fringe benefits in accordance with the provisions of the apprenticeship program. If the apprenticeship program does not specify fringe benefits, apprentices must be paid the full amount of fringe benefits listed on the wage determination for the applicable classification. If the Administrator of the Wage and Hour Division of the U.S. Department of Labor determines that a different practice prevails for the applicable apprentice classification, fringes shall be paid in accordance with that determination. In the event the Bureau of Apprenticeship and Training, or a State Apprenticeship Agency recognized by the Bureau, withdraws approval of an

apprenticeship program, the contractor will no longer be permitted to utilize apprentices at less than the applicable predetermined rate for the work performed until an acceptable program is approved.(ii) Trainees - Except as provided in 29 CFR 5.16, trainees will not be permitted to work at less than the predetermined rate for the work performed unless they are employed pursuant to and individually registered in a program which has received prior approval, evidenced by formal certification by the U.S. Department of Labor, Employment and Training Administration. The ratio of trainees to journeymen on the job site shall not be greater than permitted under the plan approved by the Employment and Training Administration. Every trainee must be paid at not less than the rate specified in the approved program for the trainee's level of progress, expressed as a percentage of the journeyman hourly rate specified in the applicable wage determination. Trainees shall be paid fringe benefits in accordance with the provisions of the trainee program. If the trainee program does not mention fringe benefits, trainees shall be paid the full amount of fringe benefits listed on the wage determination unless the Administrator of the Wage and Hour Division determines that there is an apprenticeship program associated with the corresponding journeyman wage rate on the wage determination which provides for less than full fringe benefits for apprentices. Any employee listed on the payroll at a trainee rate who is not registered and participating in a training plan approved by the Employment and Training Administration shall be paid not less than the applicable wage rate on the wage determination for the classification of work actually performed. In addition, any trainee performing work on the job site in excess of the ratio permitted under the registered program shall be paid not less than the applicable wage rate on the wage determination for the work actually performed. In the event the Employment and Training Administration withdraws approval of a training program, the contractor will no longer be permitted to utilize trainees at less than the applicable predetermined rate for the work performed until an acceptable program is approved. (iii) Equal employment opportunity - The utilization of apprentices, trainees and journeymen under this part shall be in conformity with the equal employment opportunity requirements of Executive Order 11246, as amended, and 29 CFR part 30.

(5) Compliance with Copeland Act requirements - The contractor shall comply with the requirements of 29 CFR part 3, which are incorporated by reference in this contract.

(6) Subcontracts - The contractor or subcontractor shall insert in any subcontracts the clauses contained in 29 CFR 5.5(a)(1) through (10) and such other clauses as the Federal Transit Administration may by appropriate instructions require, and also a clause requiring the subcontractors to include these clauses in any lower tier subcontracts. The prime contractor shall be responsible for the compliance by any subcontractor or lower tier subcontractor with all the contract clauses in 29 CFR 5.5.

(7) Contract termination: debarment - A breach of the contract clauses in 29 CFR 5.5 may be grounds for termination of the contract, and for debarment as a contractor and a subcontractor as provided in 29 CFR 5.12.

(8) Compliance with Davis-Bacon and Related Act requirements - All rulings and interpretations of the DavisBacon and Related Acts contained in 29 CFR parts 1, 3, and 5 are herein incorporated by reference in this contract.

(9) Disputes concerning labor standards - Disputes arising out of the labor standards provisions of this contract shall not be subject to the general disputes clause of this contract. Such disputes shall be resolved in accordance with the procedures of the Department of Labor set forth in 29 CFR parts 5, 6, and 7. Disputes within the meaning of this clause include disputes between the contractor

(or any of its subcontractors) and the contracting agency, the U.S. Department of Labor, or the employees or their representatives.
(10) Certification of Eligibility - (i) By entering into this contract, contractor certifies that neither it (nor he or she) nor any person or firm who has an interest in contractor's firm is a person or firm ineligible to be awarded Government contracts by virtue of section 3(a) of the Davis-Bacon Act or 29 CFR 5.12(a)(1). (ii) No part of this contract shall be subcontracted to any person or firm ineligible for award of a Government contract by virtue of section 3(a) of the Davis-Bacon Act or 29 CFR 5.12(a)(1). (iii) The penalty for making false statements is prescribed in 18 USC 1001.

Bond Requirements

The Contractor shall provide performance and payment bonds as required by 49 CFR § 633.17 and 2 CFR 200.325. Bonds shall cover the full amount of the contract and be issued by a surety acceptable to the Agency.
Construction. As provided in federal regulations and modified by FTA guidance, for each Project or related activities implementing the Underlying Agreement that involve construction, it will provide bid guarantee bonds, contract performance bonds, and payment bonds

1. Performance Bond: Guarantees the faithful performance of all work under this Agreement in accordance with the contract documents.
2. Payment Bond: Guarantees payment to all persons supplying labor and materials in the performance of the work under this Agreement.

Bid Guarantee
Bidders shall furnish a bid guaranty in the form of a bid bond, or certified treasurer's or cashier's check issued by a responsible bank or trust company, made payable to the PVTA. The amount of such guaranty shall be equal to 5% of the total bid price. In submitting this bid, it is understood and agreed by bidder that the PVTA reserves the right to reject any and all bids, or part of any bid, and it is agreed that the Bid may not be withdrawn for a period of [90] days subsequent to the opening of bids, without the written consent of PVTA. It is also understood and agreed that if the undersigned bidder should withdraw any part or all of his bid within [90] days after the bid opening without the written consent of the PVTA, or refuse or be unable to enter into this Contract as provided above, or refuse or be unable to furnish adequate and acceptable Performance and Payment Bonds, or refuse or be unable to furnish adequate and acceptable insurance, as provided above, it shall forfeit its bid guaranty to the extent PVTA's damages occasioned by such withdrawal, or refusal, or inability to enter into an agreement, or provide adequate security thereof. It is further understood and agreed that to the extent the defaulting bidder's bid guaranty shall prove inadequate to fully recompense PVTA for the damages occasioned by default, then the undersigned bidder agrees to indemnify PVTA and pay over to PVTA the difference between the bid guarantee and PVTA'S total damages so as to make PVTA whole. The undersigned understands that any material alteration of any of the above or any of the material contained herein, other than that requested will render the bid unresponsive.
Performance Guarantee
A Performance Guarantee in the amount of 100% of the Contract value is required by the PVTA to ensure faithful performance of the Contract. A Performance Bond shall be provided by the Contractor and shall remain in full force for the term of the Agreement. The successful Bidder shall certify that it will provide the requisite Performance Guarantee to the PVTA within ten (10) business days from Contract execution. The PVTA requires all Performance Bonds to be provided

by a fully qualified surety company acceptable to the PVTA and listed as a company currently authorized under 31 C.F.R. part 22 as possessing a Certificate of Authority as described hereunder. PVTA may require additional performance bond protection when the contract price is increased. The increase in protection shall generally equal 100 percent of the increase in contract price. The PVTA may secure additional protection by directing the PVTA to increase the amount of the existing bond or to obtain an additional bond. If the Bidder chooses to provide a Letter of Credit as its Performance Guarantee, the Bidder shall furnish with its bid, certification that an Irrevocable Stand-By Letter of Credit will be furnished should the Bidder become the successful Contractor. The Bidder shall also provide a statement from the banking institution certifying that an Irrevocable Stand-By Letter of Credit for the action will be provided if the Contract is awarded to the Bidder. The Irrevocable Stand-By Letter of Credit will only be accepted by the PVTA if: 1. A bank in good standing issues it. The PVTA will not accept a Letter of Credit from an entity other than a bank. 2. It is in writing and signed by the issuing bank. 3. It conspicuously states that it is an irrevocable, non-transferable, "standby" Letter of Credit. 4. The PVTA is identified as the Beneficiary. 5. It is in an amount equal to 100% of the Contract value. This amount must be in U.S. dollars. 6. The effective date of the Letter of Credit is the same as the effective date of the Contract 7. The expiration date of the Letter of Credit coincides with the term of this Agreement. 8. It indicates that it is being issued in order to support the obligation of the Contractor to perform under the Contract. It must specifically reference the Contract between the PVTA and the Contractor the work stipulated herein. A-8 The issuing bank's obligation to pay will arise upon the presentation of the original Letter of Credit and a certificate and draft (similar to the attached forms contained in Sections X and Y) to the issuing bank's representative at a location and time to be determined by the parties. This documentation will indicate that the Contractor is in default under the Contract.

Payment Bonds

A Labor and Materials Payment Bond equal to the full value of the contract must be furnished by the contractor to PVTA as security for payment by the Contractor and subcontractors for labor, materials, and rental of equipment. The bond may be issued by a fully qualified surety company acceptable to (PVTA) and listed as a company currently authorized under 31 C.F.R. part 223 as possessing a Certificate of Authority as described thereunder.

Patent Rights and Inventions Developed Under Federally Assisted Agreements

In accordance with 35 U.S.C. §§ 200–212, 37 CFR Part 401, 2 CFR 200 Appendix II (F), and FTA Master Agreement Version 33 § 17, the Contractor agrees as follows:

1. Disclosure of Inventions: The Contractor shall promptly disclose to the Agency, in writing, all inventions, discoveries, or improvements conceived or first actually reduced to practice in the course of or under work performed under this Agreement.
2. Patent Rights: The Contractor may retain ownership of any invention or patent resulting from federally assisted work, subject to the rights of the federal government as set forth in 35 U.S.C. §§ 200–212 and implementing regulations at 37 CFR Part 401. The federal government shall have a nonexclusive, nontransferable, irrevocable, paid-up license to practice or have practiced the invention for or on behalf of the United States.
3. Agency Rights and Reporting: The Contractor shall comply with all reporting, recordkeeping, and election of rights requirements established by the Agency and federal regulations, including providing the Agency with copies of patent applications, notices of invention, and patent grants as required.

4. Subcontracts: The Contractor shall include appropriate patent rights provisions in all subcontracts or lower-tier agreements to ensure compliance with federal requirements and the Agency's rights.
5. Failure to Comply: Noncompliance with these requirements may constitute a material breach of this Agreement and may result in remedies including, but not limited to, withholding of payments, termination, or recovery of rights to inventions as allowed under law.

DOCUMENT 007150 – PREVAILING WAGE RATES

1.1 PREVAILING WAGE RATES

A. The Commonwealth of Massachusetts Executive Office of Labor and Workforce Development Department of Labor Standards Prevailing Wage and Davis-Bacon Wage Rates are bound herein immediately following this page.

B. For each labor classification required to construct the project, the contractor shall pay the higher of the applicable Davis-Bacon wage rate or the State prevailing wage rate.

END OF DOCUMENT 007150

"General Decision Number: MA20260003 01/02/2026

Superseded General Decision Number: MA20250003

State: Massachusetts

Construction Type: Building

Counties: Berkshire, Franklin, Hampden and Hampshire Counties in Massachusetts.

BUILDING CONSTRUCTION PROJECTS Does not include residential construction consisting of single family homes and apartments up to and including 4 stories)

Modification Number	Publication Date
0	01/02/2026

ASBE0006-011 09/01/2024

	Rates	Fringes
Insulator/asbestos worker (Includes the application of all insulating materials, protective coverings, coatings and finishes to all types of mechanical systems)	$ 44.36	36.63

BOIL0029-001 01/01/2025

	Rates	Fringes
BOILERMAKER	$ 50.62	28.82

BRMA0001-001 08/01/2023

SPRINGFIELD/PITTSFIELD CHAPTER FRANKLIN, HAMPDEN, and HAMPSHIRE COUNTIES

	Rates	Fringes
BRICKLAYER BRICKLAYERS; CEMENT MASONS; PLASTERERS; STONE MASONS; MARBLE, TILE & TERRAZZO WORKERS	$ 50.81	32.27

BRMA0001-003 08/01/2023

SPRINGFIELD/PITTSFIELD
BERKSHIRE

	Rates	Fringes
BRICKLAYER BRICKLAYERS; CEMENT MASONS; PLASTERERS; STONE MASONS; MARBLE, TILE & TERRAZZO WORKERS	$ 50.81	32.27

CARP0056-014 08/01/2024

	Rates	Fringes
PILEDRIVERMAN	$ 55.79	35.47

CARP0336-006 09/01/2025

Franklin County (Erving, Orange, North Orange and Warwick)

	Rates	Fringes
CARPENTER	$ 43.33	27.82

CARP0336-009 09/01/2025

HAMPDEN; HAMPSHIRE AND FRANKLIN (Remainder)

	Rates	Fringes
Carpenter/Lather/Drywall Applicator	$ 43.33	27.82

CARP0336-013 09/01/2025

BERKSHIRE COUNTY

	Rates	Fringes
CARPENTER	$ 43.33	27.82

CARP1121-004 04/21/2025

	Rates	Fringes
MILLWRIGHT	$ 43.42	33.00

CARP2168-003 09/01/2025

	Rates	Fringes
FLOOR LAYER: Carpet	$ 43.23	27.79

ELEC0007-002 06/29/2025

HAMPDEN (Except Chester & Holyoke); HAMPSHIRE (Belchertown, Ware)

	Rates	Fringes
ELECTRICIAN	$ 52.16	29.56

ELEC0007-003 06/29/2025

BERKSHIRE; FRANKLIN; HAMPDEN (Chester, Holyoke); HAMPSHIRE (Except Belchertown, Ware)

	Rates	Fringes
ELECTRICIAN	$ 52.16	29.56

ELEC0007-006 06/29/2025

	Rates	Fringes
Teledata System Installer	$ 52.16	29.56

ELEC0042-003 09/03/2017

	Rates	Fringes
Line Construction:		
Heavy Equipment Operator	$ 42.26	6.5%+19.81
Lineman, Cable Splicer and Dynamite Man	$ 46.96	6.5%+22.00
Material Man, Tractor Trailer Driver, Equipment Operator	$ 39.92	6.5%+19.21

ELEV0041-001 01/01/2025

	Rates	Fringes
ELEVATOR MECHANIC	$ 66.41	38.435+a+b

FOOTNOTE:
a.Vacation: 6%/under 5 years based on regular hourly rate for all hours worked. 8%/over 5 years based on regular hourly rate for all hours worked.
b. PAID HOLIDAYS: New Year's Day; Memorial Day; Independence Day; Labor Day; Veterans' Day; Thanksgiving Day; the Friday after Thanksgiving Day; and Christmas Day.

ENGI0098-001 06/01/2024

	Rates	Fringes
Power equipment operators: (BUILDING & RESIDENTIAL)		
Group 1	$ 41.23	30.58+A
Group 2	$ 40.92	30.58+A
Group 3	$ 40.70	30.58+A
Group 4	$ 37.47	30.58+A
Group 5	$ 36.35	30.58+A
Group 6	$ 34.41	30.58+A
Group 7	$ 52.73	30.58+A
Group 8	$ 42.41	30.58+A
Group 9	$ 42.72	30.58+A
Group 10	$ 44.73	30.58+A
Group 11	$ 45.73	30.58+A
Group 12	$ 47.23	30.58+A
Group 13	$ 48.23	30.58+A
Group 14	$ 49.23	30.58+A
Group 15	$ 50.73	30.58+A

HAZARDOUS WASTE PREMIUM $2.00

FOOTNOTE FOR POWER EQUIPMENT OPERATORS:
Group 8 and Group 9 are per day wages.
A. Paid Holidays: New year's Day, Washington's Birthday, Memorial Day, Independence Day, Labor Day, Columbus Day, Veterans Day, Thanksgiving Day and Christmas Day

POWER EQUIPMENT OPERATORS CLASSIFICATIONS
Group 1: Shovels; crawlers and truck cranes including all tower; self-propelled hydraulic cranes 10 tons and over; draglines; clam shells; cableways; shaft hoists; mucking

machines derricks; backhoes; bulldozers; gradalls; elevating graders; pile drivers; concrete pavers; trenching machines; front end loaders- 5 1/2 cu yds and over; dual drum paver; automatic grader-excavator(C.M.I. or equal); scrapers towing pan or wagon; tandem dozers or push cats(2 units in tandem); shotcrete machine; tunnel boring machine; combination backhoe/loader 3/4 cu yd hoe or over; jet engine dryer; tree shredder; post hole digger; post hole hammer; post extractor; truck mounted concrete pump with boom; roto-mill; Grader; Horizontal Drilling Machine; John Henry Rock Drill and similar equipment.
Group 2: Rotary drill with mounted compressor; compressor house (3 to 6 compressors); rock and earth boring machines (excluding McCarthy and similar drills); front end loaders 4 cu yds to 5 1/2 cu yds); forklifts-7 ft lift and over 3 ton capacity; scraper 21 yds and over (struck load); sonic hammer console; reclaimers road planer/milling machine; cal tracks; ballast regulators; rail anchor machines; switch tampers, asphalt pavers; mechanic; welder and transfer machine.
Group 3: Combination backhoe/loader up to 3/4 cu yd; scrapers up to 21 cu yd (struck load, self propelled or tractor drawn); tireman; front end loaders up to 4 yds; well drillers; engineer or fireman on high pressure boiler; self-loading batch plant; well point operators electric pumps used in well point system; pumps, 16 inches and over (total discharge); compressor, one or two 900 cu ft and over; powered grease truck; tunnel locomotives and dingys; grout pumps; hydraulic jacks; boom truck; hydraulic cranes- up to 10 ton.
Group 4: Asphalt rollers; self-powered rollers and compactors; tractor without blade drawing sheepsfoot roller; rubber tire roller; vibratory roller or other type of compactors including machines for pulverizing and aerating soil; york rake.
Group 5: Hoists; conveyors; power pavement breakers; self-powered concrete pavement finishing machines; two bag mixers with skip; McCarthy and similar drills; batch plants (not self loading); bulk cement plants; self-propelled material spreaders; three or more 10 KW light plants; 30 KW or more generators; power broom.
Group 6: Compressor (one or two) 315 cu ft to 900 cu ft; pumps 4 inches to 16 inches (total discharge).
Group 7: Compressors up to 315 cu ft; small mixers with skip; pumps up to 4 inches; power heaters; oiler; A-frame trucks; forklifts-up to 7 ft. lift and up to 3 ton capacity; hydro broom; stud welder.
Group 8: Truck crane crews
Group 9: Oiler
Group 10: Master Mechanic
Group 11: Boom lengths over 150 feet including jib
Group 12: Boom lengths over 200 feet including jib
Group 13: Boom lengths over 250 feet including jib
Group 14: Boom lengths over 300 feet including jib
Group 15: Boom lengths over 350 feet including jib

IRON0007-014 09/16/2025

BERKSHIRE (Becket, East Otis, Hinsdale, Monterey, New Marlboro, North Otis, Otis, Peru, Sandisfield, Savoy, Sheffield, Washington, Windsor); FRANKLIN; HAMPDEN; HAMPSHIRE

	Rates	Fringes

IRONWORKER.....$ 41.89 33.90

IRON0012-003 07/01/2025

BERKSHIRE (Lee)

	Rates	Fringes
IRONWORKER	$ 40.75	31.91

IRON0012-004 07/01/2025

BERKSHIRE (Remainder of County)

	Rates	Fringes
Ironworkers:		
Sheeter	$ 41.00	31.91
Structural, Ornamental, Reinforcing, Fence Erector, Machinery Mover, Rigger, Rodman, Stone Derrickman	$ 40.75	31.91

LABO0022-002 12/01/2024

FRANKLIN (Orange, Warwick)

	Rates	Fringes
Laborers:		
GROUP 1	$ 38.95	29.70
GROUP 2	$ 39.20	29.70
GROUP 3	$ 39.70	29.70
GROUP 4	$ 39.95	29.70
GROUP 5	$ 39.70	29.70
GROUP 6	$ 40.95	29.70

LABORERS CLASSIFICATIONS

GROUP 1: Laborers; carpenter tenders; cement finisher tenders, plasterer tenders

GROUP 2: Asphalt raker; fence and guard rail erector; laser beam operator; mason tenmder; pipelayer; pneumatic drill operator; pneumatic tool operator; wagon drill operatorm jackhammer operator, pavement breaker, carbide core drilling machine, chain saw operator, barco type jumping tampers, concrete pump, motorized mortar miner, ride-on motorized buggy

GROUP 3: Air track operator; block paver; rammer; curb setter, hydraulic and similar self-powered drills

GROUP 4: Blaster; powderman

GROUP 5: Precast floor and roof, plank erector

GROUP 6: Asbestos Abatement, Toxic and Hazardous waste laborers

---

LABO0022-003 12/01/2024

	Rates	Fringes
Plasterer tender		
BARNSTABLE, BRISTOL, DUKES, ESSEX, NANTUCKET, MIDDLESEX (with the exception of Arlington, Belmont, Burlington, Cambridge, Everett, Malden, Medford, Melrose, Reading, Somerville, Stoneham, Wakefield, Winchester, Winthrop and Woburn); NORFOLK (with the exception of Brookline Dedham and Milton) COUNTIES.	$ 38.95	29.70
SUFFOLK COUNTY (Boston, Chelsea, Revere, Winthrop, Deer Island, Nut Island); MIDDLESEX COUNTY (Arlington, Belmont, Burlington, Cambridge, Everett, Malden, Medford, Melrose, Reading, Somerville, Stoneham, Wakefield, Winchester, Winthrop and Woburn only); NORFOLK COUNTY (Brookline, Dedham, and Milton only)....	$ 46.20	29.70

LABO0473-001 12/01/2024

BERKSHIRE COUNTY, FRANKLIN COUNTY, (THE TOWNS OF ASHFIELD, BUCKLAND, CHARLEMONT, HAWLEY, HEATH, AND ROWE ONLY) HAMPSHIRE COUNTY (THE TOWNS OF CHESTERFIELD, CUMMINGTON, GOSHEN, MIDDLEFIELD, PLAINFIELD, AND WORTHINGTON ONLY)

	Rates	Fringes
Laborers:	$ 31.54	25.63

LABO0596-001 12/02/2024

HAMPDEN COUNTY, HAMPSHIRE COUNTY (WITH THE EXCEPTION OF CHESTERFIELD, CUMMINNGTON, GOSHEN, MIDDLEFIELD, PLAINFIELD, AND WORTHINGTON) FRANKLIN COUNTY (WITH THE EXCEPTION OF ASHFIELD, BUCKLAND, CHARLEMONT, HAULY, HEATH, ORANGE,ROWE AND WARWICK)

	Rates	Fringes
Laborers:		
GROUP 1	$ 35.00	28.87
GROUP 2	$ 35.25	28.87
GROUP 3	$ 35.75	28.87
GROUP 4	$ 35.75	28.87
GROUP 5	$ 36.00	28.87

LABORERS CLASSIFICATIONS

GROUP 1: Laborers, carpenter tenders, wrecking laborers

GROUP 2: Asphalt rakers, carbide core driller operators, chain saw operators, pipelayers, jackhammer and paving

breaker operators, Barco type jumping tampers, laser beam operators, concrete pump operators, mason tenders, motorized mortar mixers, ride-on motorized buggy operators, wagon drill operators

GROUP 3: precast floor and roof plank erectors, sign erectors, asbestos removal laborers, haz-mat laborers

GROUP 4: Air track operators, block pavers, rammers and curb setters, hydraulic and similar self-powered drills

GROUP 5: Powderman and blaster

MARB0097-001 03/01/2012

	Rates	Fringes
MARBLE FINISHER	$ 28.43	25.85

PAIN0011-008 06/01/2025

	Rates	Fringes
GLAZIER	$ 43.13	21.00

FOOTNOTE:
A. PAID HOLIDAY: LABOR DAY (provided employee has worked any part of the week prior to Labor Day and any part of the week after Labor Day

---

PAIN0035-007 07/01/2024

	Rates	Fringes
PAINTER		
NEW CONSTRUCTION:		
Brush, Taper	$ 38.08	31.95
Spray, Sandblast	$ 39.48	31.95
REPAINT:		
Brush, Taper	$ 35.40	31.95
Spray, Sandblast	$ 36.80	31.95

PLUM0004-003 09/01/2025

FRANKLIN (Orange)

	Rates	Fringes
Plumber and Steamfitter	$ 55.00	31.57

PLUM0104-004 09/17/2025

BERKSHIRE (Becket, Otis, Sandisfield); FRANKLIN (Except Monroe, Rowe, and the Western part of Charlemont); HAMPDEN; HAMPSHIRE

	Rates	Fringes
Plumbers and Pipefitters	$ 52.26	31.05

FOOTNOTE:
A. Two paid holidays, Independence Day and Labor Day, provided the employee has been employed seven days prior to

the holiday by the same employer

PLUM0104-009 09/17/2025

BERKSHIRE (Except Otis, Becket, Sandisfield); FRANKLIN (Monroe, Rowe and the Western part of Charlemont)

	Rates	Fringes
Plumber and Steamfitter	$ 52.26	31.05

FOOTNOTE FOR PLUMBERS & STEAMFITTERS:
A. Paid holidays: Independence Day and Labor Day, provided the employee has been employed seven days prior to the holiday by the same employer.

ROOF0248-001 07/16/2025

All tear-off and/or removal (of any types of roofing), and all spudding, sweeping, vacuuming and/or cleanup of any and all areas of any type where a roof is to be relaid.

	Rates	Fringes
Roofers:		
Composition Roofers & Damp Waterproofers	$ 42.48	30.14
Pitch,Slate, Tile and Precast Concrete	$ 42.48	30.14

SFMA0550-003 10/01/2025

	Rates	Fringes
SPRINKLER FITTER	$ 64.85	40.76

a. PAID HOLIDAYS: Memorial Day, July 4th, Labor Day, Thanksgiving Day and Christmas Day, provided the employee has been in the employment of a contractor 20 working days prior to any such paid holidays.

SHEE0063-001 07/01/2025

	Rates	Fringes
Sheet metal worker	$ 43.48	36.46

TEAM0379-001 06/01/2025

	Rates	Fringes
Truck drivers:		
Group 1	$ 40.78	37.35+a+b
Group 2	$ 40.95	37.35+a+b
Group 3	$ 41.02	37.35+a+b
Group 4	$ 41.14	37.35+a+b
Group 5	$ 41.24	37.35+a+b
Group 6	$ 41.53	37.35+a+b
Group 7	$ 41.82	37.35+a+b

POWER TRUCKS $.25 DIFFERENTIAL BY AXLE
TUNNEL WORK (UNDERGROUND ONLY) $.40 DIFFERENTIAL BY AXLE
HAZARDOUS MATERIALS (IN HOT ZONE ONLY) $2.00 PREMIUM

TRUCK DRIVERS CLASSIFICATIONS

Group 1: Station wagons; panel trucks; and pickup trucks

Group 2: Two axle equipment; & forklift operator

Group 3: Three axle equipment and tireman

Group 4: Four and Five Axle equipment

Group 5: Specialized earth moving equipment under 35 tons other than conventional type trucks; low bed; vachual; mechanics, paving restoration equipment

Group 6: Specialized earth moving equipment over 35 tons

Group 7: Trailers for earth moving equipment (double hookup)

FOOTNOTES:

A. PAID HOLIDAYS: New Year's Day, Washington's Birthday, Memorial Day, Independence Day, Labor Day, Patriot's Day, Columbus Day, Veteran's Day, Thanksgiving Day and Christmas Day

B. PAID VACATION: Employees with 4 months to 1 year of service receive 1/2 day's pay per month; 1 week vacation for 1 - 5 years of service; 2 weeks vacation for 5 - 10 years of service; and 3 weeks vacation for more than 10 years of service

---

WELDERS - Receive rate prescribed for craft performing operation to which welding is incidental.

==========

Note: Executive Order (EO) 13706, Establishing Paid Sick Leave for Federal Contractors applies to all contracts subject to the Davis-Bacon Act for which the contract is awarded (and any solicitation was issued) on or after January 1, 2017. If this contract is covered by the EO, the contractor must provide employees with 1 hour of paid sick leave for every 30 hours they work, up to 56 hours of paid sick leave each year. Employees must be permitted to use paid sick leave for their own illness, injury or other health-related needs, including preventive care; to assist a family member (or person who is like family to the employee) who is ill, injured, or has other health-related needs, including preventive care; or for reasons resulting from, or to assist a family member (or person who is like family to the employee) who is a victim of, domestic violence, sexual assault, or stalking. Additional information on contractor requirements and worker protections under the EO is available at https://www.dol.gov/agencies/whd/government-contracts.

Note: Executive Order 13658 generally applies to contracts subject to the Davis-Bacon Act that were awarded on or between

January 1, 2015 and January 29, 2022, and that have not been renewed or extended on or after January 30, 2022. Executive Order 13658 does not apply to contracts subject only to the Davis-Bacon Related Acts regardless of when they were awarded. If a contract is subject to Executive Order 13658, the contractor must pay all covered workers at least $13.30 per hour (or the applicable wage rate listed on this wage determination, if it is higher) for all hours spent performing on the contract in 2025. The applicable Executive Order minimum wage rate will be adjusted annually. Additional information on contractor requirements and worker protections under Executive Order 13658 is available at www.dol.gov/whd/govcontracts.

Unlisted classifications needed for work not included within the scope of the classifications listed may be added after award only as provided in the labor standards contract clauses (29CFR 5.5 (a) (1) (iii)).

The body of each wage determination lists the classifications and wage rates that have been found to be prevailing for the type(s) of construction and geographic area covered by the wage determination. The classifications are listed in alphabetical order under rate identifiers indicating whether the particular rate is a union rate (current union negotiated rate), a survey rate, a weighted union average rate, a state adopted rate, or a supplemental classification rate.

Union Rate Identifiers

A four-letter identifier beginning with characters other than ""SU"", ""UAVG"", ?SA?, or ?SC? denotes that a union rate was prevailing for that classification in the survey. Example: PLUM0198-005 07/01/2024. PLUM is an identifier of the union whose collectively bargained rate prevailed in the survey for this classification, which in this example would be Plumbers. 0198 indicates the local union number or district council number where applicable, i.e., Plumbers Local 0198. The next number, 005 in the example, is an internal number used in processing the wage determination. The date, 07/01/2024 in the example, is the effective date of the most current negotiated rate.

Union prevailing wage rates are updated to reflect all changes over time that are reported to WHD in the rates in the collective bargaining agreement (CBA) governing the classification.

Union Average Rate Identifiers

The UAVG identifier indicates that no single rate prevailed for those classifications, but that 100% of the data reported for the classifications reflected union rates. EXAMPLE: UAVG-OH-0010 01/01/2024. UAVG indicates that the rate is a weighted union average rate. OH indicates the State of Ohio. The next number, 0010 in the example, is an internal number used in producing the wage determination. The date, 01/01/2024 in the example, indicates the date the wage determination was updated to reflect the most current union average rate.

A UAVG rate will be updated once a year, usually in January, to reflect a weighted average of the current rates in the

collective bargaining agreements on which the rate is based.

Survey Rate Identifiers

The ""SU"" identifier indicates that either a single non-union rate prevailed (as defined in 29 CFR 1.2) for this classification in the survey or that the rate was derived by computing a weighted average rate based on all the rates reported in the survey for that classification. As a weighted average rate includes all rates reported in the survey, it may include both union and non-union rates. Example: SUFL2022-007 6/27/2024. SU indicates the rate is a single non-union prevailing rate or a weighted average of survey data for that classification. FL indicates the State of Florida. 2022 is the year of the survey on which these classifications and rates are based. The next number, 007 in the example, is an internal number used in producing the wage determination. The date, 6/27/2024 in the example, indicates the survey completion date for the classifications and rates under that identifier.

?SU? wage rates typically remain in effect until a new survey is conducted. However, the Wage and Hour Division (WHD) has the discretion to update such rates under 29 CFR 1.6(c)(1).

State Adopted Rate Identifiers

The ""SA"" identifier indicates that the classifications and prevailing wage rates set by a state (or local) government were adopted under 29 C.F.R 1.3(g)-(h). Example: SAME2023-007 01/03/2024. SA reflects that the rates are state adopted. ME refers to the State of Maine. 2023 is the year during which the state completed the survey on which the listed classifications and rates are based. The next number, 007 in the example, is an internal number used in producing the wage determination. The date, 01/03/2024 in the example, reflects the date on which the classifications and rates under the ?SA? identifier took effect under state law in the state from which the rates were adopted.

WAGE DETERMINATION APPEALS PROCESS

1) Has there been an initial decision in the matter? This can be:

a) a survey underlying a wage determination
b) an existing published wage determination
c) an initial WHD letter setting forth a position on a wage determination matter
d) an initial conformance (additional classification and rate) determination

On survey related matters, initial contact, including requests for summaries of surveys, should be directed to the WHD Branch of Wage Surveys. Requests can be submitted via email to davisbaconinfo@dol.gov or by mail to:

Branch of Wage Surveys
Wage and Hour Division
U.S. Department of Labor
200 Constitution Avenue, N.W.
Washington, DC 20210

Regarding any other wage determination matter such as

conformance decisions, requests for initial decisions should be directed to the WHD Branch of Construction Wage Determinations. Requests can be submitted via email to BCWD-Office@dol.gov or by mail to:

Branch of Construction Wage Determinations
Wage and Hour Division
U.S. Department of Labor
200 Constitution Avenue, N.W.
Washington, DC 20210

2) If an initial decision has been issued, then any interested party (those affected by the action) that disagrees with the decision can request review and reconsideration from the Wage and Hour Administrator (See 29 CFR Part 1.8 and 29 CFR Part 7). Requests for review and reconsideration can be submitted via email to dba.reconsideration@dol.gov or by mail to:

Wage and Hour Administrator
U.S. Department of Labor
200 Constitution Avenue, N.W.
Washington, DC 20210

The request should be accompanied by a full statement of the interested party's position and any information (wage payment data, project description, area practice material, etc.) that the requestor considers relevant to the issue.

3) If the decision of the Administrator is not favorable, an interested party may appeal directly to the Administrative Review Board (formerly the Wage Appeals Board). Write to:

Administrative Review Board
U.S. Department of Labor
200 Constitution Avenue, N.W.
Washington, DC 20210.

==========

END OF GENERAL DECISION
"

THE COMMONWEALTH OF MASSACHUSETTS
EXECUTIVE OFFICE OF LABOR AND WORKFORCE DEVELOPMENT
DEPARTMENT OF LABOR STANDARDS
Prevailing Wage Rates

MAURA HEALEY
Governor
KIM DRISCOLL
Lt. Governor

As determined by the Director under the provisions of the Massachusetts General Laws, Chapter 149, Sections 26 to 27H

LAUREN JONES
Secretary
MICHAEL FLANAGAN
Director

Awarding Authority:	Pioneer Valley Transit Authority	**City/Town:**	AMHERST
Contract Number:			
Description of Work:	Replacement of existing in-ground bus lift in bus chassis wash bay and removal of fall protection beam. Work includes demo of the existing concrete, beam, and connections. Installation of new concrete and connections.		
Job Location:	185 Holdsworth Way, Amherst, MA 01003		

Information about Prevailing Wage Schedules for Awarding Authorities and Contractors

- The wage rates will remain in effect for the duration of the project, except in the case of multi-year public construction projects. For construction projects lasting longer than one year, awarding authorities must request an updated wage schedule no later than two weeks before the anniversary of the date the contract was executed by the awarding authority and the general contractor. For multi-year CM AT RISK projects, the awarding authority must request an annual update no later than two weeks before the anniversary date, determined as the earlier of: (a) the execution date of the GMP Amendment, or (b) the execution date of the first amendment to permit procurement of construction services. The updated wage schedule must be provided to all contractors, including general and sub-contractors, working on the construction project.
- This annual update requirement is generally not applicable to 27F “rental of equipment” contracts. For such contracts, the prevailing wage rates issued by DLS shall remain in effect for the duration of the contract term. However, if the prevailing wage rate sheet issued does not contain wage rates for each year covered by the contract term, the Awarding Authority must request updated rate sheets from DLS and provide them to the contractor to ensure the correct rates are being paid throughout the duration of the contract. Additionally, if an Awarding Authority exercises an option to renew or extend the contract term, they must request updated rate sheets form DLS and provide them to the contractor.
- This wage schedule applies only to the specific project referenced at the top of this page and uniquely identified by the “Wage Request Number” on all pages of this schedule.
- An Awarding Authority must request an updated wage schedule if it has not opened bids or selected a contractor within 90 days of the date of issuance of the wage schedule. For CM AT RISK projects (bid pursuant to G.L. c.149A), the earlier of: (a) the execution date of the GMP Amendment, or (b) the bid for the first construction scope of work must be within 90-days of the wage schedule issuance date.
- The wage schedule shall be incorporated in any advertisement or call for bids for the project as required by M.G.L. c. 149, § 27. The wage schedule shall be made a part of the contract awarded for the project. The wage schedule must be posted in a conspicuous place at the work site for the life of the project in accordance with M.G.L. c. 149 § 27. The wages listed on the wage schedule must be paid to employees performing construction work on the project whether they are employed by the prime contractor, a filed sub-bidder, or a sub-contractor.
- Apprentices working on the project are required to be registered with the Massachusetts Division of Apprentice Standards (DAS). Apprentices must keep their apprentice identification card on their persons during all work hours on the project. An apprentice registered with DAS may be paid the lower apprentice wage rate at the applicable step as provided on the prevailing wage schedule. **Any apprentice not registered with DAS regardless of whether they are registered with another federal, state, local, or private agency must be paid the journeyworker's rate.**
- Every contractor or subcontractor working on the construction project must submit weekly payroll reports and a Statement of Compliance directly to the awarding authority by mail or email and keep them on file for three years. Each weekly payroll report must contain: the employee’s name, address, occupational classification, hours worked, and wages paid. Do not submit weekly payroll reports to DLS. For a sample payroll reporting form go to http://www.mass.gov/dols/pw.
- Contractors with questions about the wage rates or classifications included on the wage schedule have an affirmative obligation to inquire with DLS at (617) 626-6953.
- Contractors must obtain the wage schedules from awarding authorities. Failure of a contractor or subcontractor to pay the prevailing wage rates listed on the wage schedule to all employees who perform construction work on the project is a violation of the law and subjects the contractor or subcontractor to civil and criminal penalties.
- Employees not receiving the prevailing wage rate set forth on the wage schedule may file a complaint with the Fair Labor Division of the office of the Attorney General at (617) 727-3465.

Construction

Classification	Effective Date	Base Wage	Health	Pension	Annuity	Supplemental Unemployment	Total Rate
(2 AXLE) DRIVER - EQUIPMENT TEAMSTERS JOINT COUNCIL NO. 10 TEAMSTERS JOINT COUNCIL NO. 10 ZONE B	1/1/2026	$40.95	$16.17	$21.78	$0.00	$0.00	$78.90
	6/1/2026	$41.95	$16.17	$21.78	$0.00	$0.00	$79.90
	12/1/2026	$41.95	$16.17	$23.52	$0.00	$0.00	$81.64
	1/1/2027	$41.95	$16.77	$23.52	$0.00	$0.00	$82.24
(3 AXLE) DRIVER - EQUIPMENT TEAMSTERS JOINT COUNCIL NO. 10 TEAMSTERS JOINT COUNCIL NO. 10 ZONE B	1/1/2026	$41.02	$16.17	$21.78	$0.00	$0.00	$78.97
	6/1/2026	$42.02	$16.17	$21.78	$0.00	$0.00	$79.97
	12/1/2026	$42.02	$16.17	$23.52	$0.00	$0.00	$81.71
	1/1/2027	$42.02	$16.77	$23.52	$0.00	$0.00	$82.31
(4 & 5 AXLE) DRIVER - EQUIPMENT TEAMSTERS JOINT COUNCIL NO. 10 TEAMSTERS JOINT COUNCIL NO. 10 ZONE B	1/1/2026	$41.14	$16.17	$21.78	$0.00	$0.00	$79.09
	6/1/2026	$42.14	$16.17	$21.78	$0.00	$0.00	$80.09
	12/1/2026	$42.14	$16.17	$23.52	$0.00	$0.00	$81.83
	1/1/2027	$42.14	$16.77	$23.52	$0.00	$0.00	$82.43
ADS/SUBMERSIBLE PILOT PILE DRIVER LOCAL 56 PILE DRIVER LOCAL 56 (ZONE 3) For apprentice rates see "Apprentice- PILE DRIVER"	8/1/2024	$117.16	$10.08	$11.62	$12.67	$0.00	$151.53
AIR TRACK OPERATOR LABORERS LABORERS - ZONE 3 (BUILDING & SITE) For apprentice rates see "Apprentice- LABORER"	12/1/2025	$36.75	$10.65	$9.75	$8.57	$0.00	$65.72
	6/1/2026	$38.05	$10.65	$9.75	$8.57	$0.00	$67.02
	12/7/2026	$39.35	$10.65	$9.75	$8.57	$0.00	$68.32
	6/7/2027	$40.75	$10.65	$9.75	$8.57	$0.00	$69.72
	12/6/2027	$42.15	$10.65	$9.75	$8.57	$0.00	$71.12
	6/5/2028	$43.65	$10.65	$9.75	$8.57	$0.00	$72.62
	12/4/2028	$45.15	$10.65	$9.75	$8.57	$0.00	$74.12
AIR TRACK OPERATOR (HEAVY & HIGHWAY) LABORERS LABORERS - ZONE 3 (HEAVY & HIGHWAY) For apprentice rates see "Apprentice- LABORER (Heavy and Highway)"	12/1/2025	$36.74	$10.65	$9.75	$6.56	$0.00	$63.70
	6/1/2026	$38.04	$10.65	$9.75	$6.56	$0.00	$65.00
	12/1/2026	$39.33	$10.65	$9.75	$6.56	$0.00	$66.29
ASBESTOS WORKER (PIPES & TANKS) HEAT & FROST INSULATORS LOCAL 6 HEAT & FROST INSULATORS LOCAL 6 (SPRINGFIELD)	12/1/2025	$40.32	$14.50	$4.30	$6.25	$0.00	$65.37
ASPHALT RAKER LABORERS LABORERS - ZONE 3 (BUILDING & SITE) For apprentice rates see "Apprentice- LABORER"	12/1/2025	$36.25	$10.65	$9.75	$8.57	$0.00	$65.22
	6/1/2026	$37.55	$10.65	$9.75	$8.57	$0.00	$66.52
	12/7/2026	$38.85	$10.65	$9.75	$8.57	$0.00	$67.82
	6/7/2027	$40.25	$10.65	$9.75	$8.57	$0.00	$69.22
	12/6/2027	$41.65	$10.65	$9.75	$8.57	$0.00	$70.62
	6/5/2028	$43.15	$10.65	$9.75	$8.57	$0.00	$72.12
	12/4/2028	$44.65	$10.65	$9.75	$8.57	$0.00	$73.62
ASPHALT RAKER (HEAVY & HIGHWAY) LABORERS LABORERS - ZONE 3 (HEAVY & HIGHWAY)	12/1/2025	$36.24	$10.65	$9.75	$6.56	$0.00	$63.20
	6/1/2026	$37.54	$10.65	$9.75	$6.56	$0.00	$64.50
	12/1/2026	$38.83	$10.65	$9.75	$6.56	$0.00	$65.79

Construction

Classification	Effective Date	Base Wage	Health	Pension	Annuity	Supplemental Unemployment	Total Rate
For apprentice rates see "Apprentice- LABORER (Heavy and Highway)							
AUTOMATIC GRADER-EXCAVATOR (RECLAIMER) OPERATING ENGINEERS LOCAL 98 OPERATING ENGINEERS LOCAL 98	12/1/2023	$39.56	$13.78	$12.15	$3.00	$0.00	$68.49
For apprentice rates see "Apprentice- OPERATING ENGINEERS"							
BACKHOE/FRONT-END LOADER OPERATOR OPERATING ENGINEERS LOCAL 98 OPERATING ENGINEERS LOCAL 98	12/1/2023	$39.56	$13.78	$12.15	$3.00	$0.00	$68.49
For apprentice rates see "Apprentice- OPERATING ENGINEERS"							
BARCO-TYPE JUMPING TAMPER LABORERS LABORERS - ZONE 3 (BUILDING & SITE)	12/1/2025	$36.25	$10.65	$9.75	$8.57	$0.00	$65.22
	6/1/2026	$37.55	$10.65	$9.75	$8.57	$0.00	$66.52
	12/7/2026	$38.85	$10.65	$9.75	$8.57	$0.00	$67.82
	6/7/2027	$40.25	$10.65	$9.75	$8.57	$0.00	$69.22
	12/6/2027	$41.65	$10.65	$9.75	$8.57	$0.00	$70.62
	6/5/2028	$43.15	$10.65	$9.75	$8.57	$0.00	$72.12
	12/4/2028	$44.65	$10.65	$9.75	$8.57	$0.00	$73.62
For apprentice rates see "Apprentice- LABORER"							
BATCH/CEMENT PLANT - ON SITE OPERATING ENGINEERS LOCAL 98 OPERATING ENGINEERS LOCAL 98	12/1/2023	$39.03	$13.78	$12.15	$3.00	$0.00	$67.96
For apprentice rates see "Apprentice- OPERATING ENGINEERS"							
BLOCK PAVER, RAMMER / CURB SETTER LABORERS LABORERS - ZONE 3 (BUILDING & SITE)	12/1/2025	$36.75	$10.65	$9.75	$8.57	$0.00	$65.72
	6/1/2026	$38.05	$10.65	$9.75	$8.57	$0.00	$67.02
	12/7/2026	$39.35	$10.65	$9.75	$8.57	$0.00	$68.32
	6/7/2027	$40.75	$10.65	$9.75	$8.57	$0.00	$69.72
	12/6/2027	$42.15	$10.65	$9.75	$8.57	$0.00	$71.12
	6/5/2028	$43.65	$10.65	$9.75	$8.57	$0.00	$72.62
	12/4/2028	$45.15	$10.65	$9.75	$8.57	$0.00	$74.12
For apprentice rates see "Apprentice- LABORER"							
BLOCK PAVER, RAMMER / CURB SETTER (HEAVY & HIGHWAY) LABORERS LABORERS - ZONE 3 (HEAVY & HIGHWAY)	12/1/2025	$36.74	$10.65	$9.75	$6.56	$0.00	$63.70
	6/1/2026	$38.04	$10.65	$9.75	$6.56	$0.00	$65.00
	12/1/2026	$39.33	$10.65	$9.75	$6.56	$0.00	$66.29
For apprentice rates see "Apprentice- LABORER (Heavy and Highway)							
BOILER MAKER BOILERMAKERS LOCAL 29 BOILERMAKERS LOCAL 29	1/1/2024	$48.12	$7.07	$14.60	$6.00	$0.00	$75.79

Apprentice: BOILER MAKER

Effective Date: 1/1/2024

Step	Percent	Apprentice Base Wage	Health	Pension	Annuity	Supplemental Unemployment	Total Rate
1	65.00	$31.28	$7.07	$9.32	$3.90	$0.00	$51.57
2	65.00	$31.28	$7.07	$9.32	$3.90	$0.00	$51.57

Construction

Classification	Effective Date	Base Wage	Health	Pension	Annuity	Supplemental Unemployment	Total Rate

Apprentice: BOILER MAKER

Effective Date: 1/1/2024

Step	Percent	Apprentice Base Wage	Health	Pension	Annuity	Supplemental Unemployment	Total Rate
3	70.00	$33.68	$7.07	$10.03	$4.20	$0.00	$54.98
4	75.00	$36.09	$7.07	$10.74	$4.50	$0.00	$58.40
5	80.00	$38.50	$7.07	$11.45	$4.80	$0.00	$61.82
6	85.00	$40.90	$7.07	$12.18	$5.10	$0.00	$65.25
7	90.00	$43.31	$7.07	$12.88	$5.40	$0.00	$68.66
8	95.00	$45.71	$7.07	$13.62	$5.70	$0.00	$72.10

Apprentice to Journeyworker Ratio: 1:4

BRICK/STONE/ARTIFICIAL MASONRY (INCL. MASONRY WATERPROOFING) BRICKLAYERS LOCAL 3 BRICKLAYERS LOCAL 3 (SPRINGFIELD/PITTSFIELD)	2/1/2026	$56.36	$12.84	$15.57	$5.89	$0.00	$90.66
	8/1/2026	$58.56	$12.84	$15.57	$5.89	$0.00	$92.86
	2/1/2027	$59.96	$12.84	$15.57	$5.89	$0.00	$94.26

Apprentice: BRICK/STONE/ARTIFICIAL MASONRY (INCL. MASONRY WATERPROOFING)

Effective Date: 2/1/2026

Step	Percent	Apprentice Base Wage	Health	Pension	Annuity	Supplemental Unemployment	Total Rate
1	50.00	$28.18	$12.84	$15.57	$5.89	$0.00	$62.48
2	60.00	$33.82	$12.84	$15.57	$5.89	$0.00	$68.12
3	70.00	$39.45	$12.84	$15.57	$5.89	$0.00	$73.75
4	80.00	$45.09	$12.84	$15.57	$5.89	$0.00	$79.39
5	90.00	$50.72	$12.84	$15.57	$5.89	$0.00	$85.02

Apprentice: BRICK/STONE/ARTIFICIAL MASONRY (INCL. MASONRY WATERPROOFING)

Effective Date: 8/1/2026

Step	Percent	Apprentice Base Wage	Health	Pension	Annuity	Supplemental Unemployment	Total Rate
1	50.00	$29.28	$12.84	$15.57	$5.89	$0.00	$63.58
2	60.00	$35.14	$12.84	$15.57	$5.89	$0.00	$69.44
3	70.00	$40.99	$12.84	$15.57	$5.89	$0.00	$75.29
4	80.00	$46.85	$12.84	$15.57	$5.89	$0.00	$81.15
5	90.00	$52.70	$12.84	$15.57	$5.89	$0.00	$87.00

Apprentice to Journeyworker Ratio: 1:5

BULLDOZER/POWER SHOVEL/TREE SHREDDER /CLAM SHELL OPERATING ENGINEERS LOCAL 98 OPERATING ENGINEERS LOCAL 98	12/1/2023	$39.56	$13.78	$12.15	$3.00	$0.00	$68.49

For apprentice rates see "Apprentice- OPERATING ENGINEERS"

CAISSON & UNDERPINNING BOTTOM MAN LABORERS LABORERS - FOUNDATION AND MARINE	12/1/2025	$49.10	$10.65	$9.75	$9.80	$0.00	$79.30
	6/1/2026	$50.65	$10.65	$9.75	$9.80	$0.00	$80.85

Construction

Classification	Effective Date	Base Wage	Health	Pension	Annuity	Supplemental Unemployment	Total Rate
	12/1/2026	$52.15	$10.65	$9.75	$9.80	$0.00	$82.35
For apprentice rates see "Apprentice- LABORER"							
CAISSON & UNDERPINNING LABORER	12/1/2025	$47.95	$10.65	$9.75	$9.80	$0.00	$78.15
LABORERS	6/1/2026	$49.50	$10.65	$9.75	$9.80	$0.00	$79.70
LABORERS - FOUNDATION AND MARINE	12/1/2026	$51.00	$10.65	$9.75	$9.80	$0.00	$81.20
For apprentice rates see "Apprentice- LABORER"							
CAISSON & UNDERPINNING TOP MAN	12/1/2025	$48.28	$10.65	$9.75	$9.80	$0.00	$78.48
LABORERS	6/1/2026	$49.83	$10.65	$9.75	$9.80	$0.00	$80.03
LABORERS - FOUNDATION AND MARINE	12/1/2026	$51.33	$10.65	$9.75	$9.80	$0.00	$81.53
For apprentice rates see "Apprentice- LABORER"							
CARBIDE CORE DRILL OPERATOR	12/1/2025	$36.25	$10.65	$9.75	$8.57	$0.00	$65.22
LABORERS	6/1/2026	$37.55	$10.65	$9.75	$8.57	$0.00	$66.52
LABORERS - ZONE 3 (BUILDING & SITE)	12/7/2026	$38.85	$10.65	$9.75	$8.57	$0.00	$67.82
	6/7/2027	$40.25	$10.65	$9.75	$8.57	$0.00	$69.22
	12/6/2027	$41.65	$10.65	$9.75	$8.57	$0.00	$70.62
	6/5/2028	$43.15	$10.65	$9.75	$8.57	$0.00	$72.12
	12/4/2028	$44.65	$10.65	$9.75	$8.57	$0.00	$73.62
For apprentice rates see "Apprentice- LABORER"							
CARPENTER	9/1/2025	$43.54	$8.56	$11.25	$6.90	$0.00	$70.25
CARPENTERS	3/1/2026	$44.44	$8.56	$11.25	$6.90	$0.00	$71.15
CARPENTERS LOCAL 336 - HAMPDEN HAMPSHIRE FRANKLIN	9/1/2026	$45.39	$8.56	$11.25	$6.90	$0.00	$72.10
	3/1/2027	$46.29	$8.56	$11.25	$6.90	$0.00	$73.00

Apprentice: CARPENTER

Effective Date: 9/1/2025

Step	Percent	Apprentice Base Wage	Health	Pension	Annuity	Supplemental Unemployment	Total Rate
1	45.00	$19.59	$8.56	$0.00	$1.38	$0.00	$29.53
2	45.00	$19.59	$8.56	$0.00	$1.38	$0.00	$29.53
3	55.00	$23.95	$8.56	$0.00	$2.76	$0.00	$35.27
4	55.00	$23.95	$8.56	$0.00	$2.76	$0.00	$35.27
5	70.00	$30.48	$8.56	$11.25	$4.14	$0.00	$54.43
6	70.00	$30.48	$8.56	$11.25	$4.14	$0.00	$54.43
7	80.00	$34.83	$8.56	$11.25	$5.52	$0.00	$60.16
8	80.00	$34.83	$8.56	$11.25	$5.52	$0.00	$60.16

Apprentice: CARPENTER

Effective Date: 3/1/2026

Step	Percent	Apprentice Base Wage	Health	Pension	Annuity	Supplemental Unemployment	Total Rate
1	45.00	$20.00	$8.56	$0.00	$1.38	$0.00	$29.94
2	45.00	$20.00	$0.65	$0.00	$1.38	$0.00	$22.03
3	55.00	$24.44	$8.56	$0.00	$2.76	$0.00	$35.76

Construction

Classification	Effective Date	Base Wage	Health	Pension	Annuity	Supplemental Unemployment	Total Rate
CARPENTER WOOD FRAME	10/1/2025	$27.75	$7.02	$3.80	$1.00	$0.00	$39.57
CARPENTERS	10/1/2026	$28.85	$7.02	$3.80	$1.00	$0.00	$40.67
CARPENTERS-ZONE 3 (Wood Frame)							

All Aspects of New Wood Frame Work

Apprentice: CARPENTER

Effective Date: 3/1/2026

Step	Percent	Apprentice Base Wage	Health	Pension	Annuity	Supplemental Unemployment	Total Rate
4	55.00	$24.44	$8.56	$0.00	$2.76	$0.00	$35.76
5	70.00	$31.11	$8.56	$11.25	$4.14	$0.00	$55.06
6	70.00	$31.11	$8.56	$11.25	$4.14	$0.00	$55.06
7	80.00	$35.55	$8.56	$11.25	$5.52	$0.00	$60.88
8	80.00	$35.55	$8.56	$11.25	$5.52	$0.00	$60.88

Apprentice to Journeyworker Ratio: 1:5

Apprentice: CARPENTER WOOD FRAME

Effective Date: 10/1/2025

Step	Percent	Apprentice Base Wage	Health	Pension	Annuity	Supplemental Unemployment	Total Rate
1	60.00	$16.65	$7.02	$0.00	$0.00	$0.00	$23.67
2	60.00	$16.65	$7.02	$0.00	$0.00	$0.00	$23.67
3	65.00	$18.04	$7.02	$0.00	$1.00	$0.00	$26.06
4	70.00	$19.43	$7.02	$0.00	$1.00	$0.00	$27.45
5	75.00	$20.81	$7.02	$3.80	$1.00	$0.00	$32.63
6	80.00	$22.20	$7.02	$3.80	$1.00	$0.00	$34.02
7	85.00	$23.59	$7.02	$3.80	$1.00	$0.00	$35.41
8	90.00	$24.98	$7.02	$3.80	$1.00	$0.00	$36.80

Apprentice: CARPENTER WOOD FRAME

Effective Date: 10/1/2026

Step	Percent	Apprentice Base Wage	Health	Pension	Annuity	Supplemental Unemployment	Total Rate
1	60.00	$17.31	$7.02	$0.00	$0.00	$0.00	$24.33
2	60.00	$17.31	$7.02	$0.00	$0.00	$0.00	$24.33
3	65.00	$18.75	$7.02	$0.00	$1.00	$0.00	$26.77
4	70.00	$20.20	$7.02	$0.00	$1.00	$0.00	$28.22
5	75.00	$21.64	$7.02	$3.80	$1.00	$0.00	$33.46
6	80.00	$23.08	$7.02	$3.80	$1.00	$0.00	$34.90
7	85.00	$24.52	$7.02	$3.80	$1.00	$0.00	$36.34
8	90.00	$25.97	$7.02	$3.80	$1.00	$0.00	$37.79

Apprentice to Journeyworker Ratio: 1:5

CEMENT MASONRY/PLASTERING	1/1/2026	$48.13	$13.20	$16.30	$2.93	$1.69	$82.25
PLASTERERS AND CEMENT MASONS LOCAL 534	7/1/2026	$49.32	$13.20	$16.30	$2.93	$1.69	$83.44
Plasterers and Cement Masons - Zone 2	1/1/2027	$50.51	$13.20	$16.30	$2.93	$1.69	$84.63

Construction

Classification	Effective Date	Base Wage	Health	Pension	Annuity	Supplemental Unemployment	Total Rate
	7/1/2027	$51.70	$13.20	$16.30	$2.93	$1.69	$85.82
	1/1/2028	$52.89	$13.20	$16.30	$2.93	$1.69	$87.01

Apprentice: CEMENT MASONRY/PLASTERING

Effective Date: 1/1/2026

Step	Percent	Apprentice Base Wage	Health	Pension	Annuity	Supplemental Unemployment	Total Rate
1	50.00	$24.07	$13.20	$16.30	$0.00	$0.00	$53.57
2	60.00	$28.88	$13.20	$16.30	$2.93	$1.69	$63.00
3	65.00	$31.28	$13.20	$16.30	$2.93	$1.69	$65.40
4	70.00	$33.69	$13.20	$16.30	$2.93	$1.69	$67.81
5	75.00	$36.10	$13.20	$16.30	$2.93	$1.69	$70.22
6	80.00	$38.50	$13.20	$16.30	$2.93	$1.69	$72.62
7	90.00	$43.32	$13.20	$16.30	$2.93	$1.69	$77.44

Apprentice: CEMENT MASONRY/PLASTERING

Effective Date: 7/1/2026

Step	Percent	Apprentice Base Wage	Health	Pension	Annuity	Supplemental Unemployment	Total Rate
1	50.00	$24.66	$13.20	$16.30	$0.00	$0.00	$54.16
2	60.00	$29.59	$13.20	$16.30	$2.93	$1.69	$63.71
3	65.00	$32.06	$13.20	$16.30	$2.93	$1.69	$66.18
4	70.00	$34.52	$13.20	$16.30	$2.93	$1.69	$68.64
5	75.00	$36.99	$13.20	$16.30	$2.93	$1.69	$71.11
6	80.00	$39.46	$13.20	$16.30	$2.93	$1.69	$73.58
7	90.00	$44.39	$13.20	$16.30	$2.93	$0.00	$76.82

Apprentice to Journeyworker Ratio: 1:5

CHAIN SAW OPERATOR LABORERS LABORERS - ZONE 3 (BUILDING & SITE)	12/1/2025	$36.25	$10.65	$9.75	$8.57	$0.00	$65.22
	6/1/2026	$37.55	$10.65	$9.75	$8.57	$0.00	$66.52
	12/7/2026	$38.85	$10.65	$9.75	$8.57	$0.00	$67.82
	6/7/2027	$40.25	$10.65	$9.75	$8.57	$0.00	$69.22
	12/6/2027	$41.65	$10.65	$9.75	$8.57	$0.00	$70.62
	6/5/2028	$43.15	$10.65	$9.75	$8.57	$0.00	$72.12
	12/4/2028	$44.65	$10.65	$9.75	$8.57	$0.00	$73.62
For apprentice rates see "Apprentice- LABORER"							
COMPRESSOR OPERATOR OPERATING ENGINEERS LOCAL 98 OPERATING ENGINEERS LOCAL 98	12/1/2023	$39.03	$13.78	$12.15	$3.00	$0.00	$67.96
For apprentice rates see "Apprentice- OPERATING ENGINEERS"							
CRANE OPERATOR OPERATING ENGINEERS LOCAL 98 OPERATING ENGINEERS LOCAL 98	12/1/2023	$43.06	$13.78	$12.15	$3.00	$0.00	$71.99
For apprentice rates see "Apprentice- OPERATING ENGINEERS"							
DELEADER (BRIDGE)	1/1/2026	$59.56	$10.35	$12.00	$12.60	$0.00	$94.51

Construction

Classification	Effective Date	Base Wage	Health	Pension	Annuity	Supplemental Unemployment	Total Rate
PAINTERS LOCAL 35 PAINTERS LOCAL 35 - ZONE 3							

Apprentice: DELEADER (BRIDGE)

Effective Date: 1/1/2026

Step	Percent	Apprentice Base Wage	Health	Pension	Annuity	Supplemental Unemployment	Total Rate
1	50.00	$29.78	$10.35	$0.00	$0.00	$0.00	$40.13
2	55.00	$32.76	$10.35	$0.00	$6.93	$0.00	$50.04
3	60.00	$35.74	$10.35	$0.00	$7.56	$0.00	$53.65
4	65.00	$38.71	$10.35	$0.00	$8.19	$0.00	$57.25
5	70.00	$41.69	$10.35	$12.00	$8.82	$0.00	$72.86
6	75.00	$44.67	$10.35	$12.00	$9.45	$0.00	$76.47
7	80.00	$47.65	$10.35	$12.00	$10.08	$0.00	$80.08
8	90.00	$53.60	$10.35	$12.00	$11.34	$0.00	$87.29

Apprentice to Journeyworker Ratio: 1:1

DEMO: ADZEMAN LABORERS LABORERS - ZONE 3 (BUILDING & SITE)	12/1/2025	$48.00	$10.65	$9.75	$9.65	$0.00	$78.05
	6/1/2026	$49.55	$10.65	$9.75	$9.65	$0.00	$79.60
	12/7/2026	$51.05	$10.65	$9.75	$9.65	$0.00	$81.10
	6/7/2027	$52.65	$10.65	$9.75	$9.65	$0.00	$82.70
	12/6/2027	$54.25	$10.65	$9.75	$9.65	$0.00	$84.30
	6/5/2028	$55.93	$10.65	$9.75	$9.65	$0.00	$85.98
	12/4/2028	$57.60	$10.65	$9.75	$9.65	$0.00	$87.65
For apprentice rates see "Apprentice- LABORER"							
DEMO: BACKHOE/LOADER/HAMMER OPERATOR LABORERS LABORERS - ZONE 3 (BUILDING & SITE)	12/1/2025	$49.00	$10.65	$9.75	$9.65	$0.00	$79.05
	6/1/2026	$50.55	$10.65	$9.75	$9.65	$0.00	$80.60
	12/7/2026	$52.05	$10.65	$9.75	$9.65	$0.00	$82.10
	6/7/2027	$53.65	$10.65	$9.75	$9.65	$0.00	$83.70
	12/6/2027	$55.25	$10.65	$9.75	$9.65	$0.00	$85.30
	6/5/2028	$56.93	$10.65	$9.75	$9.65	$0.00	$86.98
	12/4/2028	$58.60	$10.65	$9.75	$9.65	$0.00	$88.65
For apprentice rates see "Apprentice- LABORER"							
DEMO: BURNERS LABORERS LABORERS - ZONE 3 (BUILDING & SITE)	12/1/2025	$48.75	$10.65	$9.75	$9.65	$0.00	$78.80
	6/1/2026	$50.30	$10.65	$9.75	$9.65	$0.00	$80.35
	12/7/2026	$51.80	$10.65	$9.75	$9.65	$0.00	$81.85
	6/7/2027	$53.40	$10.65	$9.75	$9.65	$0.00	$83.45
	12/6/2027	$55.00	$10.65	$9.75	$9.65	$0.00	$85.05
	6/5/2028	$56.68	$10.65	$9.75	$9.65	$0.00	$86.73
	12/4/2028	$58.35	$10.65	$9.75	$9.65	$0.00	$88.40
For apprentice rates see "Apprentice- LABORER"							
DEMO: CONCRETE CUTTER/SAWYER LABORERS LABORERS - ZONE 3 (BUILDING & SITE)	12/1/2025	$49.00	$10.65	$9.75	$9.65	$0.00	$79.05
	6/1/2026	$50.55	$10.65	$9.75	$9.65	$0.00	$80.60
	12/7/2026	$52.05	$10.65	$9.75	$9.65	$0.00	$82.10
	6/7/2027	$53.65	$10.65	$9.75	$9.65	$0.00	$83.70
	12/6/2027	$55.25	$10.65	$9.75	$9.65	$0.00	$85.30

Construction

Classification	Effective Date	Base Wage	Health	Pension	Annuity	Supplemental Unemployment	Total Rate
	6/5/2028	$56.93	$10.65	$9.75	$9.65	$0.00	$86.98
	12/4/2028	$58.60	$10.65	$9.75	$9.65	$0.00	$88.65
For apprentice rates see "Apprentice- LABORER"							
DEMO: JACKHAMMER OPERATOR	12/1/2025	$48.75	$10.65	$9.75	$9.65	$0.00	$78.80
LABORERS	6/1/2026	$50.30	$10.65	$9.75	$9.65	$0.00	$80.35
LABORERS - ZONE 3 (BUILDING & SITE)	12/7/2026	$51.80	$10.65	$9.75	$9.65	$0.00	$81.85
	6/7/2027	$53.40	$10.65	$9.75	$9.65	$0.00	$83.45
	12/6/2027	$55.00	$10.65	$9.75	$9.65	$0.00	$85.05
	6/5/2028	$56.68	$10.65	$9.75	$9.65	$0.00	$86.73
	12/4/2028	$58.35	$10.65	$9.75	$9.65	$0.00	$88.40
For apprentice rates see "Apprentice- LABORER"							
DEMO: WRECKING LABORER	12/1/2025	$48.00	$10.65	$9.75	$9.65	$0.00	$78.05
LABORERS	6/1/2026	$49.55	$10.65	$9.75	$9.65	$0.00	$79.60
LABORERS - ZONE 3 (BUILDING & SITE)	12/7/2026	$51.05	$10.65	$9.75	$9.65	$0.00	$81.10
	6/7/2027	$52.65	$10.65	$9.75	$9.65	$0.00	$82.70
	12/6/2027	$54.25	$10.65	$9.75	$9.65	$0.00	$84.30
	6/5/2028	$55.93	$10.65	$9.75	$9.65	$0.00	$85.98
	12/4/2028	$57.60	$10.65	$9.75	$9.65	$0.00	$87.65
For apprentice rates see "Apprentice- LABORER"							
DIVER	8/1/2024	$78.11	$10.08	$11.62	$12.67	$0.00	$112.48
PILE DRIVER LOCAL 56							
PILE DRIVER LOCAL 56 (ZONE 3)							
as of 8-1-24, Apprentices with diving licenses begin at second year. % of Diver wage 70/80/90 2A $69.83, 3A $91.79,4A $102.14 Total Rate							
DIVER TENDER	8/1/2024	$49.19	$10.08	$11.62	$12.67	$0.00	$83.56
PILE DRIVER LOCAL 56							
PILE DRIVER LOCAL 56 (ZONE 3)							
as of 8-1-24, Apprentices with diving licenses begin at second year. % of Piledriver wage 70/80/90 2A $54.20, 3A $73.93,4A $82.05 Total Rate							
DIVER TENDER (EFFLUENT)	8/1/2024	$83.69	$10.08	$11.62	$12.67	$0.00	$118.06
PILE DRIVER LOCAL 56							
PILE DRIVER LOCAL 56 (ZONE 3)							
For apprentice rates see "Apprentice- PILE DRIVER"							
DIVER/SLURRY (EFFLUENT)	8/1/2024	$117.16	$10.08	$11.62	$12.67	$0.00	$151.53
PILE DRIVER LOCAL 56							
PILE DRIVER LOCAL 56 (ZONE 3)							
For apprentice rates see "Apprentice- PILE DRIVER"							
DRAWBRIDGE OPERATOR (Construction)	7/1/2020	$26.77	$6.67	$3.93	$0.00	$0.16	$37.53
DRAWBRIDGE - SEIU LOCAL 888							
DRAWBRIDGE - SEIU LOCAL 888							
ELECTRICIAN (Including Core Drilling)	12/28/2025	$53.26	$13.75	$8.40	$6.96	$0.00	$82.37
ELECTRICIANS LOCAL 7	6/28/2026	$54.41	$14.00	$8.43	$7.03	$0.00	$83.87
ELECTRICIANS LOCAL 7	1/3/2027	$55.56	$14.25	$8.47	$7.09	$0.00	$85.37

Construction

Classification	Effective Date	Base Wage	Health	Pension	Annuity	Supplemental Unemployment	Total Rate

Apprentice: ELECTRICIAN (Including Core Drilling)

Effective Date: 12/28/2025

Step	Percent	Apprentice Base Wage	Health	Pension	Annuity	Supplemental Unemployment	Total Rate
1	40.00	$21.30	$7.65	$0.63	$0.00	$0.00	$29.58
2	45.00	$23.97	$7.65	$0.70	$0.00	$0.00	$32.32
3	50.00	$26.63	$13.75	$7.53	$0.00	$0.00	$47.91
4	55.00	$29.29	$13.75	$7.61	$0.00	$0.00	$50.65
5	65.00	$34.62	$13.75	$9.84	$0.00	$0.00	$58.21
6	70.00	$37.28	$13.75	$11.30	$0.00	$0.00	$62.33

Apprentice: ELECTRICIAN (Including Core Drilling)

Effective Date: 6/28/2026

Step	Percent	Apprentice Base Wage	Health	Pension	Annuity	Supplemental Unemployment	Total Rate
1	40.00	$21.76	$7.80	$0.63	$0.00	$0.00	$30.19
2	45.00	$24.48	$7.80	$0.70	$0.00	$0.00	$32.98
3	50.00	$27.21	$14.00	$7.53	$0.00	$0.00	$48.74
4	55.00	$29.93	$14.00	$7.61	$0.00	$0.00	$51.54
5	65.00	$35.37	$14.00	$9.84	$0.00	$0.00	$59.21
6	70.00	$38.09	$14.00	$11.30	$0.00	$0.00	$63.39

Apprentice to Journeyworker Ratio: 2:3

ELEVATOR CONSTRUCTOR	1/1/2026	$69.23	$16.38	$11.06	$10.70	$0.00	$107.37
ELEVATOR CONSTRUCTORS LOCAL 41	1/1/2027	$72.23	$16.48	$11.16	$11.00	$0.00	$110.87
ELEVATOR CONSTRUCTORS LOCAL 41							

Apprentice: ELEVATOR CONSTRUCTOR

Effective Date: 1/1/2026

Step	Percent	Apprentice Base Wage	Health	Pension	Annuity	Supplemental Unemployment	Total Rate
1	50.00	$34.62	$16.38	$0.00	$0.00	$0.00	$51.00
2	55.00	$38.08	$16.38	$11.06	$10.70	$0.00	$76.22
3	65.00	$45.00	$16.38	$11.06	$10.70	$0.00	$83.14
4	70.00	$48.46	$16.38	$11.06	$10.70	$0.00	$86.60
5	80.00	$55.38	$16.38	$11.06	$10.70	$0.00	$93.52

Apprentice: ELEVATOR CONSTRUCTOR

Effective Date: 1/1/2027

Step	Percent	Apprentice Base Wage	Health	Pension	Annuity	Supplemental Unemployment	Total Rate
1	50.00	$36.12	$16.48	$0.00	$0.00	$0.00	$52.60
2	55.00	$39.73	$16.48	$11.16	$11.00	$0.00	$78.37
3	65.00	$46.95	$16.48	$11.16	$11.00	$0.00	$85.59

Construction

Classification	Effective Date	Base Wage	Health	Pension	Annuity	Supplemental Unemployment	Total Rate
Apprentice: ELEVATOR CONSTRUCTOR							
Effective Date: 1/1/2027							
Step / Percent		**Apprentice Base Wage**					
4 / 70.00		$50.56	$16.48	$11.16	$11.00	$0.00	$89.20
5 / 80.00		$57.78	$16.48	$11.16	$11.00	$0.00	$96.42
Apprentice to Journeyworker Ratio: 1:1							
ELEVATOR CONSTRUCTOR HELPER	1/1/2026	$48.46	$16.38	$11.06	$10.70	$0.00	$86.60
ELEVATOR CONSTRUCTORS LOCAL 41	1/1/2027	$50.56	$16.48	$11.16	$11.00	$0.00	$89.20
ELEVATOR CONSTRUCTORS LOCAL 41							
For apprentice rates see "Apprentice - ELEVATOR CONSTRUCTOR"							
FENCE & GUARD RAIL ERECTOR (HEAVY & HIGHWAY)	12/1/2025	$36.24	$10.65	$9.75	$6.56	$0.00	$63.20
LABORERS	6/1/2026	$37.54	$10.65	$9.75	$6.56	$0.00	$64.50
LABORERS - ZONE 3 (HEAVY & HIGHWAY)	12/1/2026	$38.83	$10.65	$9.75	$6.56	$0.00	$65.79
For apprentice rates see "Apprentice- LABORER (Heavy and Highway)"							
FIELD ENG.INST/ROD-BLDG,SITE,HVY/HWY	6/1/1999	$18.84	$4.80	$4.10	$0.00	$0.00	$27.74
OPERATING ENGINEERS LOCAL 98							
OPERATING ENGINEERS LOCAL 98							
FIELD ENG.PARTY CHIEF:BLDG,SITE,HVY/HWY	6/1/1999	$21.33	$4.80	$4.10	$0.00	$0.00	$30.23
OPERATING ENGINEERS LOCAL 98							
OPERATING ENGINEERS LOCAL 98							
FIELD ENG.SURVEY CHIEF-BLDG,SITE,HVY/HWY	6/1/1999	$22.33	$4.80	$4.10	$0.00	$0.00	$31.23
OPERATING ENGINEERS LOCAL 98							
OPERATING ENGINEERS LOCAL 98							
FIRE ALARM INSTALLER	12/28/2025	$53.26	$13.75	$8.40	$6.96	$0.00	$82.37
ELECTRICIANS LOCAL 7	6/28/2026	$54.41	$14.00	$8.43	$7.03	$0.00	$83.87
ELECTRICIANS LOCAL 7	1/3/2027	$55.56	$14.25	$8.47	$7.09	$0.00	$85.37
For apprentice rates see "Apprentice- ELECTRICIAN"							
FIRE ALARM REPAIR / MAINTENANCE	12/28/2025	$53.26	$13.75	$8.40	$6.96	$0.00	$82.37
/ COMMISSIONING	6/28/2026	$54.41	$14.00	$8.43	$7.03	$0.00	$83.87
ELECTRICIANS LOCAL 7	1/3/2027	$55.56	$14.25	$8.47	$7.09	$0.00	$85.37
ELECTRICIANS LOCAL 7							
For apprentice rates see "Apprentice- TELECOMMUNICATIONS TECHNICIAN"							
FIREMAN	12/1/2023	$39.03	$13.78	$12.15	$3.00	$0.00	$67.96
OPERATING ENGINEERS LOCAL 98							
OPERATING ENGINEERS LOCAL 98							
Apprentice: FIREMAN							
Effective Date: 12/1/2023							
Step / Percent		**Apprentice Base Wage**					

Construction

Classification	Effective Date	Base Wage	Health	Pension	Annuity	Supplemental Unemployment	Total Rate

Apprentice: FIREMAN

Effective Date: 12/1/2023

Step	Percent	Apprentice Base Wage	Health	Pension	Annuity	Supplemental Unemployment	Total Rate
1	60.00	$23.42	$13.78	$12.15	$3.00	$0.00	$52.35
2	70.00	$27.32	$13.78	$12.15	$3.00	$0.00	$56.25
3	80.00	$31.22	$13.78	$12.15	$3.00	$0.00	$60.15
4	90.00	$35.13	$13.78	$12.15	$3.00	$0.00	$64.06

Apprentice to Journeyworker Ratio: 1:6

FLAGGER & SIGNALER (HEAVY & HIGHWAY)	12/1/2025	$28.09	$10.65	$9.75	$6.56	$0.00	$55.05
LABORERS LABORERS - ZONE 3 (HEAVY & HIGHWAY)	6/1/2026	$29.21	$10.65	$9.75	$6.56	$0.00	$56.17
	12/1/2026	$29.21	$10.65	$9.75	$6.56	$0.00	$56.17
For apprentice rates see "Apprentice- LABORER (Heavy and Highway)							

FLOORCOVERER FLOORCOVERERS LOCAL 2168 FLOORCOVERERS LOCAL 2168 ZONE III	9/1/2025	$43.44	$8.56	$11.25	$6.90	$0.00	$70.15
	3/1/2026	$44.34	$8.56	$11.25	$6.90	$0.00	$71.05
	9/1/2026	$45.29	$8.56	$11.25	$6.90	$0.00	$72.00
	3/1/2027	$46.19	$8.56	$11.25	$6.90	$0.00	$72.90

Apprentice: FLOORCOVERER

Effective Date: 9/1/2025

Step	Percent	Apprentice Base Wage	Health	Pension	Annuity	Supplemental Unemployment	Total Rate
1	45.00	$19.55	$8.56	$0.00	$1.38	$0.00	$29.49
2	45.00	$19.55	$8.56	$0.00	$1.38	$0.00	$29.49
3	55.00	$23.89	$8.56	$0.00	$2.76	$0.00	$35.21
4	55.00	$23.89	$8.56	$0.00	$2.76	$0.00	$35.21
5	70.00	$30.41	$8.56	$11.25	$4.14	$0.00	$54.36
6	70.00	$30.41	$8.56	$11.25	$4.14	$0.00	$54.36
7	80.00	$34.75	$8.56	$11.25	$5.52	$0.00	$60.08
8	80.00	$34.75	$8.56	$11.25	$5.52	$0.00	$60.08

Apprentice: FLOORCOVERER

Effective Date: 3/1/2026

Step	Percent	Apprentice Base Wage	Health	Pension	Annuity	Supplemental Unemployment	Total Rate
1	45.00	$19.95	$8.56	$0.00	$1.38	$0.00	$29.89
2	45.00	$19.95	$8.56	$0.00	$1.38	$0.00	$29.89
3	55.00	$24.39	$8.56	$0.00	$2.76	$0.00	$35.71
4	55.00	$24.39	$8.56	$0.00	$2.76	$0.00	$35.71
5	70.00	$31.04	$8.56	$11.25	$4.14	$0.00	$54.99
6	70.00	$31.04	$8.56	$11.25	$4.14	$0.00	$54.99
7	80.00	$35.47	$8.56	$11.25	$5.52	$0.00	$60.80
8	80.00	$35.47	$8.56	$11.25	$5.52	$0.00	$60.80

Construction

Classification	Effective Date	Base Wage	Health	Pension	Annuity	Supplemental Unemployment	Total Rate
Apprentice Notes Steps are 750 hrs.							
Apprentice to Journeyworker Ratio: 1:1							
FORK LIFT OPERATING ENGINEERS LOCAL 98 OPERATING ENGINEERS LOCAL 98 For apprentice rates see "Apprentice- OPERATING ENGINEERS"	12/1/2023	$39.25	$13.78	$12.15	$3.00	$0.00	$68.18
GENERATORS/LIGHTING PLANTS OPERATING ENGINEERS LOCAL 98 OPERATING ENGINEERS LOCAL 98 For apprentice rates see "Apprentice- OPERATING ENGINEERS"	12/1/2023	$35.80	$13.78	$12.15	$3.00	$0.00	$64.73
GLAZIER (GLASS PLANK/AIR BARRIER/INTERIOR SYSTEMS) GLAZIERS LOCAL 1333 GLAZIERS LOCAL 1333	6/1/2025	$43.13	$10.80	$8.25	$5.50	$0.00	$67.68
	6/1/2026	$44.73	$11.20	$8.40	$6.05	$0.00	$70.38
	6/1/2027	$46.73	$11.60	$8.55	$6.60	$0.00	$73.48
	6/1/2028	$48.73	$12.00	$8.70	$7.20	$0.00	$76.63

Apprentice: GLAZIER (GLASS PLANK/AIR BARRIER/INTERIOR SYSTEMS)

Effective Date: 6/1/2025

Step	Percent	Apprentice Base Wage	Health	Pension	Annuity	Supplemental Unemployment	Total Rate
1	50.00	$21.57	$10.80	$8.25	$5.50	$0.00	$46.12
2	56.25	$24.26	$10.80	$8.25	$5.50	$0.00	$48.81
3	62.50	$26.96	$10.80	$8.25	$5.50	$0.00	$51.51
4	68.75	$29.65	$10.80	$8.25	$5.50	$0.00	$54.20
5	75.00	$32.35	$10.80	$8.25	$5.50	$0.00	$56.90
6	81.25	$35.04	$10.80	$8.25	$5.50	$0.00	$59.59
7	87.50	$37.74	$10.80	$8.25	$5.50	$0.00	$62.29
8	93.75	$40.43	$10.80	$8.25	$5.50	$0.00	$64.98

Apprentice: GLAZIER (GLASS PLANK/AIR BARRIER/INTERIOR SYSTEMS)

Effective Date: 6/1/2026

Step	Percent	Apprentice Base Wage	Health	Pension	Annuity	Supplemental Unemployment	Total Rate
1	50.00	$22.37	$11.20	$8.40	$6.05	$0.00	$48.02
2	56.25	$25.16	$11.20	$8.40	$6.05	$0.00	$50.81
3	62.50	$27.96	$11.20	$8.40	$6.05	$0.00	$53.61
4	68.75	$30.75	$11.20	$8.40	$6.05	$0.00	$56.40
5	75.00	$33.55	$11.20	$8.40	$6.05	$0.00	$59.20
6	81.25	$36.34	$11.20	$8.40	$6.05	$0.00	$61.99
7	87.50	$39.14	$11.20	$8.40	$6.05	$0.00	$64.79
8	93.75	$41.93	$11.20	$8.40	$6.05	$0.00	$67.58

Apprentice to Journeyworker Ratio: 3:1

Construction

Classification	Effective Date	Base Wage	Health	Pension	Annuity	Supplemental Unemployment	Total Rate
GRADER/TRENCHING MACHINE/DERRICK OPERATING ENGINEERS LOCAL 98 OPERATING ENGINEERS LOCAL 98	12/1/2023	$39.56	$13.78	$12.15	$3.00	$0.00	$68.49
For apprentice rates see "Apprentice- OPERATING ENGINEERS"							
HVAC (DUCTWORK) SHEETMETAL WORKERS LOCAL 63 SHEETMETAL WORKERS LOCAL 63	7/1/2025	$43.48	$12.94	$11.01	$8.72	$2.13	$78.28
	7/1/2026	$43.48	$13.24	$11.01	$9.92	$2.13	$79.78
	1/1/2027	$43.48	$13.54	$11.01	$11.12	$2.13	$81.28
	7/1/2027	$44.98	$13.54	$11.01	$11.12	$2.13	$82.78
	1/1/2028	$46.48	$13.54	$11.01	$11.12	$2.13	$84.28
For apprentice rates see "Apprentice- SHEET METAL WORKER"							
HVAC (ELECTRICAL CONTROLS) ELECTRICIANS LOCAL 7 ELECTRICIANS LOCAL 7	12/28/2025	$53.26	$13.75	$8.40	$6.96	$0.00	$82.37
	6/28/2026	$54.41	$14.00	$8.43	$7.03	$0.00	$83.87
	1/3/2027	$55.56	$14.25	$8.47	$7.09	$0.00	$85.37
For apprentice rates see "Apprentice- ELECTRICIAN"							
HVAC (TESTING AND BALANCING - AIR) SHEETMETAL WORKERS LOCAL 63 SHEETMETAL WORKERS LOCAL 63	7/1/2025	$43.48	$12.94	$11.01	$8.72	$2.13	$78.28
	7/1/2026	$43.48	$13.24	$11.01	$9.92	$2.13	$79.78
	1/1/2027	$43.48	$13.54	$11.01	$11.12	$2.13	$81.28
	7/1/2027	$44.98	$13.54	$11.01	$11.12	$2.13	$82.78
	1/1/2028	$46.48	$13.54	$11.01	$11.12	$2.13	$84.28
For apprentice rates see "Apprentice- SHEET METAL WORKER"							
HVAC (TESTING AND BALANCING -WATER) PLUMBERS & PIPEFITTERS LOCAL 104 PLUMBERS & PIPEFITTERS LOCAL 104	9/17/2025	$52.26	$12.00	$10.85	$7.10	$0.00	$82.21
	3/17/2026	$54.26	$12.00	$10.85	$7.10	$0.00	$84.21
	9/17/2026	$56.26	$12.00	$10.85	$7.10	$0.00	$86.21
	3/17/2027	$58.26	$12.00	$10.85	$7.10	$0.00	$88.21
	9/17/2027	$60.26	$12.00	$10.85	$7.10	$0.00	$90.21
	3/17/2028	$62.26	$12.00	$10.85	$7.10	$0.00	$92.21
	9/17/2028	$64.26	$12.00	$10.85	$7.10	$0.00	$94.21
	3/17/2029	$66.26	$12.00	$10.85	$7.10	$0.00	$96.21
For apprentice rates see "Apprentice- PIPEFITTER" or "PLUMBER/PIPEFITTER"							
HVAC MECHANIC PLUMBERS & PIPEFITTERS LOCAL 104 PLUMBERS & PIPEFITTERS LOCAL 104	9/17/2025	$52.26	$12.00	$10.85	$7.10	$0.00	$82.21
	3/17/2026	$54.26	$12.00	$10.85	$7.10	$0.00	$84.21
	9/17/2026	$56.26	$12.00	$10.85	$7.10	$0.00	$86.21
	3/17/2027	$58.26	$12.00	$10.85	$7.10	$0.00	$88.21
	9/17/2027	$60.26	$12.00	$10.85	$7.10	$0.00	$90.21
	3/17/2028	$62.26	$12.00	$10.85	$7.10	$0.00	$92.21
	9/17/2028	$64.26	$12.00	$10.85	$7.10	$0.00	$94.21
	3/17/2029	$66.26	$12.00	$10.85	$7.10	$0.00	$96.21
For apprentice rates see "Apprentice- PIPEFITTER" or "PLUMBER/PIPEFITTER"							
HYDRAULIC DRILLS (HEAVY & HIGHWAY) LABORERS LABORERS - ZONE 3 (HEAVY & HIGHWAY)	12/1/2025	$36.74	$10.65	$9.75	$6.56	$0.00	$63.70
	6/1/2026	$38.04	$10.65	$9.75	$6.56	$0.00	$65.00
	12/1/2026	$39.33	$10.65	$9.75	$6.56	$0.00	$66.29
For apprentice rates see "Apprentice- LABORER (Heavy and Highway)							
INSULATOR (PIPES & TANKS) HEAT & FROST INSULATORS LOCAL 6	9/1/2025	$48.27	$14.75	$9.52	$10.09	$0.00	$82.63
	9/1/2026	$51.01	$14.75	$9.52	$10.09	$0.00	$85.37

Construction

Classification	Effective Date	Base Wage	Health	Pension	Annuity	Supplemental Unemployment	Total Rate
HEAT & FROST INSULATORS LOCAL 6 (SPRINGFIELD)							

Apprentice: INSULATOR (PIPES & TANKS)

Effective Date: 9/1/2025

Step	Percent	Apprentice Base Wage	Health	Pension	Annuity	Supplemental Unemployment	Total Rate
1	50.00	$24.14	$14.75	$9.27	$5.05	$0.00	$53.21
2	60.00	$28.96	$14.75	$9.32	$6.05	$0.00	$59.08
3	70.00	$33.79	$14.75	$9.37	$7.06	$0.00	$64.97
4	80.00	$38.62	$14.75	$9.42	$8.07	$0.00	$70.86

Apprentice: INSULATOR (PIPES & TANKS)

Effective Date: 9/1/2026

Step	Percent	Apprentice Base Wage	Health	Pension	Annuity	Supplemental Unemployment	Total Rate
1	50.00	$25.51	$14.75	$9.27	$5.05	$0.00	$54.58
2	60.00	$30.61	$14.75	$9.32	$6.05	$0.00	$60.73
3	70.00	$35.71	$14.75	$9.37	$7.06	$0.00	$66.89
4	80.00	$40.81	$14.75	$9.42	$8.07	$0.00	$73.05

Apprentice to Journeyworker Ratio: 1:4

IRONWORKER/WELDER IRONWORKERS LOCAL 7 IRONWORKERS LOCAL 7 (SPRINGFIELD AREA)	3/16/2024	$40.66	$8.25	$12.70	$10.00	$0.00	$71.61

Apprentice: IRONWORKER/WELDER

Effective Date: 3/16/2024

Step	Percent	Apprentice Base Wage	Health	Pension	Annuity	Supplemental Unemployment	Total Rate
1	60.00	$24.40	$8.25	$12.70	$10.00	$0.00	$55.35
2	70.00	$28.46	$8.25	$12.70	$10.00	$0.00	$59.41
3	75.00	$30.50	$8.25	$12.70	$10.00	$0.00	$61.45
4	80.00	$32.53	$8.25	$12.70	$10.00	$0.00	$63.48
5	85.00	$34.56	$8.25	$12.70	$10.00	$0.00	$65.51
6	90.00	$36.59	$8.25	$12.70	$10.00	$0.00	$67.54

Apprentice to Journeyworker Ratio: 1:4

JACKHAMMER & PAVING BREAKER OPERATOR LABORERS LABORERS - ZONE 3 (BUILDING & SITE)	12/1/2025	$36.25	$10.65	$9.75	$8.57	$0.00	$65.22
	6/1/2026	$37.55	$10.65	$9.75	$8.57	$0.00	$66.52
	12/7/2026	$38.85	$10.65	$9.75	$8.57	$0.00	$67.82
	6/7/2027	$40.25	$10.65	$9.75	$8.57	$0.00	$69.22
	12/6/2027	$41.65	$10.65	$9.75	$8.57	$0.00	$70.62
	6/5/2028	$43.15	$10.65	$9.75	$8.57	$0.00	$72.12
	12/4/2028	$44.65	$10.65	$9.75	$8.57	$0.00	$73.62

For apprentice rates see "Apprentice- LABORER"

Construction

Classification	Effective Date	Base Wage	Health	Pension	Annuity	Supplemental Unemployment	Total Rate
LABORER	12/1/2025	$36.00	$10.65	$9.75	$8.57	$0.00	$64.97
LABORERS	6/1/2026	$37.30	$10.65	$9.75	$8.57	$0.00	$66.27
LABORERS - ZONE 3 (BUILDING & SITE)	12/7/2026	$38.60	$10.65	$9.75	$8.57	$0.00	$67.57
	6/7/2027	$40.00	$10.65	$9.75	$8.57	$0.00	$68.97
	12/6/2027	$41.40	$10.65	$9.75	$8.57	$0.00	$70.37
	6/5/2028	$42.90	$10.65	$9.75	$8.57	$0.00	$71.87
	12/4/2028	$44.40	$10.65	$9.75	$8.57	$0.00	$73.37

Apprentice: LABORER

Effective Date: 12/1/2025

Step	Percent	Apprentice Base Wage	Health	Pension	Annuity	Supplemental Unemployment	Total Rate
1	60.00	$22.05	$9.90	$9.25	$8.32	$0.00	$49.52
2	70.00	$25.73	$9.90	$9.25	$8.32	$0.00	$53.20
3	80.00	$29.40	$9.90	$9.25	$8.32	$0.00	$56.87
4	90.00	$33.08	$9.90	$9.25	$8.32	$0.00	$60.55

Apprentice: LABORER

Effective Date: 6/1/2026

Step	Percent	Apprentice Base Wage	Health	Pension	Annuity	Supplemental Unemployment	Total Rate
1	60.00	$22.38	$10.65	$9.75	$8.57	$0.00	$51.35
2	70.00	$26.11	$10.65	$9.75	$8.57	$0.00	$55.08
3	80.00	$29.84	$10.65	$9.75	$8.57	$0.00	$58.81
4	90.00	$33.57	$10.65	$9.75	$8.57	$0.00	$62.54

Apprentice to Journeyworker Ratio: 1:5

Classification	Effective Date	Base Wage	Health	Pension	Annuity	Supplemental Unemployment	Total Rate
LABORER (HEAVY & HIGHWAY)	12/1/2025	$35.99	$10.65	$9.75	$6.56	$0.00	$62.95
LABORERS	6/1/2026	$37.29	$10.65	$9.75	$6.56	$0.00	$64.25
LABORERS - ZONE 3 (HEAVY & HIGHWAY)	12/1/2026	$38.58	$10.65	$9.75	$6.56	$0.00	$65.54

Apprentice: LABORER (HEAVY & HIGHWAY)

Effective Date: 12/1/2025

Step	Percent	Apprentice Base Wage	Health	Pension	Annuity	Supplemental Unemployment	Total Rate
1	60.00	$22.04	$9.90	$9.25	$6.31	$0.00	$47.50
2	70.00	$25.72	$9.90	$9.25	$6.31	$0.00	$51.18
3	80.00	$29.40	$9.90	$9.25	$6.31	$0.00	$54.86
4	90.00	$33.07	$9.90	$9.25	$6.31	$0.00	$58.53

Apprentice: LABORER (HEAVY & HIGHWAY)

Effective Date: 6/1/2026

Step	Percent	Apprentice Base Wage	Health	Pension	Annuity	Supplemental Unemployment	Total Rate

Construction

Classification	Effective Date	Base Wage	Health	Pension	Annuity	Supplemental Unemployment	Total Rate

Apprentice: LABORER (HEAVY & HIGHWAY)

Effective Date: 6/1/2026

Step	Percent	Apprentice Base Wage	Health	Pension	Annuity	Supplemental Unemployment	Total Rate
1	60.00	$22.37	$10.65	$9.75	$6.56	$0.00	$49.33
2	70.00	$26.10	$10.65	$9.75	$6.56	$0.00	$53.06
3	80.00	$29.83	$10.65	$9.75	$6.56	$0.00	$56.79
4	90.00	$33.56	$10.65	$9.75	$6.56	$0.00	$60.52

Apprentice to Journeyworker Ratio: 1:5

Classification	Effective Date	Base Wage	Health	Pension	Annuity	Supplemental Unemployment	Total Rate
LABORER: CARPENTER TENDER LABORERS LABORERS - ZONE 3 (BUILDING & SITE)	12/1/2025	$36.00	$10.65	$9.75	$8.57	$0.00	$64.97
	6/1/2026	$37.30	$10.65	$9.75	$8.57	$0.00	$66.27
	12/7/2026	$38.60	$10.65	$9.75	$8.57	$0.00	$67.57
	6/7/2027	$40.00	$10.65	$9.75	$8.57	$0.00	$68.97
	12/6/2027	$41.40	$10.65	$9.75	$8.57	$0.00	$70.37
	6/5/2028	$42.90	$10.65	$9.75	$8.57	$0.00	$71.87
	12/4/2028	$44.40	$10.65	$9.75	$8.57	$0.00	$73.37
For apprentice rates see "Apprentice- LABORER"							
LABORER: CEMENT FINISHER TENDER LABORERS LABORERS - ZONE 3 (BUILDING & SITE)	12/1/2025	$36.00	$10.65	$9.75	$8.57	$0.00	$64.97
	6/1/2026	$37.30	$10.65	$9.75	$8.57	$0.00	$66.27
	12/7/2026	$38.60	$10.65	$9.75	$8.57	$0.00	$67.57
	6/7/2027	$40.00	$10.65	$9.75	$8.57	$0.00	$68.97
	12/6/2027	$41.40	$10.65	$9.75	$8.57	$0.00	$70.37
	6/5/2028	$42.90	$10.65	$9.75	$8.57	$0.00	$71.87
	12/4/2028	$44.40	$10.65	$9.75	$8.57	$0.00	$73.37
For apprentice rates see "Apprentice- LABORER"							
LABORER: HAZARDOUS WASTE/ASBESTOS REMOVER LABORERS LABORERS - ZONE 3 (BUILDING & SITE)	12/1/2025	$35.92	$10.65	$9.75	$8.70	$0.00	$65.02
	6/1/2026	$37.22	$10.65	$9.75	$8.70	$0.00	$66.32
	12/7/2026	$38.52	$10.65	$9.75	$8.70	$0.00	$67.62
	6/7/2027	$39.92	$10.65	$9.75	$8.70	$0.00	$69.02
	12/6/2027	$41.32	$10.65	$9.75	$8.70	$0.00	$70.42
	6/5/2028	$42.82	$10.65	$9.75	$8.70	$0.00	$71.92
	12/4/2028	$44.32	$10.65	$9.75	$8.70	$0.00	$73.42
For apprentice rates see "Apprentice- LABORER"							
LABORER: MASON TENDER LABORERS LABORERS - ZONE 3 (BUILDING & SITE)	12/1/2025	$39.00	$10.65	$9.75	$8.57	$0.00	$67.97
	6/1/2026	$40.30	$10.65	$9.75	$8.57	$0.00	$69.27
	12/7/2026	$41.60	$10.65	$9.75	$8.57	$0.00	$70.57
	6/7/2027	$43.00	$10.65	$9.75	$8.57	$0.00	$71.97
	12/6/2027	$44.40	$10.65	$9.75	$8.57	$0.00	$73.37
	6/5/2028	$45.90	$10.65	$9.75	$8.57	$0.00	$74.87
	12/4/2028	$47.40	$10.65	$9.75	$8.57	$0.00	$76.37
For apprentice rates see "Apprentice- LABORER"							
LABORER: MASON TENDER (HEAVY & HIGHWAY) LABORERS LABORERS - ZONE 3 (HEAVY & HIGHWAY)	12/1/2025	$36.24	$10.65	$9.75	$6.56	$0.00	$63.20
	6/1/2026	$37.54	$10.65	$9.75	$6.56	$0.00	$64.50

Construction

Classification	Effective Date	Base Wage	Health	Pension	Annuity	Supplemental Unemployment	Total Rate
	12/1/2026	$38.83	$10.65	$9.75	$6.56	$0.00	$65.79
For apprentice rates see "Apprentice- LABORER (Heavy and Highway)							
LABORER: MULTI-TRADE TENDER LABORERS LABORERS - ZONE 3 (BUILDING & SITE)	12/1/2025	$36.00	$10.65	$9.75	$8.57	$0.00	$64.97
	6/1/2026	$37.30	$10.65	$9.75	$8.57	$0.00	$66.27
	12/7/2026	$38.60	$10.65	$9.75	$8.57	$0.00	$67.57
	6/7/2027	$40.00	$10.65	$9.75	$8.57	$0.00	$68.97
	12/6/2027	$41.40	$10.65	$9.75	$8.57	$0.00	$70.37
	6/5/2028	$42.90	$10.65	$9.75	$8.57	$0.00	$71.87
	12/4/2028	$44.40	$10.65	$9.75	$8.57	$0.00	$73.37
For apprentice rates see "Apprentice- LABORER"							
LABORER: TREE REMOVER LABORERS LABORERS - ZONE 3 (BUILDING & SITE)	12/1/2025	$36.00	$10.65	$9.75	$8.57	$0.00	$64.97
	6/1/2026	$37.30	$10.65	$9.75	$8.57	$0.00	$66.27
	12/7/2026	$38.60	$10.65	$9.75	$8.57	$0.00	$67.57
	6/7/2027	$40.00	$10.65	$9.75	$8.57	$0.00	$68.97
	12/6/2027	$41.40	$10.65	$9.75	$8.57	$0.00	$70.37
	6/5/2028	$42.90	$10.65	$9.75	$8.57	$0.00	$71.87
	12/4/2028	$44.40	$10.65	$9.75	$8.57	$0.00	$73.37
This classification applies to the removal of standing trees, and the trimming and removal of branches and limbs when related to public works construction or site clearance incidental to construction . For apprentice rates see "Apprentice- LABORER"							
LASER BEAM OPERATOR LABORERS LABORERS - ZONE 3 (BUILDING & SITE)	12/1/2025	$36.25	$10.65	$9.75	$8.57	$0.00	$65.22
	6/1/2026	$37.55	$10.65	$9.75	$8.57	$0.00	$66.52
	12/7/2026	$38.85	$10.65	$9.75	$8.57	$0.00	$67.82
	6/7/2027	$40.25	$10.65	$9.75	$8.57	$0.00	$69.22
	12/6/2027	$41.65	$10.65	$9.75	$8.57	$0.00	$70.62
	6/5/2028	$43.15	$10.65	$9.75	$8.57	$0.00	$72.12
	12/4/2028	$44.65	$10.65	$9.75	$8.57	$0.00	$73.62
For apprentice rates see "Apprentice- LABORER"							
LASER BEAM OPERATOR (HEAVY & HIGHWAY) LABORERS LABORERS - ZONE 3 (HEAVY & HIGHWAY)	12/1/2025	$36.24	$10.65	$9.75	$6.56	$0.00	$63.20
	6/1/2026	$37.54	$10.65	$9.75	$6.56	$0.00	$64.50
	12/1/2026	$38.83	$10.65	$9.75	$6.56	$0.00	$65.79
For apprentice rates see "Apprentice- LABORER (Heavy and Highway)							
MARBLE & TILE FINISHERS BRICKLAYERS LOCAL 3 BRICKLAYERS LOCAL 3 (SPR/PITT) - MARBLE & TILE	2/1/2026	$45.56	$12.84	$15.10	$5.41	$0.00	$78.91
	8/1/2026	$47.32	$12.84	$15.10	$5.41	$0.00	$80.67
	2/1/2027	$48.44	$12.84	$15.10	$5.41	$0.00	$81.79

Apprentice: MARBLE & TILE FINISHERS

Effective Date: 2/1/2026

Step	Percent	Apprentice Base Wage	Health	Pension	Annuity	Supplemental Unemployment	Total Rate
1	50.00	$22.78	$12.84	$15.10	$5.41	$0.00	$56.13
2	60.00	$27.34	$12.84	$15.10	$5.41	$0.00	$60.69
3	70.00	$31.89	$12.84	$15.10	$5.41	$0.00	$65.24
4	80.00	$36.45	$12.84	$15.10	$5.41	$0.00	$69.80
5	90.00	$41.00	$12.84	$15.10	$5.41	$0.00	$74.35

Classification	Effective Date	Base Wage	Health	Pension	Annuity	Supplemental Unemployment	Total Rate

Apprentice: MARBLE & TILE FINISHERS

Effective Date: 8/1/2026

Step	Percent	Apprentice Base Wage	Health	Pension	Annuity	Supplemental Unemployment	Total Rate
1	50.00	$23.66	$12.84	$15.10	$5.41	$0.00	$57.01
2	60.00	$28.39	$12.84	$15.10	$5.41	$0.00	$61.74
3	70.00	$33.12	$12.84	$15.10	$5.41	$0.00	$66.47
4	80.00	$37.86	$12.84	$15.10	$5.41	$0.00	$71.21
5	90.00	$42.59	$12.84	$15.10	$5.41	$0.00	$75.94

Apprentice to Journeyworker Ratio: 1:5

MECH. SWEEPER OPERATOR (ON CONST. SITES) OPERATING ENGINEERS LOCAL 98 OPERATING ENGINEERS LOCAL 98	12/1/2023	$39.56	$13.78	$12.15	$3.00	$0.00	$68.49

For apprentice rates see "Apprentice- OPERATING ENGINEERS"

MECHANIC/WELDER/BOOM TRUCK OPERATING ENGINEERS LOCAL 98 OPERATING ENGINEERS LOCAL 98	12/1/2023	$39.03	$13.78	$12.15	$3.00	$0.00	$67.96

For apprentice rates see "Apprentice- OPERATING ENGINEERS"

MILLWRIGHT (Zone 3) MILLWRIGHTS LOCAL 1121 MILLWRIGHTS LOCAL 1121 - Zone 3	1/5/2026	$45.70	$10.08	$11.47	$9.75	$0.00	$77.00

Apprentice: MILLWRIGHT (Zone 3)

Effective Date: 1/5/2026

Step	Percent	Apprentice Base Wage	Health	Pension	Annuity	Supplemental Unemployment	Total Rate
1	55.00	$25.14	$10.08	$0.00	$5.36	$0.00	$40.58
2	65.00	$29.71	$10.08	$0.00	$6.34	$0.00	$46.13
3	75.00	$34.28	$10.08	$11.47	$7.31	$0.00	$63.14
4	85.00	$38.85	$10.08	$11.47	$8.29	$0.00	$68.69

Apprentice Notes

Step 1&2 Appr. indentured after 1/6/2020 receive no pension,

Apprentice to Journeyworker Ratio: 1:4

MORTAR MIXER LABORERS LABORERS - ZONE 3 (BUILDING & SITE)	12/1/2025	$36.25	$10.65	$9.75	$8.57	$0.00	$65.22
	6/1/2026	$37.55	$10.65	$9.75	$8.57	$0.00	$66.52
	12/7/2026	$38.85	$10.65	$9.75	$8.57	$0.00	$67.82
	6/7/2027	$40.25	$10.65	$9.75	$8.57	$0.00	$69.22
	12/6/2027	$41.65	$10.65	$9.75	$8.57	$0.00	$70.62
	6/5/2028	$43.15	$10.65	$9.75	$8.57	$0.00	$72.12
	12/4/2028	$44.65	$10.65	$9.75	$8.57	$0.00	$73.62

For apprentice rates see "Apprentice- LABORER"

Construction

Classification	Effective Date	Base Wage	Health	Pension	Annuity	Supplemental Unemployment	Total Rate
OILER OPERATING ENGINEERS LOCAL 98 OPERATING ENGINEERS LOCAL 98 For apprentice rates see "Apprentice- OPERATING ENGINEERS"	12/1/2023	$35.02	$13.78	$12.15	$3.00	$0.00	$63.95
OTHER POWER DRIVEN EQUIPMENT - CLASS VI OPERATING ENGINEERS LOCAL 98 OPERATING ENGINEERS LOCAL 98 For apprentice rates see "Apprentice- OPERATING ENGINEERS"	12/1/2023	$32.74	$13.78	$12.15	$3.00	$0.00	$61.67
PAINTER (BRIDGES/TANKS) PAINTERS LOCAL 35 PAINTERS LOCAL 35 - ZONE 3	1/1/2026	$59.56	$10.35	$12.00	$12.60	$0.00	$94.51

Apprentice: PAINTER (BRIDGES/TANKS)

Effective Date: 1/1/2026

Step	Percent	Apprentice Base Wage	Health	Pension	Annuity	Supplemental Unemployment	Total Rate
1	50.00	$29.78	$10.35	$0.00	$0.00	$0.00	$40.13
2	55.00	$32.76	$10.35	$0.00	$6.93	$0.00	$50.04
3	60.00	$35.74	$10.35	$0.00	$7.56	$0.00	$53.65
4	65.00	$38.71	$10.35	$0.00	$8.19	$0.00	$57.25
5	70.00	$41.69	$10.35	$12.00	$8.82	$0.00	$72.86
6	75.00	$44.67	$10.35	$12.00	$9.45	$0.00	$76.47
7	80.00	$47.65	$10.35	$12.00	$10.08	$0.00	$80.08
8	90.00	$53.60	$10.35	$12.00	$11.34	$0.00	$87.29

Apprentice to Journeyworker Ratio: 1:1

PAINTER (SPRAY OR SANDBLAST, NEW) * * If 30% or more of surfaces to be painted are new construction, NEW paint rate shall be used. PAINTERS LOCAL 35 PAINTERS LOCAL 35 - ZONE 3	1/1/2026	$42.03	$10.35	$12.00	$8.35	$0.00	$72.73

Apprentice: PAINTER (SPRAY OR SANDBLAST, NEW) *

Effective Date: 1/1/2026

Step	Percent	Apprentice Base Wage	Health	Pension	Annuity	Supplemental Unemployment	Total Rate
1	50.00	$21.02	$10.35	$0.00	$0.00	$0.00	$31.37
2	55.00	$23.12	$10.35	$0.00	$4.59	$0.00	$38.06
3	60.00	$25.22	$10.35	$0.00	$5.01	$0.00	$40.58
4	65.00	$27.32	$10.35	$0.00	$5.43	$0.00	$43.10
5	70.00	$29.42	$10.35	$12.00	$5.85	$0.00	$57.62
6	75.00	$31.52	$10.35	$12.00	$6.26	$0.00	$60.13
7	80.00	$33.62	$10.35	$12.00	$6.68	$0.00	$62.65
8	90.00	$37.83	$10.35	$12.00	$7.52	$0.00	$67.70

Apprentice to Journeyworker Ratio: 1:1

PAINTER (SPRAY OR SANDBLAST, REPAINT)	1/1/2026	$39.35	$10.35	$12.00	$8.35	$0.00	$70.05

Construction

Classification	Effective Date	Base Wage	Health	Pension	Annuity	Supplemental Unemployment	Total Rate
PAINTERS LOCAL 35 PAINTERS LOCAL 35 - ZONE 3							

Apprentice: PAINTER (SPRAY OR SANDBLAST, REPAINT)

Effective Date: 1/1/2026

Step	Percent	Apprentice Base Wage	Health	Pension	Annuity	Supplemental Unemployment	Total Rate
1	50.00	$19.68	$10.35	$0.00	$0.00	$0.00	$30.03
2	55.00	$21.64	$10.35	$0.00	$4.59	$0.00	$36.58
3	60.00	$23.61	$10.35	$0.00	$5.01	$0.00	$38.97
4	65.00	$25.58	$10.35	$0.00	$5.43	$0.00	$41.36
5	70.00	$27.55	$10.35	$12.00	$5.85	$0.00	$55.75
6	75.00	$29.51	$10.35	$12.00	$6.26	$0.00	$58.12
7	80.00	$31.48	$10.35	$12.00	$6.68	$0.00	$60.51
8	90.00	$35.42	$10.35	$12.00	$7.52	$0.00	$65.29

Apprentice to Journeyworker Ratio: 1:1

PAINTER / TAPER (BRUSH, NEW) *	1/1/2026	$40.63	$10.35	$12.00	$8.35	$0.00	$71.33
* If 30% or more of surfaces to be painted are new construction, NEW paint rate shall be used. PAINTERS LOCAL 35 PAINTERS LOCAL 35 - ZONE 3							

Apprentice: PAINTER / TAPER (BRUSH, NEW) *

Effective Date: 1/1/2026

Step	Percent	Apprentice Base Wage	Health	Pension	Annuity	Supplemental Unemployment	Total Rate
1	50.00	$20.32	$10.35	$0.00	$0.00	$0.00	$30.67
2	55.00	$22.35	$10.35	$0.00	$4.59	$0.00	$37.29
3	60.00	$24.38	$10.35	$0.00	$5.01	$0.00	$39.74
4	65.00	$26.41	$10.35	$0.00	$5.43	$0.00	$42.19
5	70.00	$28.44	$10.35	$12.00	$5.85	$0.00	$56.64
6	75.00	$30.47	$10.35	$12.00	$6.26	$0.00	$59.08
7	80.00	$32.50	$10.35	$12.00	$6.68	$0.00	$61.53
8	90.00	$36.57	$10.35	$12.00	$7.52	$0.00	$66.44

Apprentice to Journeyworker Ratio: 1:1

PAINTER / TAPER (BRUSH, REPAINT) PAINTERS LOCAL 35 PAINTERS LOCAL 35 - ZONE 3	1/1/2026	$37.95	$10.35	$12.00	$8.35	$0.00	$68.65

Apprentice: PAINTER / TAPER (BRUSH, REPAINT)

Effective Date: 1/1/2026

Step	Percent	Apprentice Base Wage	Health	Pension	Annuity	Supplemental Unemployment	Total Rate
1	50.00	$18.98	$10.35	$0.00	$0.00	$0.00	$29.33

Construction

Classification	Effective Date	Base Wage	Health	Pension	Annuity	Supplemental Unemployment	Total Rate

Apprentice: PAINTER / TAPER (BRUSH, REPAINT)

Effective Date: 1/1/2026

Step	Percent	Apprentice Base Wage	Health	Pension	Annuity	Supplemental Unemployment	Total Rate
2	55.00	$20.87	$10.35	$0.00	$4.59	$0.00	$35.81
3	60.00	$22.77	$10.35	$0.00	$5.01	$0.00	$38.13
4	65.00	$24.67	$10.35	$0.00	$5.43	$0.00	$40.45
5	70.00	$26.57	$10.35	$12.00	$5.85	$0.00	$54.77
6	75.00	$28.46	$10.35	$12.00	$6.26	$0.00	$57.07
7	80.00	$30.36	$10.35	$12.00	$6.68	$0.00	$59.39
8	90.00	$34.16	$10.35	$12.00	$7.52	$0.00	$64.03

Apprentice to Journeyworker Ratio: 1:1

PAINTER TRAFFIC MARKINGS (HEAVY/HIGHWAY) LABORERS LABORERS - ZONE 3 (HEAVY & HIGHWAY)	12/1/2025	$35.99	$10.65	$9.75	$6.56	$0.00	$62.95
	6/1/2026	$37.29	$10.65	$9.75	$6.56	$0.00	$64.25
	12/1/2026	$38.58	$10.65	$9.75	$6.56	$0.00	$65.54
For apprentice rates see "Apprentice- LABORER (Heavy and Highway)							
PANEL & PICKUP TRUCKS DRIVER TEAMSTERS JOINT COUNCIL NO. 10 TEAMSTERS JOINT COUNCIL NO. 10 ZONE B	1/1/2026	$40.78	$16.17	$21.78	$0.00	$0.00	$78.73
	6/1/2026	$41.78	$16.17	$21.78	$0.00	$0.00	$79.73
	12/1/2026	$41.78	$16.17	$23.52	$0.00	$0.00	$81.47
	1/1/2027	$41.78	$16.77	$23.52	$0.00	$0.00	$82.07
PIER AND DOCK CONSTRUCTOR (UNDERPINNING AND DECK) PILE DRIVER LOCAL 56 PILE DRIVER LOCAL 56 (ZONE 3)	8/1/2024	$49.19	$10.08	$11.62	$12.67	$0.00	$83.56
For apprentice rates see "Apprentice- PILE DRIVER"							
PILE DRIVER PILE DRIVER LOCAL 56 PILE DRIVER LOCAL 56 (ZONE 3)	8/1/2024	$49.19	$10.08	$11.62	$12.67	$0.00	$83.56

Apprentice: PILE DRIVER

Effective Date: 8/1/2024

Step	Percent	Apprentice Base Wage	Health	Pension	Annuity	Supplemental Unemployment	Total Rate
1	45.00	$22.14	$10.08	$0.00	$2.53	$0.00	$34.75
2	55.00	$27.05	$10.08	$0.00	$5.07	$0.00	$42.20
3	70.00	$34.43	$10.08	$11.62	$7.60	$0.00	$63.73
4	80.00	$39.35	$10.08	$11.62	$10.14	$0.00	$71.19

Apprentice to Journeyworker Ratio: 1:5

PIPELAYER LABORERS LABORERS - ZONE 3 (BUILDING & SITE)	12/1/2025	$36.25	$10.65	$9.75	$8.57	$0.00	$65.22
	6/1/2026	$37.55	$10.65	$9.75	$8.57	$0.00	$66.52
	12/7/2026	$38.85	$10.65	$9.75	$8.57	$0.00	$67.82
	6/7/2027	$40.25	$10.65	$9.75	$8.57	$0.00	$69.22
	12/6/2027	$41.65	$10.65	$9.75	$8.57	$0.00	$70.62

Construction

Classification	Effective Date	Base Wage	Health	Pension	Annuity	Supplemental Unemployment	Total Rate
	6/5/2028	$43.15	$10.65	$9.75	$8.57	$0.00	$72.12
	12/4/2028	$44.65	$10.65	$9.75	$8.57	$0.00	$73.62
For apprentice rates see "Apprentice- LABORER"							
PIPELAYER (HEAVY & HIGHWAY)	12/1/2025	$36.24	$10.65	$9.75	$6.56	$0.00	$63.20
LABORERS LABORERS - ZONE 3 (HEAVY & HIGHWAY)	6/1/2026	$37.54	$10.65	$9.75	$6.56	$0.00	$64.50
	12/1/2026	$38.83	$10.65	$9.75	$6.56	$0.00	$65.79
For apprentice rates see "Apprentice- LABORER (Heavy and Highway)"							
PLUMBER & PIPEFITTER PLUMBERS & PIPEFITTERS LOCAL 104 PLUMBERS & PIPEFITTERS LOCAL 104	9/17/2025	$52.26	$12.00	$10.85	$7.10	$0.00	$82.21
	3/17/2026	$54.26	$12.00	$10.85	$7.10	$0.00	$84.21
	9/17/2026	$56.26	$12.00	$10.85	$7.10	$0.00	$86.21
	3/17/2027	$58.26	$12.00	$10.85	$7.10	$0.00	$88.21
	9/17/2027	$60.26	$12.00	$10.85	$7.10	$0.00	$90.21
	3/17/2028	$62.26	$12.00	$10.85	$7.10	$0.00	$92.21
	9/17/2028	$64.26	$12.00	$10.85	$7.10	$0.00	$94.21
	3/17/2029	$66.26	$12.00	$10.85	$7.10	$0.00	$96.21

Apprentice: PLUMBER & PIPEFITTER

Effective Date: 9/17/2025

Step	Percent	Apprentice Base Wage	Health	Pension	Annuity	Supplemental Unemployment	Total Rate
1	45.00	$23.52	$12.00	$10.85	$0.00	$0.00	$46.37
2	50.00	$26.13	$12.00	$10.85	$0.00	$0.00	$48.98
3	55.00	$28.74	$12.00	$10.85	$0.00	$0.00	$51.59
4	60.00	$31.36	$12.00	$10.85	$0.00	$0.00	$54.21
5	65.00	$33.97	$12.00	$10.85	$0.00	$0.00	$56.82
6	70.00	$36.58	$12.00	$10.85	$0.00	$0.00	$59.43
7	75.00	$39.20	$12.00	$10.85	$0.00	$0.00	$62.05
8	80.00	$41.81	$12.00	$10.85	$0.00	$0.00	$64.66
9	85.00	$44.42	$12.00	$10.85	$7.10	$0.00	$74.37
10	85.00	$44.42	$12.00	$10.85	$7.10	$0.00	$74.37

Apprentice: PLUMBER & PIPEFITTER

Effective Date: 3/17/2026

Step	Percent	Apprentice Base Wage	Health	Pension	Annuity	Supplemental Unemployment	Total Rate
1	45.00	$24.42	$12.00	$10.85	$0.00	$0.00	$47.27
2	50.00	$27.13	$12.00	$10.85	$0.00	$0.00	$49.98
3	55.00	$29.84	$12.00	$10.85	$0.00	$0.00	$52.69
4	60.00	$32.56	$12.00	$10.85	$0.00	$0.00	$55.41
5	65.00	$35.27	$12.00	$10.85	$0.00	$0.00	$58.12
6	70.00	$37.98	$12.00	$10.85	$0.00	$0.00	$60.83
7	75.00	$40.70	$12.00	$10.85	$0.00	$0.00	$63.55
8	80.00	$43.41	$12.00	$10.85	$0.00	$0.00	$66.26
9	85.00	$46.12	$12.00	$10.85	$7.10	$0.00	$76.07
10	85.00	$46.12	$12.00	$10.85	$7.10	$0.00	$76.07

Construction

Classification	Effective Date	Base Wage	Health	Pension	Annuity	Supplemental Unemployment	Total Rate
Apprentice Notes							
**1:1,2:5,3:9,4:12							
Apprentice to Journeyworker Ratio: 1:1							
PNEUMATIC CONTROLS (TEMP.)	9/17/2025	$52.26	$12.00	$10.85	$7.10	$0.00	$82.21
PLUMBERS & PIPEFITTERS LOCAL 104	3/17/2026	$54.26	$12.00	$10.85	$7.10	$0.00	$84.21
PLUMBERS & PIPEFITTERS LOCAL 104	9/17/2026	$56.26	$12.00	$10.85	$7.10	$0.00	$86.21
	3/17/2027	$58.26	$12.00	$10.85	$7.10	$0.00	$88.21
	9/17/2027	$60.26	$12.00	$10.85	$7.10	$0.00	$90.21
	3/17/2028	$62.26	$12.00	$10.85	$7.10	$0.00	$92.21
	9/17/2028	$64.26	$12.00	$10.85	$7.10	$0.00	$94.21
	3/17/2029	$66.26	$12.00	$10.85	$7.10	$0.00	$96.21
For apprentice rates see "Apprentice- PIPEFITTER" or "PLUMBER/PIPEFITTER"							
PNEUMATIC DRILL/TOOL OPERATOR (HEAVY & HIGHWAY)	12/1/2025	$36.24	$10.65	$9.75	$6.56	$0.00	$63.20
LABORERS	6/1/2026	$37.54	$10.65	$9.75	$6.56	$0.00	$64.50
LABORERS - ZONE 3 (HEAVY & HIGHWAY)	12/1/2026	$38.83	$10.65	$9.75	$6.56	$0.00	$65.79
For apprentice rates see "Apprentice- LABORER (Heavy and Highway)							
POWDERMAN & BLASTER	12/1/2025	$37.00	$10.65	$9.75	$8.57	$0.00	$65.97
LABORERS	6/1/2026	$38.30	$10.65	$9.75	$8.57	$0.00	$67.27
LABORERS - ZONE 3 (BUILDING & SITE)	12/7/2026	$39.60	$10.65	$9.75	$8.57	$0.00	$68.57
	6/7/2027	$41.00	$10.65	$9.75	$8.57	$0.00	$69.97
	12/6/2027	$42.40	$10.65	$9.75	$8.57	$0.00	$71.37
	6/5/2028	$43.90	$10.65	$9.75	$8.57	$0.00	$72.87
	12/4/2028	$45.40	$10.65	$9.75	$8.57	$0.00	$74.37
For apprentice rates see "Apprentice- LABORER"							
POWDERMAN & BLASTER (HEAVY & HIGHWAY)	12/1/2025	$36.99	$10.65	$9.75	$6.56	$0.00	$63.95
LABORERS	6/1/2026	$38.29	$10.65	$9.75	$6.56	$0.00	$65.25
LABORERS - ZONE 3 (HEAVY & HIGHWAY)	12/1/2026	$39.58	$10.65	$9.75	$6.56	$0.00	$66.54
For apprentice rates see "Apprentice- LABORER (Heavy and Highway)							
PUMP OPERATOR (CONCRETE)	12/1/2023	$39.56	$13.78	$12.15	$3.00	$0.00	$68.49
OPERATING ENGINEERS LOCAL 98							
OPERATING ENGINEERS LOCAL 98							
For apprentice rates see "Apprentice- OPERATING ENGINEERS"							
PUMP OPERATOR (DEWATERING, OTHER)	12/1/2023	$39.03	$13.78	$12.15	$3.00	$0.00	$67.96
OPERATING ENGINEERS LOCAL 98							
OPERATING ENGINEERS LOCAL 98							
For apprentice rates see "Apprentice- OPERATING ENGINEERS"							
READY-MIX CONCRETE DRIVER	5/1/2024	$26.14	$11.82	$7.25	$0.00	$0.00	$45.21
TEAMSTERS 404 - Construction Service (Northampton)							
TEAMSTERS 404 - Construction Service (Northampton)							
RIDE-ON MOTORIZED BUGGY OPERATOR	12/1/2025	$36.25	$10.65	$9.75	$8.57	$0.00	$65.22
LABORERS	6/1/2026	$37.55	$10.65	$9.75	$8.57	$0.00	$66.52
LABORERS - ZONE 3 (BUILDING & SITE)	12/7/2026	$38.85	$10.65	$9.75	$8.57	$0.00	$67.82

Construction

Classification	Effective Date	Base Wage	Health	Pension	Annuity	Supplemental Unemployment	Total Rate
	6/7/2027	$40.25	$10.65	$9.75	$8.57	$0.00	$69.22
	12/6/2027	$41.65	$10.65	$9.75	$8.57	$0.00	$70.62
	6/5/2028	$43.15	$10.65	$9.75	$8.57	$0.00	$72.12
	12/4/2028	$44.65	$10.65	$9.75	$8.57	$0.00	$73.62
For apprentice rates see "Apprentice- LABORER"							
ROLLER OPERATOR OPERATING ENGINEERS LOCAL 98 OPERATING ENGINEERS LOCAL 98	12/1/2023	$38.42	$13.78	$12.15	$3.00	$0.00	$67.35
For apprentice rates see "Apprentice- OPERATING ENGINEERS"							
ROOFER (Coal tar pitch) ROOFERS LOCAL 248 ROOFERS LOCAL 248	10/2/2025	$44.73	$10.60	$8.70	$10.00	$0.00	$74.03
	7/16/2026	$46.73	$10.60	$8.70	$10.00	$0.00	$76.03
For apprentice rates see "Apprentice- ROOFER"							
ROOFER (Inc.Roofer Waterproofng &Roofer Damproofg) ROOFERS LOCAL 248 ROOFERS LOCAL 248	10/2/2025	$44.23	$10.60	$8.70	$10.00	$0.00	$73.53
	7/16/2026	$46.23	$10.60	$8.70	$10.00	$0.00	$75.53
ROOFER SLATE / TILE / PRECAST CONCRETE ROOFERS LOCAL 248 ROOFERS LOCAL 248	10/2/2025	$44.73	$10.60	$8.70	$10.00	$0.00	$74.03
	7/16/2026	$46.73	$10.60	$8.70	$10.00	$0.00	$76.03
For apprentice rates see "Apprentice- ROOFER"							
SCRAPER OPERATING ENGINEERS LOCAL 98 OPERATING ENGINEERS LOCAL 98	12/1/2023	$39.03	$13.78	$12.15	$3.00	$0.00	$67.96
For apprentice rates see "Apprentice- OPERATING ENGINEERS"							
SELF-POWERED ROLLERS AND COMPACTORS (TAMPERS) OPERATING ENGINEERS LOCAL 98 OPERATING ENGINEERS LOCAL 98	12/1/2023	$38.42	$13.78	$12.15	$3.00	$0.00	$67.35
For apprentice rates see "Apprentice- OPERATING ENGINEERS"							
SELF-PROPELLED POWER BROOM OPERATING ENGINEERS LOCAL 98 OPERATING ENGINEERS LOCAL 98	12/1/2023	$35.80	$13.78	$12.15	$3.00	$0.00	$64.73
For apprentice rates see "Apprentice- OPERATING ENGINEERS"							
SHEETMETAL WORKER SHEETMETAL WORKERS LOCAL 63 SHEETMETAL WORKERS LOCAL 63	7/1/2025	$43.48	$12.94	$11.01	$8.72	$2.13	$78.28
	7/1/2026	$43.48	$13.24	$11.01	$9.92	$2.13	$79.78
	1/1/2027	$43.48	$13.54	$11.01	$11.12	$2.13	$81.28
	7/1/2027	$44.98	$13.54	$11.01	$11.12	$2.13	$82.78
	1/1/2028	$46.48	$13.54	$11.01	$11.12	$2.13	$84.28

Apprentice: SHEETMETAL WORKER

Effective Date: 7/1/2025

Step	Percent	Apprentice Base Wage	Health	Pension	Annuity	Supplemental Unemployment	Total Rate
1	45.00	$19.57	$5.82	$4.95	$0.00	$0.85	$31.19
2	50.00	$21.74	$6.47	$5.51	$0.00	$0.94	$34.66

Construction

Classification	Effective Date	Base Wage	Health	Pension	Annuity	Supplemental Unemployment	Total Rate

Apprentice: SHEETMETAL WORKER

Effective Date: 7/1/2025

Step	Percent	Apprentice Base Wage	Health	Pension	Annuity	Supplemental Unemployment	Total Rate
3	55.00	$23.91	$7.12	$9.91	$0.00	$1.15	$42.09
4	60.00	$26.09	$7.76	$9.91	$0.00	$1.23	$44.99
5	65.00	$28.26	$8.41	$9.91	$0.00	$1.31	$47.89
6	70.00	$30.44	$9.06	$9.91	$0.00	$1.39	$50.80
7	75.00	$32.61	$9.71	$9.91	$0.00	$1.47	$53.70
8	80.00	$34.78	$10.35	$9.91	$8.72	$1.78	$65.54
9	85.00	$36.96	$11.00	$9.91	$8.72	$1.86	$68.45
10	90.00	$39.13	$11.65	$9.91	$8.72	$1.94	$71.35

Apprentice: SHEETMETAL WORKER

Effective Date: 7/1/2026

Step	Percent	Apprentice Base Wage	Health	Pension	Annuity	Supplemental Unemployment	Total Rate
1	45.00	$19.57	$5.96	$4.95	$0.00	$0.85	$31.33
2	50.00	$21.74	$6.62	$5.51	$0.00	$0.94	$34.81
3	55.00	$23.91	$7.28	$9.91	$0.00	$1.15	$42.25
4	60.00	$26.09	$7.94	$9.91	$0.00	$1.23	$45.17
5	65.00	$28.26	$8.60	$9.91	$0.00	$1.31	$48.08
6	70.00	$30.44	$9.27	$9.91	$0.00	$1.39	$51.01
7	75.00	$32.61	$9.93	$9.91	$0.00	$1.47	$53.92
8	80.00	$34.78	$10.59	$9.91	$9.92	$1.78	$66.98
9	85.00	$36.96	$11.25	$9.91	$9.92	$1.86	$69.90
10	90.00	$39.13	$11.92	$9.91	$9.92	$1.94	$72.82

Apprentice to Journeyworker Ratio: 1:3

Classification	Effective Date	Base Wage	Health	Pension	Annuity	Supplemental Unemployment	Total Rate
SPECIALIZED EARTH MOVING EQUIP < 35 TONS TEAMSTERS JOINT COUNCIL NO. 10 TEAMSTERS JOINT COUNCIL NO. 10 ZONE B	1/1/2026	$41.24	$16.17	$21.78	$0.00	$0.00	$79.19
	6/1/2026	$42.24	$16.17	$21.78	$0.00	$0.00	$80.19
	12/1/2026	$42.24	$16.17	$23.52	$0.00	$0.00	$81.93
	1/1/2027	$42.24	$16.77	$23.52	$0.00	$0.00	$82.53
SPECIALIZED EARTH MOVING EQUIP > 35 TONS TEAMSTERS JOINT COUNCIL NO. 10 TEAMSTERS JOINT COUNCIL NO. 10 ZONE B	1/1/2026	$41.53	$16.17	$21.78	$0.00	$0.00	$79.48
	6/1/2026	$42.53	$16.17	$21.78	$0.00	$0.00	$80.48
	12/1/2026	$42.53	$16.17	$23.52	$0.00	$0.00	$82.22
	1/1/2027	$42.53	$16.77	$23.52	$0.00	$0.00	$82.82
SPRINKLER FITTER SPRINKLER FITTERS LOCAL 669 SPRINKLER FITTERS LOCAL 669	1/1/2026	$53.25	$13.60	$7.45	$9.41	$0.00	$83.71
	4/1/2026	$56.54	$13.60	$7.45	$9.41	$0.00	$87.00
	7/1/2026	$56.54	$13.60	$7.45	$9.41	$0.00	$87.00
	10/1/2026	$56.54	$13.60	$7.45	$9.41	$0.00	$87.00
	1/1/2027	$56.54	$14.55	$7.50	$9.41	$0.00	$88.00
	4/1/2027	$59.83	$14.55	$7.50	$9.41	$0.00	$91.29
	7/1/2027	$59.83	$14.55	$7.50	$9.41	$0.00	$91.29
	10/1/2027	$59.83	$14.55	$7.50	$9.41	$0.00	$91.29

Construction

Classification	Effective Date	Base Wage	Health	Pension	Annuity	Supplemental Unemployment	Total Rate
	1/1/2028	$59.83	$15.50	$7.55	$9.41	$0.00	$92.29

Apprentice: SPRINKLER FITTER

Effective Date: 1/1/2026

Step	Percent	Apprentice Base Wage	Health	Pension	Annuity	Supplemental Unemployment	Total Rate
1	43.00	$26.94	$9.64	$0.00	$0.00	$0.00	$36.58
2	48.00	$30.08	$9.64	$0.00	$0.00	$0.00	$39.72
3	52.00	$32.58	$13.60	$7.45	$1.15	$0.00	$54.78
4	56.00	$35.09	$13.60	$7.45	$1.15	$0.00	$57.29
5	59.00	$36.97	$13.60	$7.45	$1.40	$0.00	$59.42
6	64.00	$40.10	$13.60	$7.45	$1.40	$0.00	$62.55
7	68.00	$42.61	$13.60	$7.45	$1.40	$0.00	$65.06
8	72.00	$45.12	$13.60	$7.45	$1.40	$0.00	$67.57
9	76.00	$47.62	$13.60	$7.45	$1.40	$0.00	$70.07
10	80.00	$50.13	$13.60	$7.45	$1.40	$0.00	$72.58

Apprentice: SPRINKLER FITTER

Effective Date: 4/1/2026

Step	Percent	Apprentice Base Wage	Health	Pension	Annuity	Supplemental Unemployment	Total Rate
1	43.00	$28.36	$9.64	$0.00	$0.00	$0.00	$38.00
2	48.00	$31.66	$9.64	$0.00	$0.00	$0.00	$41.30
3	52.00	$34.29	$13.60	$7.45	$1.15	$0.00	$56.49
4	56.00	$36.93	$13.60	$7.45	$1.15	$0.00	$59.13
5	59.00	$38.91	$13.60	$7.45	$1.40	$0.00	$61.36
6	64.00	$42.21	$13.60	$7.45	$1.40	$0.00	$64.66
7	68.00	$44.85	$13.60	$7.45	$1.40	$0.00	$67.30
8	72.00	$47.48	$13.60	$7.45	$1.40	$0.00	$69.93
9	76.00	$50.12	$13.60	$7.45	$1.40	$0.00	$72.57
10	80.00	$52.76	$13.60	$7.45	$1.40	$0.00	$75.21

Apprentice to Journeyworker Ratio: 1:1

TELECOMMUNICATION TECHNICIAN	12/28/2025	$53.26	$13.75	$8.40	$6.96	$0.00	$82.37
TELECOMMUNICATION TECHNICIAN	6/28/2026	$54.41	$14.00	$8.43	$7.03	$0.00	$83.87
ELECTRICIANS LOCAL 7							
ELECTRICIANS LOCAL 7	1/3/2027	$55.56	$14.25	$8.47	$7.09	$0.00	$85.37

For apprentice rates and ratios see "Apprentice- ELECTRICIAN"

Apprentice: TELECOMMUNICATION TECHNICIAN

Effective Date: 12/28/2025

Step	Percent	Apprentice Base Wage	Health	Pension	Annuity	Supplemental Unemployment	Total Rate
1	40.00	$21.30	$7.65	$0.63	$0.00	$0.00	$29.58
2	45.00	$23.97	$7.65	$0.70	$0.00	$0.00	$32.32
3	50.00	$26.63	$13.75	$7.53	$0.00	$0.00	$47.91

Construction

Classification	Effective Date	Base Wage	Health	Pension	Annuity	Supplemental Unemployment	Total Rate
TERRAZZO FINISHERS	2/10/2026	$66.89	$12.84	$15.57	$8.02	$0.00	$103.32
BRICKLAYERS LOCAL 3	8/1/2026	$69.09	$12.84	$15.57	$8.02	$0.00	$105.52
BRICKLAYERS LOCAL 3 (SPR/PITT) - MARBLE & TILE	2/1/2027	$70.49	$12.84	$15.57	$8.02	$0.00	$106.92

Apprentice: TELECOMMUNICATION TECHNICIAN

Effective Date: 12/28/2025

Step	Percent	Apprentice Base Wage	Health	Pension	Annuity	Supplemental Unemployment	Total Rate
4	55.00	$29.29	$13.75	$7.61	$0.00	$0.00	$50.65
5	65.00	$34.62	$13.75	$9.84	$0.00	$0.00	$58.21
6	70.00	$37.28	$13.75	$11.30	$0.00	$0.00	$62.33

Apprentice: TELECOMMUNICATION TECHNICIAN

Effective Date: 6/28/2026

Step	Percent	Apprentice Base Wage	Health	Pension	Annuity	Supplemental Unemployment	Total Rate
1	40.00	$21.76	$7.80	$0.63	$0.00	$0.00	$30.19
2	45.00	$24.48	$7.80	$0.70	$0.00	$0.00	$32.98
3	50.00	$27.21	$14.00	$7.53	$0.00	$0.00	$48.74
4	55.00	$29.93	$14.00	$7.61	$0.00	$0.00	$51.54
5	65.00	$35.37	$14.00	$9.84	$0.00	$0.00	$59.21
6	70.00	$38.09	$14.00	$11.30	$0.00	$0.00	$63.39

Apprentice to Journeyworker Ratio: 1:1

Apprentice: TERRAZZO FINISHERS

Effective Date: 2/10/2026

Step	Percent	Apprentice Base Wage	Health	Pension	Annuity	Supplemental Unemployment	Total Rate
1	50.00	$33.45	$12.84	$15.57	$8.02	$0.00	$69.88
2	60.00	$40.13	$12.84	$15.57	$8.02	$0.00	$76.56
3	70.00	$46.82	$12.84	$15.57	$8.02	$0.00	$83.25
4	80.00	$53.51	$12.84	$15.57	$8.02	$0.00	$89.94
5	90.00	$60.20	$12.84	$15.57	$8.02	$0.00	$96.63

Apprentice: TERRAZZO FINISHERS

Effective Date: 8/1/2026

Step	Percent	Apprentice Base Wage	Health	Pension	Annuity	Supplemental Unemployment	Total Rate
1	50.00	$34.55	$12.84	$15.57	$8.02	$0.00	$70.98
2	60.00	$41.45	$12.84	$15.57	$8.02	$0.00	$77.88
3	70.00	$48.36	$12.84	$15.57	$8.02	$0.00	$84.79
4	80.00	$55.27	$12.84	$15.57	$8.02	$0.00	$91.70
5	90.00	$62.18	$12.84	$15.57	$8.02	$0.00	$98.61

Apprentice to Journeyworker Ratio: 1:5

Construction

Classification	Effective Date	Base Wage	Health	Pension	Annuity	Supplemental Unemployment	Total Rate
TERRAZZO MECHANIC	2/1/2026	$67.97	$12.84	$15.57	$7.99	$0.00	$104.37
BRICKLAYERS LOCAL 3	8/1/2026	$70.17	$12.84	$15.57	$7.99	$0.00	$106.57
BRICKLAYERS LOCAL 3 (SPR/PITT) - MARBLE & TILE	2/1/2027	$71.57	$12.84	$15.57	$7.99	$0.00	$107.97

Apprentice: TERRAZZO MECHANIC

Effective Date: 2/1/2026

Step	Percent	Apprentice Base Wage	Health	Pension	Annuity	Supplemental Unemployment	Total Rate
1	50.00	$33.99	$12.84	$15.57	$7.99	$0.00	$70.39
2	60.00	$40.78	$12.84	$15.57	$7.99	$0.00	$77.18
3	70.00	$47.58	$12.84	$15.57	$7.99	$0.00	$83.98
4	80.00	$54.38	$12.84	$15.57	$7.99	$0.00	$90.78
5	90.00	$61.17	$12.84	$15.57	$7.99	$0.00	$97.57

Apprentice: TERRAZZO MECHANIC

Effective Date: 8/1/2026

Step	Percent	Apprentice Base Wage	Health	Pension	Annuity	Supplemental Unemployment	Total Rate
1	50.00	$35.09	$12.84	$15.57	$7.99	$0.00	$71.49
2	60.00	$42.10	$12.84	$15.57	$7.99	$0.00	$78.50
3	70.00	$49.12	$12.84	$15.57	$7.99	$0.00	$85.52
4	80.00	$56.14	$12.84	$15.57	$7.99	$0.00	$92.54
5	90.00	$63.15	$12.84	$15.57	$7.99	$0.00	$99.55

Apprentice to Journeyworker Ratio: 1:5

TEST BORING DRILLER	12/1/2025	$51.95	$10.65	$9.75	$9.80	$0.00	$82.15
LABORERS	6/1/2026	$53.50	$10.65	$9.75	$9.80	$0.00	$83.70
LABORERS - FOUNDATION AND MARINE	12/1/2026	$55.00	$10.65	$9.75	$9.80	$0.00	$85.20

For apprentice rates see "Apprentice- LABORER"

TEST BORING DRILLER HELPER	12/1/2025	$48.07	$10.65	$9.75	$9.80	$0.00	$78.27
LABORERS	6/1/2026	$49.62	$10.65	$9.75	$9.80	$0.00	$79.82
LABORERS - FOUNDATION AND MARINE	12/1/2026	$51.12	$10.65	$9.75	$9.80	$0.00	$81.32

For apprentice rates see "Apprentice- LABORER"

TEST BORING LABORER	12/1/2025	$47.95	$10.65	$9.75	$9.80	$0.00	$78.15
LABORERS	6/1/2026	$49.50	$10.65	$9.75	$9.80	$0.00	$79.70
LABORERS - FOUNDATION AND MARINE	12/1/2026	$51.00	$10.65	$9.75	$9.80	$0.00	$81.20

For apprentice rates see "Apprentice- LABORER"

TRACTORS	12/1/2023	$38.42	$13.78	$12.15	$3.00	$0.00	$67.35
OPERATING ENGINEERS LOCAL 98							
OPERATING ENGINEERS LOCAL 98							

For apprentice rates see "Apprentice- OPERATING ENGINEERS"

TRAILERS FOR EARTH MOVING EQUIPMENT	1/1/2026	$41.82	$16.17	$21.78	$0.00	$0.00	$79.77
TEAMSTERS JOINT COUNCIL NO. 10	6/1/2026	$42.82	$16.17	$21.78	$0.00	$0.00	$80.77

Construction

Classification	Effective Date	Base Wage	Health	Pension	Annuity	Supplemental Unemployment	Total Rate
TEAMSTERS JOINT COUNCIL NO. 10 ZONE B	12/1/2026	$42.82	$16.17	$23.52	$0.00	$0.00	$82.51
	1/1/2027	$42.82	$16.77	$23.52	$0.00	$0.00	$83.11
TUNNEL WORK - COMPRESSED AIR	12/1/2025	$60.18	$10.65	$9.75	$10.25	$0.00	$90.83
LABORERS LABORERS (COMPRESSED AIR)	6/1/2026	$61.73	$10.65	$9.75	$10.25	$0.00	$92.38
	12/1/2026	$63.23	$10.65	$9.75	$10.25	$0.00	$93.88
For apprentice rates see "Apprentice- LABORER"							
TUNNEL WORK - COMPRESSED AIR (HAZ. WASTE)	12/1/2025	$62.18	$10.65	$9.75	$10.25	$0.00	$92.83
LABORERS LABORERS (COMPRESSED AIR)	6/1/2026	$63.73	$10.65	$9.75	$10.25	$0.00	$94.38
	12/1/2026	$65.23	$10.65	$9.75	$10.25	$0.00	$95.88
For apprentice rates see "Apprentice- LABORER"							
TUNNEL WORK - FREE AIR	12/1/2025	$52.25	$10.65	$9.75	$10.25	$0.00	$82.90
LABORERS LABORERS (FREE AIR TUNNEL)	6/1/2026	$53.80	$10.65	$9.75	$10.25	$0.00	$84.45
	12/1/2026	$55.30	$10.65	$9.75	$10.25	$0.00	$85.95
For apprentice rates see "Apprentice- LABORER"							
TUNNEL WORK - FREE AIR (HAZ. WASTE)	12/1/2025	$54.25	$10.65	$9.75	$10.25	$0.00	$84.90
LABORERS LABORERS (FREE AIR TUNNEL)	6/1/2026	$55.80	$10.65	$9.75	$10.25	$0.00	$86.45
	12/1/2026	$57.30	$10.65	$9.75	$10.25	$0.00	$87.95
For apprentice rates see "Apprentice- LABORER"							
VAC-HAUL	1/1/2026	$41.24	$16.17	$21.78	$0.00	$0.00	$79.19
TEAMSTERS JOINT COUNCIL NO. 10 TEAMSTERS JOINT COUNCIL NO. 10 ZONE B	6/1/2026	$42.24	$16.17	$21.78	$0.00	$0.00	$80.19
	12/1/2026	$42.24	$16.17	$23.52	$0.00	$0.00	$81.93
	1/1/2027	$42.24	$16.77	$23.52	$0.00	$0.00	$82.53
WAGON DRILL OPERATOR	12/1/2025	$36.25	$10.65	$9.75	$8.57	$0.00	$65.22
LABORERS LABORERS - ZONE 3 (BUILDING & SITE)	6/1/2026	$37.55	$10.65	$9.75	$8.57	$0.00	$66.52
	12/7/2026	$38.85	$10.65	$9.75	$8.57	$0.00	$67.82
	6/7/2027	$40.25	$10.65	$9.75	$8.57	$0.00	$69.22
	12/6/2027	$41.65	$10.65	$9.75	$8.57	$0.00	$70.62
	6/5/2028	$43.15	$10.65	$9.75	$8.57	$0.00	$72.12
	12/4/2028	$44.65	$10.65	$9.75	$8.57	$0.00	$73.62
For apprentice rates see "Apprentice- LABORER"							
WAGON DRILL OPERATOR (HEAVY & HIGHWAY)	12/1/2025	$36.24	$10.65	$9.75	$6.56	$0.00	$63.20
LABORERS LABORERS - ZONE 3 (HEAVY & HIGHWAY)	6/1/2026	$37.54	$10.65	$9.75	$6.56	$0.00	$64.50
	12/1/2026	$38.83	$10.65	$9.75	$6.56	$0.00	$65.79
For apprentice rates see "Apprentice- LABORER (Heavy and Highway)"							
WATER METER INSTALLER	9/17/2025	$52.26	$12.00	$10.85	$7.10	$0.00	$82.21
PLUMBERS & PIPEFITTERS LOCAL 104 PLUMBERS & PIPEFITTERS LOCAL 104	3/17/2026	$54.26	$12.00	$10.85	$7.10	$0.00	$84.21
	9/17/2026	$56.26	$12.00	$10.85	$7.10	$0.00	$86.21
	3/17/2027	$58.26	$12.00	$10.85	$7.10	$0.00	$88.21
	9/17/2027	$60.26	$12.00	$10.85	$7.10	$0.00	$90.21
	3/17/2028	$62.26	$12.00	$10.85	$7.10	$0.00	$92.21
	9/17/2028	$64.26	$12.00	$10.85	$7.10	$0.00	$94.21
	3/17/2029	$66.26	$12.00	$10.85	$7.10	$0.00	$96.21

Construction

Classification	Effective Date	Base Wage	Health	Pension	Annuity	Supplemental Unemployment	Total Rate
For apprentice rates see "Apprentice- PLUMBER/PIPEFITTER" or "PLUMBER/GASFITTER"							

Additional Apprentice Information

All apprentices must be registered with the Division of Apprenticeship Training(DAS) in accordance with M.G.L.c. 23, §§ 11E-11L. Minimum wage rates for apprentices employed on public works projects are listed above as a percentage of the hourly prevailing wage rate established by the Commissioner under the provisions of M.G.L.c. 149, §§ 26-27D.

Apprentice ratios are established by DAS pursuant to M.G.L.c. 23, §§ 11E-11L. Ratios are expressed as the allowable number of apprentices to journeymen or fraction thereof, unless otherwise specified. The ratios listed herein have been taken from relevant private collective bargaining agreements(CBAs) and are provided for illustrative purposes only. They have not been independently verified as being accurate or continuing to be accurate.

Parties having questions regarding what ratio to use should contact DAS.

DIVISION 01

SECTION 011000 - SUMMARY

PART 1 - GENERAL

1.1 RELATED DOCUMENTS

A. Drawings and general provisions of the Contract, including General and Supplementary Conditions and other Division 01 Specification Sections, apply to this Section.

1.2 SUMMARY

A. Section Includes:

1. Project information.
2. Work covered by Contract Documents.
3. Work by Owner.
4. Work under separate contracts.
5. Access to site.
6. Contractor use of premises.
7. Work restrictions.
8. Specification and drawing conventions.
9. Miscellaneous provisions.

1.3 PROJECT INFORMATION

A. Project Identification: Pioneer Valley Transit Authority (PVTA)

1. Project Location: UMass Transit Facility, 185 Holdsworth Way, Amherst MA 01002.

B. Owner: Pioneer Valley Transit Authority (PVTA).

C. Design Consultant: Architect: Wendel WD Architecture, Engineering, Surveying & Landscape Architecture, PC.

1.4 WORK COVERED BY CONTRACT DOCUMENTS

A. The Work of Project is defined by the Contract Documents and consists of the following:

1. The Pioneer Valley Transit Authority (PVTA) UMass Lift Replacement project is located on the UMass Amherst campus and consists of:
   a. Removal of an existing hydraulic bus lift and replacement with a new hydraulic bus lift in the chassis wash bay at PVTA's UMass Transit facility.
   b. The project includes concrete work, plumbing and electrical.
   c. The new lift is Owner provided and Contractor installed. Reference specification 144500 Vehicle Lifts for additional information.

B. Appendix B:
   1. The pre-design underground environmental assessment dated April 29, 2025 is included in the Project Manual as Appendix B.
   2. Based on this assessment, soil and groundwater excavated from the lift removal is environmentally suitable to be placed back into the excavation.
   3. If potentially unsuitable or contaminated soil or water is encountered, Contractor to notify Owner and Architect immediately in writing.
   4. Owner, in coordination with Owner's testing agency, to provide testing and direction for removal as required.
   5. See Section 012100 Allowances and 012200 Unit Prices.

C. Type of Contract:

   1. Project will be constructed under a MGL Chapter 149 lump sum, design-bid-build contract.

1.5 WORK BY OWNER

A. General: Cooperate fully with Owner so work may be carried out smoothly, without interfering with or delaying work under this Contract or work by Owner. Coordinate the Work of this Contract with work performed by Owner.

1.6 WORK UNDER SEPARATE CONTRACTS

A. General: Cooperate fully with other contractors on site so work on those contracts may be carried out smoothly, without interfering with or delaying work under this Contract or other contracts. Coordinate the Work of this Contract with work performed under separate contracts.

1.7 ACCESS TO SITE

A. General: Contractor shall have limited use of Project site for construction operations during construction period. Contractor to coordinate all work with Owner.

B. Use of Site: Limit use of Project site to areas within the Contract limits indicated. Do not disturb portions of Project site beyond areas in which the Work is indicated.

   1. Limits: Confine construction operations to areas of disturbance as required by contract documents.
   2. All work must be carefully coordinated with the Owner to avoid unscheduled or extended impacts to operations.

1.8 COORDINATION WITH OCCUPANTS

A. Full Owner Occupancy: Owner will occupy site and existing building(s) during entire construction period. Cooperate with Owner during construction operations to minimize conflicts

and facilitate Owner usage. Perform the Work so as not to interfere with Owner's day-to-day operations. Maintain existing exits unless otherwise indicated.

1.10 CONTRACTOR USE OF PREMISES

A. Use of the Site: Limit use of the premises to work in areas indicated. Confine operations to areas within contract limits indicated. Do not disturb portions of the site beyond the areas in which the Work is indicated.

B. Owner Occupancy: Allow for Owner occupancy and use by the public for the entire duration of the project. Owner's operations are continuous, 24 hours per day, 7 days per week, 365 days per year.

C. Driveways and Entrances: Keep driveways and entrances serving the premises clear and available to the Owner, the Owner's employees, and emergency vehicles at all times. Do not use these areas for parking or storage of materials. Schedule deliveries to minimize space and time requirements for storage of materials and equipment on-site.

D. All deliveries to the Contractor at the site must be accepted at the site by the Contractor, regardless of time of delivery. The Owner will not accept deliveries for the Contractor at any time.

E. Use of the Existing Building: Maintain the existing building in a weathertight condition throughout the construction period. Repair any damage caused by weather or construction operations. Take all precautions necessary to protect the building and its occupants during the construction period. Restore to new condition any lawn, pavement, sidewalk, etc., damage by construction and staging operations.

WORK RESTRICTIONS

A. Work Restrictions, General: Comply with restrictions on construction operations.

B. On-Site Work Hours: Limit work on the site and in the building to Monday through Friday, 7:00 AM to 3:30 PM local time.

C. Existing Utility Interruptions: Do not interrupt utilities serving facilities occupied by adjacent owners or others unless permitted under the following conditions and then only after providing temporary utility services according to requirements indicated:

1. Notify Architect and Owner not less than two weeks in advance of proposed utility interruptions.
2. Obtain Architect and Owner written permission before proceeding with utility interruptions.

D. Nonsmoking Building: Smoking is not permitted on the project site at any time. There will be no exceptions.

E. Controlled Substances: Use of tobacco products and other controlled substances on the Project site is not permitted.

1.11 SPECIFICATION AND DRAWING CONVENTIONS

A. Specification Content: The Specifications use certain conventions for the style of language and the intended meaning of certain terms, words, and phrases when used in particular situations. These conventions are as follows:

1. Abbreviated Language: Language used in the Specifications and other Contract Documents are abbreviated. Words and meanings shall be interpreted as appropriate. Words implied, but not stated, shall be inferred as the sense requires. Singular words shall be interpreted as plural, and plural words shall be interpreted as singular where applicable as the context of the Contract Documents indicates.
2. Imperative mood and streamlined language are generally used in the Specifications. Requirements expressed in the imperative mood are to be performed by Contractor. Occasionally, the indicative or subjunctive mood may be used in the Section Text for clarity to describe responsibilities that must be fulfilled indirectly by Contractor or by others when so noted.

    a. The words "shall," "shall be," or "shall comply with," depending on the context, are implied where a colon (:) is used within a sentence or phrase.

3. Specification requirements are to be performed by Contractor unless specifically stated otherwise.

B. Division 01 General Requirements: Requirements of Sections in Division 01 apply to the Work of all Sections in the Specifications.

C. Drawing Coordination: Requirements for materials and products identified on Drawings are described in detail in the Specifications. One or more of the following are used on Drawings to identify materials and products:

1. Terminology: Materials and products are identified by the typical generic terms used in the individual Specifications Sections.
2. Abbreviations: Materials and products are identified by abbreviations scheduled on Drawings.
3. Keynoting: Materials and products are identified by reference keynotes referencing Specification Section numbers found in this Project Manual.

1.12 MISCELLANEOUS PROVISIONS

A. Copies of Drawings and Project Manuals: The Contractor is required to obtain the number of copies of the Drawings and Project Manual it requires for construction of the project. The Owner will not reimburse the Contractor for these copies.

B. Licensed Contractors/Subcontractors: All Subcontractors must be licensed to work in Hampshire County, Massachusetts in each of their perspective fields of work on the Project.

PART 2 - PRODUCTS (Not Used)

PART 3 - EXECUTION (Not Used)

END OF SECTION 011000

SECTION 012100 - ALLOWANCES

PART 1 - GENERAL

1.1 RELATED DOCUMENTS

A. Drawings and general provisions of the Contract including General and Supplementary Conditions and other Division 01 Specification Sections apply to this Section.

1.2 SUMMARY

A. Section includes administrative and procedural requirements governing allowances.

1. Certain items are specified in the Contract Documents by allowances. Allowances have been established in lieu of additional requirements and to defer selection of actual materials and equipment to a later date when direction will be provided to Contractor by the Architect. Additional requirements will be issued by Change Order, if any, by the Architect.

B. Types of allowances include the following:

1. Contingency Allowances.
2. Quantity Allowances.
3. Lump-sum allowances.

1.3 SELECTION AND PURCHASE

A. At the earliest practical date after award of the Contract, inform Architect of the date when final selection and purchase of each product or system described by an allowance must be completed to avoid delaying the Work.

B. At Architect's request, obtain proposals for each allowance for use in making final selections. Include recommendations that are relevant to performing the Work.

C. Purchase products and systems selected by Architect from the designated supplier.

1.4 ACTION SUBMITTALS

A. Submit proposals for purchase of products or systems included in allowances, in the form specified for Change Orders.

1.5 INFORMATIONAL SUBMITTALS

A. Submit invoices or delivery slips to show actual quantities of materials delivered to the site for use in fulfillment of each allowance.

B. Submit time sheets and other documentation to show labor time and cost for installation of allowance items that include installation as part of the allowance.

C. Coordinate and process submittals for allowance items in same manner as for other portions of the Work.

1.6 COORDINATION

A. Coordinate allowance items with other portions of the Work. Furnish templates as required to coordinate installation.

1.7 QUANTITY ALLOWANCES

A. Allowance shall include cost to Contractor of specific products and materials ordered by Owner or selected by Architect under allowance and shall include freight and delivery to Project site.

B. Unless otherwise indicated, Contractor's costs for receiving and handling at Project site, labor, installation, overhead and profit, and similar costs related to products and materials ordered by Owner or selected by Architect under allowance shall be included as part of the Contract Sum and not part of the allowance.

C. Unused Materials: Return unused materials purchased under an allowance to manufacturer or supplier for credit to Owner, after installation has been completed and accepted.

D. Allowance Adjustment: To adjust allowance amounts, submit a Change Order proposal based on the difference between purchase amount and the allowance, multiplied by final measurement of work-in-place where applicable. If applicable, include reasonable allowances for cutting losses, tolerances, mixing wastes, normal product imperfections, and similar margins.

1. Include installation costs in purchase amount only where indicated as part of the allowance.
2. If requested, prepare explanation and documentation to substantiate distribution of overhead costs and other margins claimed.
3. Submit substantiation of a change in scope of work, if any, claimed in Change Orders related to unit-cost allowances.
4. Owner reserves the right to establish the quantity of work-in-place by independent quantity survey, measurement or count.

E. Submit claims for increased costs because of a change in scope or nature of the allowance described in the Contract Documents, whether for the purchase order amount or Contractor's handling, labor, installation, overhead, and profit.

1. Do not include Contractor's or subcontractor's indirect expense in the Change Order cost amount unless it is clearly shown that the nature or extent of work has changed from what could have been foreseen from information in the Contract Documents.
2. No change to Contractor's indirect expense is permitted for selection of higher- or lower-priced materials or systems of the same scope and nature as originally indicated.

F. At the time of Substantial Completion, any unused amounts in Allowances shall be returned to Owner in the form of a credit Change Order.

PART 2 - PRODUCTS (Not Used)

PART 3 - EXECUTION

3.1 EXAMINATION

A. Examine products covered by an allowance promptly on delivery for damage or defects. Return damaged or defective products to manufacturer for replacement.

3.2 PREPARATION

A. Coordinate materials and their installation for each allowance with related materials and installations to ensure that each allowance item is completely integrated and interfaced with related work.

3.3 SCHEDULE OF ALLOWANCES

A. Allowance No. 01: Contingency Allowance: Include the sum of Fifteen Thousand Dollars ($15,000.00) for excavation, stockpiling, transport, and disposal of unsuitable soil (as directed by the Owner’s testing agency) and replacement with compacted Subbase Material as required, according to Section 310000 “earth Moving”.
1. This allowance includes material cost, receiving, handling, and disposal, and Contractor overhead and profit.
2. Unused amounts may be reallocated to project improvements upon review / recommendation from Architect, and approval by the Owner.

B. Allowance No. 02: Contingency Allowance: Include the sum of Fifteen Thousand Dollars ($15,000.00) for the mobilization of dewatering equipment, excavation dewatering, transportation and disposal of dewatered groundwater, and demobilization of dewatering equipment.

1. This allowance includes material cost, receiving, handling, and installation and Contractor overhead and profit.
2. Unused amounts may be reallocated to project improvements upon review / recommendation from Architect, and approval by the Owner.

END OF SECTION 012100

THIS PAGE INTENTIONALLY LEFT BLANK

SECTION 012200 - UNIT PRICES

PART 1 - GENERAL

1.1 RELATED DOCUMENTS

A. Drawings and general provisions of the Contract, including General and Supplementary Conditions and other Division 01 Specification Sections, apply to this Section.

1.2 SUMMARY

A. Section includes administrative and procedural requirements for unit prices.

1.3 DEFINITIONS

A. Unit price is an amount proposed by bidders, stated on the Bid or Proposal Form, incorporated in the Agreement and applicable during the duration of the Work as a price per unit of measurement for materials, equipment, or services, or a portion of the Work, added to or deducted from the Contract Sum by appropriate modification, if the scope of Work or estimated quantities of Work required by the Contract Documents are increased or decreased.

B. Bidders are advised that quantity allowances of work, if specified in the Contract Documents, are approximate only and are subject to increase or decrease, and that the work shall be performed at the Unit Prices stated on the Bid or Proposal Form whether the quantities are increased or decreased.

1.4 PROCEDURES

A. Unit prices include all necessary and incidental material, plus cost for delivery, installation, rental, insurance, applicable taxes, overhead, and profit and similar costs.

B. Measurement and Payment: See individual Specification Sections for work that requires establishment of unit prices. Methods of measurement and payment for unit prices are specified in those Sections.

C. Owner reserves the right question or to reject Contractor's measurement of work-in-place that involves use of established unit prices and to have this work measured, at Owner's expense, by the Owner’s designated representative.

D. List of Unit Prices: A schedule of unit prices is included in Part 3. Specification Sections referenced in the schedule contain requirements for materials described under each unit price.

PART 2 - PRODUCTS (Not Used)

PART 3 - EXECUTION

3.1 SCHEDULE OF UNIT PRICES

A. Unit Price No. 01: Unsuitable soil - Stockpile.

1. Description: Unsuitable soil excavation (as directed by Owner's testing agency) and stockpile on-site and replacement with compacted Subbase Material as required, according to Section 310000 "Earth Moving".
2. Unit of Measurement: Cubic yard of soil excavated, based on survey of volume removed.

B. Unit Price No. 01: Unsuitable soil – Transport and Dispose.

1. Description: Unsuitable soil excavation (as directed by Owner's testing agency), transport and disposal off site to Ondrick Materials and Recycling in Chicopee, MA and replacement with compacted Subbase Material as required, according to Section 310000 "Earth Moving".
2. Unit of Measurement: Cubic yard of soil excavated, based on survey of volume removed.

END OF SECTION 012200

SECTION 012500 - SUBSTITUTION PROCEDURES

PART 1 - GENERAL

1.1 SUMMARY

A. Section includes administrative and procedural requirements for substitutions.

B. Related Requirements:

1. Document 002600 "Procurement Substitution Procedures" for requirements for substitution requests prior to award of Contract.

1.2 DEFINITIONS

A. Substitutions: Changes in products, materials, equipment, and methods of construction from those required by the Contract Documents and proposed by Contractor.

1. Substitutions for Cause: Changes proposed by Contractor that are required due to changed Project conditions, such as unavailability of product, regulatory changes, or unavailability of required warranty terms.
2. Substitutions for Convenience: Changes proposed by Contractor or Owner that are not required in order to meet other Project requirements but may offer advantage to Contractor or Owner.

1.3 ACTION SUBMITTALS

A. Substitution Requests: Submit three copies of each request for consideration. Identify product or fabrication or installation method to be replaced. Include Specification Section number and title and Drawing numbers and titles.

1. Substitution Request Form: Use form acceptable to Architect.
2. Documentation: Show compliance with requirements for substitutions and the following, as applicable:

a. Statement indicating why specified product or fabrication or installation method cannot be provided, if applicable.
b. Coordination of information, including a list of changes or revisions needed to other parts of the Work and to construction performed by Owner and separate contractors that will be necessary to accommodate proposed substitution.
c. Detailed comparison of significant qualities of proposed substitutions with those of the Work specified. Include annotated copy of applicable Specification Section. Significant qualities may include attributes, such as performance, weight, size, durability, visual effect, sustainable design characteristics, warranties, and specific

features and requirements indicated. Indicate deviations, if any, from the Work specified.

d. Product Data, including drawings and descriptions of products and fabrication and installation procedures.
e. Samples, where applicable or requested.
f. Certificates and qualification data, where applicable or requested.
g. List of similar installations for completed projects, with project names and addresses as well as names and addresses of architects and owners.
h. Material test reports from a qualified testing agency, indicating and interpreting test results for compliance with requirements indicated.
i. Research reports evidencing compliance with building code in effect for Project.
j. Detailed comparison of Contractor's construction schedule using proposed substitutions with products specified for the Work, including effect on the overall Contract Time. If specified product or method of construction cannot be provided within the Contract Time, include letter from manufacturer, on manufacturer's letterhead, stating date of receipt of purchase order, lack of availability, or delays in delivery.
k. Cost information, including a proposal of change, if any, in the Contract Sum.
l. Contractor's certification that proposed substitution complies with requirements in the Contract Documents, except as indicated in substitution request, is compatible with related materials and is appropriate for applications indicated.
m. Contractor's waiver of rights to additional payment or time that may subsequently become necessary because of failure of proposed substitution to produce indicated results.

3. Architect's Action: If necessary, Architect will request additional information or documentation for evaluation within seven days of receipt of a request for substitution. Architect will notify Contractor of acceptance or rejection of proposed substitution within 15 days of receipt of request, or seven days of receipt of additional information or documentation, whichever is later.

a. Forms of Acceptance: Change Order, Construction Change Directive, or Architect's Supplemental Instructions for minor changes in the Work.
b. Use product specified if Architect does not issue a decision on use of a proposed substitution within time allocated.

1.4 QUALITY ASSURANCE

A. Compatibility of Substitutions: Investigate and document compatibility of proposed substitution with related products and materials. Engage a qualified testing agency to perform compatibility tests recommended by manufacturers.

1.5 PROCEDURES

A. Coordination: Revise or adjust affected work as necessary to integrate work of the approved substitutions.

1.6 SUBSTITUTIONS

A. Substitutions for Cause: Submit requests for substitution immediately on discovery of need for change, but not later than 15 days prior to time required for preparation and review of related submittals.

1. Conditions: Architect will consider Contractor's request for substitution when the following conditions are satisfied. If the following conditions are not satisfied, Architect will return requests without action, except to record noncompliance with these requirements:

a. Requested substitution is consistent with the Contract Documents and will produce indicated results.
b. Substitution request is fully documented and properly submitted.
c. Requested substitution will not adversely affect Contractor's construction schedule.
d. Requested substitution has received necessary approvals of authorities having jurisdiction.
e. Requested substitution is compatible with other portions of the Work.
f. Requested substitution has been coordinated with other portions of the Work.
g. Requested substitution provides specified warranty.
h. If requested substitution involves more than one contractor, requested substitution has been coordinated with other portions of the Work, is uniform and consistent, is compatible with other products, and is acceptable to all contractors involved.

B. Substitutions for Convenience: Not allowed.

PART 2 - PRODUCTS (Not Used)

PART 3 - EXECUTION (Not Used)

END OF SECTION 012500

SECTION 012600 - CONTRACT MODIFICATION PROCEDURES

PART 1 - GENERAL

1.1 RELATED DOCUMENTS

A. Drawings and general provisions of the Contract, including General and Supplementary Conditions and other Division 01 Specification Sections, apply to this Section.

1.2 SUMMARY

A. Section includes administrative and procedural requirements for handling and processing Contract modifications.

1.3 MINOR CHANGES IN THE WORK

A. Architect will issue supplemental instructions authorizing minor changes in the Work, not involving adjustment to the Contract Sum or the Contract Time, on AIA Document G710, "Architect's Supplemental Instructions."

1.4 PROPOSAL REQUESTS

A. Owner-Initiated Proposal Requests: Architect will issue a description of proposed changes in the Work that may require adjustment to the Contract Sum or the Contract Time. If necessary, the description will include supplemental or revised Drawings and Specifications.

1. Work Change Proposal Requests issued by Architect are not instructions either to stop work in progress or to execute the proposed change.
2. Within 14 calendar days after receipt of Proposal Request, submit a quotation estimating cost adjustments to the Contract Sum and the Contract Time necessary to execute the change.

    a. Include a list of quantities of products required or eliminated and unit costs, with total amount of purchases and credits to be made. If requested, furnish survey data to substantiate quantities.
    b. Indicate applicable taxes, delivery charges, equipment rental, and amounts of trade discounts.
    c. Include costs of labor and supervision directly attributable to the change.
    d. Include an updated Contractor's construction schedule that indicates the effect of the change, including, but not limited to, changes in activity duration, start and finish times, and activity relationship. Use available total float before requesting an extension of the Contract Time.
    e. Quotation Form: Use forms acceptable to Architect.

B. Contractor-Initiated Proposals: If latent or changed conditions require modifications to the Contract, Contractor may initiate a claim by submitting a request for a change to Architect.

1. Include a statement outlining reasons for the change and the effect of the change on the Work. Provide a complete description of the proposed change. Indicate the effect of the proposed change on the Contract Sum and the Contract Time.
2. Include a list of quantities of products required or eliminated and unit costs, with total amount of purchases and credits to be made. If requested, furnish survey data to substantiate quantities.
3. Indicate applicable taxes, delivery charges, equipment rental, and amounts of trade discounts.
4. Include costs of labor and supervision directly attributable to the change.
5. Include an updated Contractor's construction schedule that indicates the effect of the change, including, but not limited to, changes in activity duration, start and finish times, and activity relationship. Use available total float before requesting an extension of the Contract Time.
6. Proposal Request Form: Use form acceptable to Architect.

1.5 ADMINISTRATIVE CHANGE ORDERS

A. Allowance Adjustment: See Section 012100 "Allowances" if included for administrative procedures for preparation of Change Order Proposal for adjusting the Contract Sum to reflect actual costs of allowances.

B. Unit-Price Adjustment: See Section 012200 "Unit Prices" if included for administrative procedures for preparation of Change Order Proposal for adjusting the Contract Sum to reflect measured scope of unit-price work.

1.6 CHANGE ORDER PROCEDURES

A. On Owner's approval of a Work Changes Proposal Request, Architect will issue a Change Order for signatures of Owner and Contractor on AIA Document G701.

1.7 CONSTRUCTION CHANGE DIRECTIVE

A. Construction Change Directive: Architect may issue a Construction Change Directive on AIA Document G714 Construction Change Directive instructs Contractor to proceed with a change in the Work, for subsequent inclusion in a Change Order.

1. Construction Change Directive contains a complete description of change in the Work. It also designates method to be followed to determine change in the Contract Sum or the Contract Time.

B. Documentation: Maintain detailed records on a time and material basis of work required by the Construction Change Directive.

1. After completion of change, submit an itemized account and supporting data necessary to substantiate cost and time adjustments to the Contract.

PART 2 - PRODUCTS (Not Used)

PART 3 - EXECUTION (Not Used)

END OF SECTION 012600

THIS PAGE INTENTIONALLY LEFT BLANK

SECTION 012900 - PAYMENT PROCEDURES

PART 1 - GENERAL

1.1 RELATED DOCUMENTS

A. Drawings and general provisions of the Contract, including General and Supplementary Conditions and other Division 01 Specification Sections, apply to this Section.

1.2 SUMMARY

A. Section includes administrative and procedural requirements necessary to prepare and process Applications for Payment.

B. Related Requirements:

1. Section 012600 "Contract Modification Procedures" for administrative procedures for handling changes to the Contract.
2. Section 013200 "Construction Progress Documentation" for administrative requirements governing the preparation and submittal of the Contractor's construction schedule.

1.3 DEFINITIONS

A. Schedule of Values: A statement furnished by Contractor allocating portions of the Contract Sum to various portions of the Work and used as the basis for reviewing Contractor's Applications for Payment.

1.4 SCHEDULE OF VALUES

A. Coordination: Coordinate preparation of the schedule of values with preparation of Contractor's construction schedule.

1. Coordinate line items in the schedule of values with other required administrative forms and schedules, including the following:

a. Application for Payment forms with continuation sheets.
b. Submittal schedule.
c. Items required to be indicated as separate activities in Contractor's construction schedule.

2. Submit the schedule of values to Architect at earliest possible date, but no later than seven days before the date scheduled for submittal of initial Applications for Payment.

3. Sub-schedules for Separate Elements of Work: Where the Contractor's construction schedule defines separate elements of the Work, provide sub schedules showing values coordinated with each element.

B. Format and Content: Use Project Manual table of contents as a guide to establish line items for the schedule of values. Provide at least one line item for each Specification Section.

1. Identification: Include the following Project identification on the schedule of values:

    a. Project name and location.
    b. Name of Architect.
    c. Architect's project number.
    d. Contractor's name and address.
    e. Date of submittal.

2. Arrange schedule of values consistent with format of AIA Document G703
3. Provide a breakdown of the Contract Sum in enough detail to facilitate continued evaluation of Applications for Payment and progress reports. Coordinate with Project Manual table of contents. Provide multiple line items for principal subcontract amounts in excess of five percent of the Contract Sum.

    a. Provide Davis Bacon Wages payrolls and certifications.

4. Round amounts to nearest whole dollar; total shall equal the Contract Sum.
5. Provide a separate line item in the schedule of values for each part of the Work where Applications for Payment may include materials or equipment purchased or fabricated and stored, but not yet installed.

    a. Differentiate between items stored on-site and items stored off-site. Provide evidence of insurance.

6. Provide separate line items in the schedule of values for initial cost of materials, for each subsequent stage of completion, and for total installed value of that part of the Work.
7. Each item in the schedule of values and Applications for Payment shall be complete. Include total cost and proportionate share of general overhead and profit for each item.

    a. Temporary facilities and other major cost items that are not direct cost of actual work-in-place may be shown either as separate line items in the schedule of values or distributed as general overhead expense, at Contractor's option.

8. Retainage

    a. In the construction phase of this contract a 5% retainage will be withheld from each payment of invoice until the maximum retained amount equals five (5) percent of the total GMP.

9. Schedule Updating: Update and resubmit the schedule of values before the next Applications for Payment when Change Orders or Construction Change Directives result in a change in the Contract Sum.

1.5 APPLICATIONS FOR PAYMENT

A. Each Application for Payment following the initial Application for Payment shall be consistent with previous applications and payments as certified by Architect and paid for by Owner.

1. Initial Application for Payment, Application for Payment at time of Substantial Completion, and final Application for Payment involve additional requirements.

B. Payment Application Times: Submit Application for Payment to Architect on date specified by Owner of each month. The period covered by each Application for Payment is one month, ending on the last day of the month.

1. Submit draft copy of Application for Payment seven days prior to due date for review by Architect.

C. Application for Payment Forms: Use AIA Document G702and AIA Document G703 as form for Applications for Payment.

D. Application Preparation: Complete every entry on form. Notarize and execute by a person authorized to sign legal documents on behalf of Contractor. Architect will return incomplete applications without action.

1. Entries shall match data on the schedule of values and Contractor's construction schedule. Use updated schedules if revisions were made.
2. Include amounts for work completed following previous Application for Payment, whether or not payment has been received. Include only amounts for work completed at time of Application for Payment.
3. Include amounts of Change Orders and Construction Change Directives issued before last day of construction period covered by application.
4. Indicate separate amounts for work being carried out under Owner-requested project acceleration.

E. Stored Materials: Include in Application for Payment amounts applied for materials or equipment purchased or fabricated and stored, but not yet installed. Differentiate between items stored on-site and items stored off-site.

1. Provide certificate of insurance and evidence of transfer of title to Owner, for stored materials.
2. Provide supporting documentation that verifies amount requested, such as paid invoices. Match amount requested with amounts indicated on documentation; do not include overhead and profit on stored materials.
3. Provide summary documentation for stored materials indicating the following:

    a. Value of materials previously stored and remaining stored as of date of previous Applications for Payment.
    b. Value of previously stored materials put in place after date of previous Application for Payment and on or before date of current Application for Payment.
    c. Value of materials stored since date of previous Application for Payment and remaining stored as of date of current Application for Payment.

F. Transmittal: Submit three signed and notarized original copies of each Application for Payment to Architect by a method ensuring receipt within 24 hours. One copy shall include waivers of lien and similar attachments if required.

1. Transmit each copy with a transmittal form listing attachments and recording appropriate information about application.

G. Waivers of Mechanic's Lien: With each Application for Payment, submit waivers of mechanic's liens from subcontractors, sub-subcontractors, and suppliers for construction period covered by the previous application.

1. Submit partial waivers on each item for amount requested in previous application, after deduction for retainage, on each item.
2. When an application shows completion of an item, submit conditional final or full waivers.
3. Owner reserves the right to designate which entities involved in the Work must submit waivers.
4. Submit final Application for Payment with or preceded by conditional final waivers from every entity involved with performance of the Work covered by the application who is lawfully entitled to a lien.
5. Waiver Forms: Submit executed waivers of lien on forms, acceptable to Owner.

H. Initial Application for Payment: Administrative actions and submittals that must precede or coincide with submittal of first Application for Payment include the following:

1. List of subcontractors.
2. List of principal suppliers and fabricators.
3. Schedule of values.
4. Contractor's construction schedule (preliminary if not final).
5. Products list (preliminary if not final).
6. Schedule of unit prices.
7. Submittal schedule (preliminary if not final).
8. List of Contractor's staff assignments.
9. Davis Bacon Wages and Commonwealth of MA Prevailing Wage Rates payrolls and certification.
10. Copies of authorizations and licenses from authorities having jurisdiction for performance of the Work.
11. Initial progress report.
12. Report of preconstruction conference.
13. Certificates of insurance and insurance policies.
14. Performance and payment bonds.
15. Data needed to acquire Owner's insurance.

I. Application for Payment at Substantial Completion: After Architect issues the Certificate of Substantial Completion, submit an Application for Payment showing 100 percent completion for portion of the Work claimed as substantially complete.

1. Include documentation supporting claim that the Work is substantially complete and a statement showing an accounting of changes to the Contract Sum.

2. This application shall reflect Certificate(s) of Substantial Completion issued previously for Owner occupancy of designated portions of the Work.

J. Final Payment Application: After completing Project closeout requirements, submit final Application for Payment with releases and supporting documentation not previously submitted and accepted, including, but not limited, to the following:

1. Evidence of completion of Project closeout requirements.
2. Insurance certificates for products and completed operations where required and proof that taxes, fees, and similar obligations were paid.
3. Updated final statement, accounting for final changes to the Contract Sum.
4. AIA Document G706, "Contractor's Affidavit of Payment of Debts and Claims."
5. AIA Document G706A, "Contractor's Affidavit of Release of Liens."
6. AIA Document G707, "Consent of Surety to Final Payment."
7. AIA Document G707A, “Consent of Surety to Final Reduction in or Partial Release of Retainage.”
8. Evidence that claims have been settled.
9. Final meter readings for utilities, a measured record of stored fuel, and similar data as of date of Substantial Completion or when Owner took possession of and assumed responsibility for corresponding elements of the Work.

PART 2 - PRODUCTS (Not Used)

PART 3 - EXECUTION (Not Used)

END OF SECTION 012900

SECTION 013100 - PROJECT MANAGEMENT AND COORDINATION

PART 1 - GENERAL

1.1 RELATED DOCUMENTS

A. Drawings and general provisions of the Contract, including General and Supplementary Conditions and other Division 01 Specification Sections, apply to this Section.

1.2 SUMMARY

A. Section includes administrative provisions for coordinating construction operations on Project including, but not limited to, the following:

1. General coordination procedures.
2. Requests for Information (RFIs).
3. Project meetings.

B. Each contractor shall cooperate and participate in coordination requirements. Certain areas of responsibility are assigned to a specific contractor.

1.3 DEFINITIONS

A. RFI: Request from Owner, Architect or Contractor seeking information required by or clarifications of the Contract Documents.

1.4 INFORMATIONAL SUBMITTALS

A. Subcontract List: Prepare a written summary identifying individuals or firms proposed for each portion of the Work, including those who are to furnish products or equipment fabricated to a special design. Include the following information in tabular form:

1. Name, address, and telephone number of entity performing subcontract or supplying products.
2. Description of work to be performed.

B. Key Personnel Names: Within 7 calendar days of starting construction operations, submit a list of key personnel assignments, including superintendent and other personnel in attendance at Project site. Identify individuals and their duties and responsibilities; list addresses and telephone numbers, including, office, and cellular telephone numbers and e-mail addresses. Provide names and telephone numbers of individuals assigned as alternates in the absence of individuals assigned to Project.
1. Provide resumes of management personnel including dates of employment and project lists. The resumes of management personnel will be subject to the Owner’s approval. The Owner reserves the right to remove individuals from the Project.

1.5 GENERAL COORDINATION PROCEDURES

A. Coordination: Coordinate construction operations included in different Sections of the Specifications to ensure efficient and orderly installation of each part of the Work. Coordinate construction operations, included in different Sections that depend on each other for proper installation, connection, and operation.

1. Schedule construction operations in sequence required to obtain the best results where installation of one part of the Work depends on installation of other components, before or after its own installation.
2. Coordinate installation of different components to ensure maximum performance and accessibility for required maintenance, service, and repair.
3. Make adequate provisions to accommodate items scheduled for later installation.

B. Prepare memoranda for distribution to each party involved, outlining special procedures required for coordination. Include such items as required notices, reports, and list of attendees at meetings.

1. Prepare similar memoranda for Owner and separate contractors if coordination of their Work is required.

C. Administrative Procedures: Coordinate scheduling and timing of required administrative procedures with other construction activities to avoid conflicts and to ensure orderly progress of the Work. Such administrative activities include, but are not limited to, the following:

1. Preparation of Contractor's construction schedule.
2. Preparation of the schedule of values.
3. Installation and removal of temporary facilities and controls.
4. Delivery and processing of submittals.
5. Progress meetings.
6. Preinstallation conferences.
7. Project closeout activities.
8. Startup and adjustment of systems.

D. Conservation: Coordinate construction activities to ensure that operations are carried out with consideration given to conservation of energy, water, and materials. Coordinate use of temporary utilities to minimize waste.

1. Salvage materials and equipment involved in performance of, but not actually incorporated into, the Work. See other Sections for disposition of salvaged materials that are designated as Owner's property.

1.6 REQUESTS FOR INFORMATION (RFIs)

A. General: Immediately on discovery of the need for additional information or interpretation of the Contract Documents, Contractor shall prepare and submit an RFI in the form specified.

1. Architect will return RFIs submitted to Architect by other entities controlled by Contractor with no response.

2. Coordinate and submit RFIs in a prompt manner so as to avoid delays in Contractor's work or work of subcontractors.
3. Architect will not review RFI's submitted via fax or verbal requests.

B. Content of the RFI: Include a detailed, legible description of item needing information or interpretation and the following:

1. Project name.
2. Project number.
3. Date.
4. Name of Contractor.
5. Name of Architect.
6. RFI number, numbered sequentially.
7. RFI subject.
8. Specification Section number and title and related paragraphs, as appropriate.
9. Drawing number and detail references, as appropriate.
10. Field dimensions and conditions, as appropriate.
11. Contractor's suggested resolution. If Contractor's suggested resolution impacts the Contract Time or the Contract Sum, Contractor shall state impact in the RFI.
12. Contractor's signature.
13. Attachments: Include sketches, descriptions, measurements, photos, Product Data, Shop Drawings, coordination drawings, and other information necessary to fully describe items needing interpretation.

    a. Include dimensions, thicknesses, structural grid references, and details of affected materials, assemblies, and attachments on attached sketches.

C. RFI Forms: Form provided by the Architect.

1. Attachments shall be electronic files in Adobe Acrobat PDF format.

D. Architect's Action: Architect will review each RFI, determine action required, and respond. Allow five business days for Architect's response for each RFI. Architect will review each RFI determine action required and respond. Allow five business days for Architect's response for each RFI. RFIs received by Architect after 1:00 p.m. will be considered as received the following business day.

1. The following Contractor-generated RFIs will be returned without action:

    a. Requests for approval of submittals.
    b. Requests for approval of substitutions.
    c. Requests for approval of Contractor's means and methods.
    d. Requests for coordination information already indicated in the Contract Documents.
    e. Requests for adjustments in the Contract Time or the Contract Sum.
    f. Requests for interpretation of Architect's actions on submittals.
    g. Incomplete RFIs or inaccurately prepared RFIs.

2. Architect's action may include a request for additional information, in which case Architect's time for response will date from time of receipt of additional information.

3. Architect's action on RFIs that may result in a change to the Contract Time or the Contract Sum may be eligible for Contractor to submit Change Proposal according to Section 012600 "Contract Modification Procedures."

    a. If Contractor believes the RFI response warrants change in the Contract Time or the Contract Sum, notify Architect in writing within 10 business days of receipt of the RFI response.

E. RFI Log: Prepare, maintain, and submit a tabular log of RFIs organized by the RFI number. Submit log weekly. Include the following:

1. Project name.
2. Name and address of Contractor.
3. Name and address of Architect.
4. RFI number including RFIs that were returned without action or withdrawn.
5. RFI description.
6. Date the RFI was submitted.
7. Date Architect's response was received.

F. On receipt of Architect's action, update the RFI log and immediately distribute the RFI response to affected parties. Review response and notify Architect within five business days if Contractor disagrees with response.

1. Identification of related Minor Change in the Work, Construction Change Directive, and Proposal Request, as appropriate.

1.7 PROJECT MEETINGS

A. General: Where indicated, the contractor shall schedule and conduct meetings and conferences at Project site unless otherwise indicated.

1. Attendees: The Contractor shall inform participants and others involved, and individuals whose presence is required, of date and time of each meeting. Notify Owner and Architect of scheduled meeting dates and times.
2. Agenda: The Contractor shall prepare the meeting agenda. Distribute the agenda to all invited attendees.
3. Minutes: The Contractor shall be responsible for conducting meeting and will record significant discussions and agreements achieved. The Contractor shall distribute the meeting minutes to everyone concerned, including Owner**,** and Architect, within three business days of the meeting.

B. Preconstruction Conference: Architect will schedule and conduct a preconstruction conference before starting construction, at a time convenient to Owner and Architect, but no later than 5 business days after execution of the Agreement.

1. Conduct the conference to review responsibilities and personnel assignments.

2. Attendees: Authorized representatives of Owner**,** Architect, and their consultants; Contractor and its superintendent; major subcontractors; suppliers; and other concerned parties shall attend the conference. Participants at the conference shall be familiar with Project and authorized to conclude matters relating to the Work.
3. Agenda: Discuss items of significance that could affect progress, including the following:

    a. Tentative construction schedule.
    b. Phasing.
    c. Critical work sequencing and long-lead items.
    d. Designation of key personnel and their duties.
    e. Lines of communications.
    f. Procedures for processing field decisions and Change Orders.
    g. Procedures for RFIs.
    h. Procedures for testing and inspecting.
    i. Procedures for processing Applications for Payment.
    j. Distribution of the Contract Documents.
    k. Submittal procedures.
    l. Preparation of record documents.
    m. Use of the premises and existing building.
    n. Work restrictions.
    o. Working hours.
    p. Owner's occupancy requirements.
    q. Responsibility for temporary facilities and controls.
    r. Procedures for moisture and mold control.
    s. Procedures for disruptions and shutdowns.
    t. Construction waste management and recycling.
    u. Parking availability.
    v. Office, work, and storage areas.
    w. Equipment deliveries and priorities.
    x. First aid.
    y. Security.
    z. Progress cleaning.

4. Minutes: Entity responsible for conducting meeting will record and distribute meeting minutes.

C. Progress Meetings: OPM will conduct progress meetings at weekly intervals minimally.

1. Coordinate dates of meetings with preparation of payment requests.
2. Attendees: In addition to representatives of Owner, Owner's Commissioning Authority, if applicable, and Architect, each contractor, subcontractor, supplier, and other entity concerned with current progress or involved in planning, coordination, or performance of future activities shall be represented at these meetings. All participants at the meeting shall be familiar with Project and authorized to conclude matters relating to the Work.
3. Agenda: Review and correct or approve minutes of previous progress meeting. Review other items of significance that could affect progress. Include topics for discussion as appropriate to status of Project.

a. Contractor's Construction Schedule: Review progress since the last meeting. Determine whether each activity is on time, ahead of schedule, or behind schedule, in relation to Contractor's construction schedule. Determine how construction behind schedule will be expedited; secure commitments from parties involved to do so. Discuss whether schedule revisions are required to ensure that current and subsequent activities will be completed within the Contract Time.

1) Review schedule for next period.

b. Review present and future needs of each entity present, including the following:

1) Two-week look-ahead schedule.
2) Interface requirements.
3) Sequence of operations.
4) Status of submittals.
5) Deliveries.
6) Off-site fabrication.
7) Access.
8) Site utilization.
9) Temporary facilities and controls.
10) Progress cleaning.
11) Quality and work standards.
12) Status of correction of deficient items.
13) Field observations.
14) Status of RFIs.
15) Status of proposal requests.
16) Pending changes.
17) Status of Change Orders.
18) Pending claims and disputes.
19) Documentation of information for payment requests.

4. Minutes: The OPM shall record and distribute the meeting minutes to each party present and to parties requiring information.

a. Schedule Updating: Revise Contractor's construction schedule after each progress meeting where revisions to the schedule have been made or recognized. Issue revised schedule concurrently with the report of each meeting.

PART 2 - PRODUCTS (Not Used)

PART 3 - EXECUTION (Not Used)

END OF SECTION 013100

REQUEST FORM FOR ELECTRONIC FILES

Requesting Entity Name ("Recipient")		**Name of Requesting Entity's Representative**	

Project Name	PVTA UMass Lift Replacement
Project Location	185 Holdsworth Way, Amherst, MA
Wendel Project Number	448715

Electronic Files		
Copies	**Date/Version**	**Name/Description of File**
(If more space is needed attach a list of the requested files hereto.)		

Purpose of Request:

Processing Fee: **$0.00**

In order to request electronic files from Wendel WD Architecture, Engineering, Surveying & Landscape Architecture P.C., (hereinafter "Wendel") this Request Form must be submitted to Wendel, fully executed and with no modifications. By submitting this Request Form the Recipient is entering into a contract, the Terms and Conditions of which are attached hereto and made a part hereof, and acknowledges that the Recipient has read this document, that the Recipient understands it and agrees to be bound by its terms.

In consideration of Recipient's acceptance of the terms of this Request Form, the sufficiency of which is hereby acknowledged, *Wendel grants Recipient a limited, nonexclusive, non-transferable license, subject to the attached Terms and Conditions, to temporarily save the original electronic files to storage media for viewing and printing, and the creation of derivative works therefrom, by Recipient solely for the Purpose stated above, which Purpose must be related to the Project named above.*

Each person signing this Agreement represents and warrants that he or she is duly authorized and has legal capacity to execute and deliver this Agreement.

Wendel

Signature

Printed Name

Title

Date

Recipient

Signature

Printed Name

Title

Date

REQUEST FORM FOR ELECTRONIC FILES
Terms and Conditions

Recipient understands and confirms that (i) the electronic files provided by Wendel may contain confidential and/or proprietary information and are each and all deemed confidential and proprietary, (ii) Recipient shall use not less than the same degree of care to avoid disclosure of the electronic files as it uses for its own confidential or proprietary Information of like importance, and (iii) Recipient must immediately notify Wendel of any known or suspected unauthorized use(s) of the electronic files.

The availability of electronic files is subject to the consent of the owner(s) of those electronic files. Wendel will not negotiate with nor repeatedly solicit another party to obtain their consent. Neither this Request Form nor any such separate party's consent may be assigned or transferred by Recipient to any other person or entity.

Electronic files and data, and the license for the limited use thereof hereby granted, are provided by Wendel only for the convenience of the Recipient, do not constitute or imply a grant of any rights, by license or otherwise, to Recipient under any patent, copyright, trade secret, or other intellectual property right, are not Project contract documents nor Instruments of Service of any licensed professional, shall not be construed as containing original signatures and seals of any licensed professionals, and are not intended to be deemed a sale of the electronic files and data to the Recipient; all right, title and interest in the electronic files belong to and shall remain with Wendel. The electronic files and data shall not be used by the Recipient for the construction or building of the Project, for additions to the Project, for completion of the Project by others, or on other projects.

Recipient may not remove or obscure any copyright notice or other notices contained in the electronic files. Recipient will not copy, alter, modify, disassemble, reverse engineer, decompile, or distribute, sell, rent, lease, lend or sub-license to any third party, any of the electronic files received from Wendel without the prior written consent of Wendel.

Wendel, at its sole discretion, may (i) modify the electronic files before they are provided to the Recipient. Such modifications may include, but are not necessarily limited to, removal of the seals of licensed professionals and certain confidential or proprietary information or (ii) refuse to provide some or all electronic files requested by Recipient.

WENDEL PROVIDES THE ELECTRONIC FILES SOLELY ON AN "AS IS" BASIS. NO REPRESENTATION OR WARRANTY IS MADE, EITHER EXPRESS OR IMPLIED, CONCERNING THE MERCHANTABILITY OF THE ELECTRONIC FILES AND DATA OR THEIR FITNESS FOR A PARTICULAR PURPOSE. Wendel shall not be responsible for and the Recipient assumes all risks associated with the receipt, use and possession of the electronic files. Recipient waives any and all claims against and shall defend, indemnify and hold harmless Wendel, its sub-consultants, subcontractors, agents, and the owners, partners and employees of each of them, from and against any and all third party claims, suits, losses, direct, indirect, consequential, punitive or special damages, costs and expenses, including but not limited to attorney's fees, arising out of, resulting from, or in connection with the Recipient's possession, use, modification or distribution of the electronic files and data provided by Wendel. The waiver, defense and indemnification obligations set forth in this paragraph shall survive any use of the electronic files provided under this Request Form.

Recipient agrees it shall have no right to furnish or provide the electronic files in any litigation, administrative proceeding, arbitration or mediation against Wendel, its sub-consultants, subcontractors, agents, and the owners, partners and employees of each of them, except with the express written consent of Wendel.

Upon conclusion or expiration of the stated Purpose, Recipient will return or destroy all the electronic files received from Wendel. Recipient will retain no copies of the electronic files, unless both parties agree that such return or destruction is not feasible, Recipient will then extend the protection of the confidentiality requirements set forth herein to the electronic files not returned or destroyed, and refrain from further use or disclosure of such electronic files or their content for as long as Recipient retains the electronic files.

The Recipient understands and acknowledges that any disclosure or misappropriation of any of the electronic files, or the confidential or proprietary data or Information contained therein, in violation of this contract may cause Wendel irreparable harm, the amount of which may be difficult to ascertain, and therefore agrees that Wendel shall have the right to apply to a court of competent jurisdiction for an order restraining and enjoining such disclosure or breach and for such other relief as Wendel shall deem appropriate. Such right of Wendel is to be in addition to the remedies otherwise available to Wendel at law or in equity. The Recipient expressly waives (i) the defense that a remedy in damages will be adequate and (ii) any requirement in an action for injunction for the posting of a bond by Wendel. If any action at law or in equity is brought to enforce or interpret the provisions of this contract, the prevailing party in such action shall be awarded its attorneys' fees and costs incurred.

This Request Form shall be interpreted and construed in accordance with the laws of the State of New York. If one or more of the provisions contained herein is found to be invalid, illegal or unenforceable in any respect, the validity, legality and enforceability of the remaining provisions shall not be affected. Such invalid, illegal or unenforceable provisions shall be revised only to the extent necessary to make them enforceable. Recipient agrees to submit to jurisdiction and venue in the state and federal courts of Erie County, New York for any dispute which may arise hereunder.

This Request Form contains all applicable terms and conditions relating to the provision of the requested electronic files to the Recipient by Wendel. No other terms and conditions apply. This Request Form is not a part of, subject to, nor a modification of the terms and conditions of any bid documents or contract documents of the Project named above.

REQUEST FOR INFORMATION

Contractor Name

Address:
City, State, Zip:

Phone:
Fax:

Project No. 448715

Contractor RFI No.: _____ **DATE:** _____

TITLE: _____ **JOB:** _____

PROJECT: *Pioneer Valley Transit Authority*
UMass Lift Replacement

REQUIRED: _____

TO: Wendel
375 Essjay Road, Suite 200
Williamsville, New York, 14221

ATTN:

QUESTION:

ANSWER:

Note: the response to this RFI is for clarification of the contract documents. The response is **NOT** authorization to proceed with additional work.

Answered By:_____ Date:_____

THIS PAGE INTENTIONALLY LEFT BLANK

SECTION 013200 - CONSTRUCTION PROGRESS DOCUMENTATION

PART 1 - GENERAL

1.1 RELATED DOCUMENTS

A. Drawings and general provisions of the Contract, including General and Supplementary Conditions and other Division 01 Specification Sections, apply to this Section.

1.2 SUMMARY

A. Section includes administrative and procedural requirements for documenting the progress of construction during performance of the Work, including but not limited to, the following:

1. Preliminary construction schedule.
2. Contractor's construction schedule.
3. Submittal schedule.
4. Daily construction reports.
5. Material location reports.
6. Site condition reports.
7. Special reports.

1.3 DEFINITIONS

A. Activity: A discrete part of a project that can be identified for planning, scheduling, monitoring, and controlling the construction project. Activities included in a construction schedule consume time and resources.

1.4 INFORMATIONAL SUBMITTALS

A. Format for Submittals: Submit required submittals in the following format:

1. Working electronic copy of schedule file, where indicated.
2. PDF electronic file.

B. Preliminary construction schedule.

1. Approval of startup construction schedule will not constitute approval of schedule of values for cost-loaded activities.

C. Contractor's Construction Schedule: Submit on 11”x17” paper for review as required to display entire schedule for entire construction period.

1. Submit a working electronic copy of schedule, using software indicated, and labeled to comply with requirements for submittals. Include type of schedule (initial or updated) and date on label.

D. Daily Construction Reports: Submit at weekly intervals.

E. Site Condition Reports: Submit at time of discovery of differing conditions.

F. Special Reports: Submit at time of unusual event.

G. Two Week Look-Ahead Schedules: Submit at weekly intervals.

1.5 COORDINATION

A. Coordinate Contractor's construction schedule with the schedule of values, list of subcontracts, submittal schedule, progress reports, payment requests, and other required schedules and reports.

1. Secure time commitments for performing critical elements of the Work from entities involved.
2. Coordinate each construction activity in the network with other activities and schedule them in proper sequence.

PART 2 - PRODUCTS

2.1 CONTRACTOR'S CONSTRUCTION SCHEDULE, GENERAL

A. Time Frame: Extend schedule from date established for the Notice to Proceed to date of Final Completion.

1. Contract completion date(s) shall not be changed by submission of a schedule that shows a late completion date, unless specifically authorized by Change Order.

B. Activities: Treat each story or separate area as a separate numbered activity for each main element of the Work. Include the following:

1. Activity Duration
2. Procurement Activities
3. Submittal Review Time
4. Startup and Testing Time
5. Substantial Completion
6. Punch List and Final Completion

2.2 PRELIMINARY CONSTRUCTION SCHEDULE

A. Bar-Chart Schedule: Submit startup, horizontal, bar-chart-type construction schedule within 30 calendar days of date established for the Notice to Proceed.

B. Preparation: Indicate each significant construction activity separately.

2.3 CONTRACTOR'S CONSTRUCTION SCHEDULE (GANTT CHART)

A. Gantt-Chart Schedule: Submit a comprehensive, fully developed, horizontal, Gantt-chart-type, Contractor's construction schedule within 30 calendar days of date established for the Notice to Proceed. Base schedule on the startup construction schedule and additional information received since the start of Project.

B. Preparation: Indicate each significant construction activity separately.

2.4 REPORTS

A. Daily Construction Reports: Prepare a daily construction report recording the following information concerning events at Project site:

1. List of subcontractors at Project site.
2. Approximate count of personnel at Project site.
3. Equipment at Project site.
4. Material deliveries.
5. High and low temperatures and general weather conditions, including presence of rain or snow.
6. Accidents.
7. Meetings and significant decisions.
8. Unusual events (see special reports).
9. Stoppages, delays, shortages, and losses.
10. Emergency procedures.
11. Orders and requests of authorities having jurisdiction.
12. Change Orders received and implemented.
13. Services connected and disconnected.
14. Locations of Work.

B. Site Condition Reports: Immediately on discovery of a difference between site conditions and the Contract Documents, prepare and submit a detailed report. Submit with a Request for Information. Include a detailed description of the differing conditions, together with recommendations for changing the Contract Documents.

2.5 SPECIAL REPORTS

A. General: Submit special reports directly to Owner within one day of an occurrence. Distribute copies of report to parties affected by the occurrence.

B. Reporting Unusual Events: When an event of an unusual and significant nature occurs at Project site, whether or not related directly to the Work, prepare and submit a special report. List chain of events, persons participating, response by Contractor's personnel, evaluation of results or effects, and similar pertinent information. Advise Owner in advance when these events are known or predictable.

C. Two Week Look-Ahead Schedules: Contractor will submit a 2 week look-ahead schedule each week on a specific day of the week to be determined at the Preconstruction meeting. Each schedule will show specific work activities over that 2 week period and also areas of coordination required with other contractors and involved entities. These schedules will also show delivery dates of critical material or equipment items.

PART 3 - EXECUTION

3.1 CONTRACTOR'S CONSTRUCTION SCHEDULE

A. Contractor's Construction Schedule Updating: At monthly intervals, update schedule to reflect actual construction progress and activities. Issue schedule one week before each regularly scheduled progress meeting.

1. Revise schedule immediately after each meeting or other activity where revisions have been recognized or made. Issue updated schedule concurrently with the report of each such meeting.
2. Include a report with updated schedule that indicates every change, including, but not limited to, changes in logic, durations, actual starts and finishes, and activity durations.
3. As the Work progresses, indicate final completion percentage for each activity.

B. Distribution: Distribute copies of approved schedule to Architect, Owner, separate contractors, testing and inspecting agencies, and other parties identified by Owner with a need-to-know schedule responsibility.

END OF SECTION 013200

SECTION 013233 - PHOTOGRAPHIC DOCUMENTATION

PART 1 GENERAL

1.1 RELATED DOCUMENTS

A. Drawings and general provisions of the Contract, including General and Supplementary Conditions and other Division 01 Specification Sections, apply to this Section.

1.2 SUMMARY

A. Section includes administrative and procedural requirements for the following:
   1. Preconstruction photographs.
   2. Periodic construction photographs.
   3. Final completion construction photographs.

1.3 INFORMATIONAL SUBMITTALS

A. Digital Photographs: Submit image files within three business days of taking photographs.
   1. Digital Camera: Minimum sensor resolution of 8 megapixels.
   2. Format: Minimum 3200 by 2400 pixels, in unaltered original files, with same aspect ratio as the sensor, uncropped, date and time stamped, in folder named by date of photograph.

PART 2 PRODUCTS

2.1 PHOTOGRAPHIC MEDIA

A. Digital Images: Provide images in JPG format, produced by a digital camera with minimum sensor size of 8 megapixels, and at an image resolution of not less than 3200 by 2400 pixels.

PART 3 EXECUTION

3.1 CONSTRUCTION PHOTOGRAPHS

A. General: Take photographs using the maximum range of depth of field, and that are in focus, to clearly show the Work. Photographs with blurry or out-of-focus areas will not be accepted.

B. Digital Images: Submit digital images exactly as originally recorded in the digital camera, without alteration, manipulation, editing, or modifications using image-editing software.
   1. Date and Time: Include date and time in file name for each image.

C. Preconstruction Photographs: Before starting construction, take photographs of Project site and surrounding properties, including existing items to remain during construction, from different vantage points, as directed by Construction Manager .

1. Flag excavation areas and construction limits before taking construction photographs.
2. Take minimum 40 photographs to show existing conditions before starting the Work.
3. Take additional photographs as required to record settlement or cracking of adjacent structures, pavements, and improvements.

D. Periodic Construction Photographs: Take minimum 40 photographs weekly, as required to document construction progress, with timing each month adjusted to coincide with the cutoff date associated with each Application for Payment. Select vantage points to show status of construction and progress since last photographs were taken.

E. Final Completion Construction Photographs: Take 40 photographs after date of Substantial Completion for submission as project record documents.

F. Additional Photographs: Architect may request photographs in addition to periodic photographs specified.
1. Three days' notice will be given, where feasible.
2. In emergency situations, take additional photographs within 24 hours of request.
3. Circumstances that could require additional photographs include, but are not limited to, the following:
    a. Immediate follow-up when on-site events result in construction damage or losses.
    b. Photographs to clarify Contractor's "Request for Information."
    c. Photographs to be taken at fabrication locations away from Project site.
    d. Substantial Completion of a major phase or component of the Work.

END OF SECTION 013233

SECTION 013300 - SUBMITTAL PROCEDURES

PART 1 - GENERAL

1.1 RELATED DOCUMENTS

A. Drawings and general provisions of the Contract including General and Supplementary Conditions and other Division 01 Specification Sections apply to this Section.

1.2 SUMMARY

A. Section includes requirements for the submittal schedule and administrative and procedural requirements for submitting Shop Drawings, Product Data, Samples and other submittals.

B. Related Requirements:

1. Section 013000 “Construction Progress Documentation” for submitting schedules and reports, including Contractors construction schedules.

1.3 DEFINITIONS

A. Action Submittals: Written and graphic information, and physical samples that require Architect’s responsive action. Action submittals are those submittals indicated in individual Specification Sections as "action submittals."

B. Informational Submittals: Written and graphic information, and physical samples that do not require Architect’s responsive action. Submittals may be rejected for not complying with requirements. Informational submittals are those submittals indicated in individual Specification Sections as "informational submittals."

C. File Transfer Protocol (FTP): Communications protocol that enables transfer of files to and from another computer over a network and that serves as the basis for standard Internet protocols. An FTP site is a portion of a network located outside of network firewalls within which internal and external users are able to access files.

D. Portable Document Format (PDF): An open standard for electronic documents, licensed by Adobe Systems, used for representing documents in a device-independent and display resolution-independent fixed-layout document format.

E. Cloud-Based Construction Management Software Application (CMSA): Any of a number of proprietary file management collaborative systems intended for internet-connected device use. The intent of these applications is to enable dispersed users access to shared documents for storage, organization, retrieval, editing, tracking, reporting or other functions, with such access usually controlled by invitation and security protocols. More than one such application type or specific programs may be used, depending on Owner preferences.

1. Project preferred CMSA: Procore.

1.4 SUBMITTAL PROCEDURES

A. Architect's Digital Data Files: Electronic digital data files of the Contract Drawings will be provided by Architect for Contractor's use in preparing submittals.

1. Architect will furnish Contractor one set of digital data drawing files of the Contract Drawings for use in preparing Shop Drawings and Project Record Drawings.

a. Architect makes no representations as to the accuracy or completeness of digital data drawing files as they relate to the Contract Drawings.
b. Digital Drawing Software Program: The Contract Drawings are available in an AutoCAD format. Contact Architect to determine exact format available for each discipline.
c. Contractor shall execute a data licensing agreement in the form included in Project Manual.

1) To request electronic files, complete “Request Form for Electronic Files”.
2) Include “Processing Fee” in amount as indicated in section 013100 “Project Management and Coordination”.

B. Coordination: Coordinate preparation and processing of submittals with performance of construction activities.

1. Coordinate each submittal with fabrication, purchasing, testing, delivery, other submittals, and related activities that require sequential activity.
2. Identify long lead time submittals and products early on and notify Owner and Architect. Plan this into the submittal and delivery process.
3. Submit all submittal items required for each Specification Section concurrently unless partial submittals for portions of the Work are indicated on approved submittal schedule.
4. Submit action submittals and informational submittals required by the same Specification Section as separate packages under separate transmittals.
5. Coordinate transmittal of different types of submittals for related parts of the Work so processing will not be delayed because of need to review submittals concurrently for coordination.

a. Architect reserve(s) the right to withhold action on a submittal requiring coordination with other submittals until related submittals are received.

C. Processing Time: Allow time for submittal review, including time for resubmittals, as follows. Time for review shall commence upon Architect's receipt of submittal. No extension of the Contract Time will be authorized because of failure to transmit submittals enough in advance of the Work to permit processing, including resubmittals.

1. Initial Review: Allow 15 business days for initial review of each submittal. Allow additional time if coordination with subsequent submittals is required. Architect will advise Contractor when a submittal being processed must be delayed for coordination.

2. Intermediate Review: If intermediate submittal is necessary, process it in same manner as initial submittal.
3. Resubmittal Review: Allow 15 business days for review of each resubmittal.
4. Sequential Review: Where sequential review of submittals by Architect's consultants, Owner, or other parties is indicated, allow 20 additional business days for initial review of each submittal.
5. Concurrent Consultant Review: Where the Contract Documents indicate that submittals may be transmitted simultaneously to Architect and to Architect's consultants, allow 15 business days for review of each submittal. Submittal will be returned to Architect before being returned to Contractor.
6. Transmittal for Sample Submittals: Assemble each submittal individually and appropriately for transmittal and handling. Transmit each submittal using a transmittal form. Architect will return without review submittals received from sources other than Contractor. Transmit each submittal using the transmittal form at the end of this section.

D. Electronic Submittals: Identify and incorporate information in each electronic submittal file as follows:

1. Assemble complete submittal package into a single indexed file incorporating submittal requirements of a single Specification Section and transmittal form with links enabling navigation to each item.
2. Name file with submittal number or other unique identifier, including revision identifier.

    a. File name shall use project identifier and Specification Section number followed by a decimal point and then a sequential number (e.g., LNHS-061000.01). Resubmittals shall include an alphabetic suffix after another decimal point (e.g., LNHS-061000.01.A).

3. Provide means for insertion to permanently record Contractor's review and approval markings and action taken by Architect.
4. Transmittal Form for Electronic Submittals: Use software-generated form from electronic project management software acceptable to Owner and Architect, containing the following information:

    a. Project name.
    b. Date.
    c. Name and address of Architect.
    d. Name of Contractor.
    e. Name of firm or entity that prepared submittal.
    f. Names of subcontractor, manufacturer, and supplier.
    g. Category and type of submittal.
    h. Submittal purpose and description.
    i. Specification Section number and title.
    j. Specification paragraph number or drawing designation and generic name for each of multiple items.
    k. Drawing number and detail references, as appropriate.
    l. Location(s) where product is to be installed, as appropriate.
    m. Related physical samples submitted directly.
    n. Indication of full or partial submittal.
    o. Transmittal number, numbered consecutively.

p. Submittal and transmittal distribution record.
q. Other necessary identification.
r. Remarks.

5. Metadata: Include the following information as keywords in the electronic submittal file metadata:

a. Project name.
b. Number and title of appropriate Specification Section.
c. Manufacturer name.
d. Product name.

E. Options: Identify options requiring selection by Architect.

F. Deviations and Additional Information: On an attached separate sheet, prepared on Contractor's letterhead, record relevant information, requests for data, revisions other than those requested by Architect on previous submittals, and deviations from requirements in the Contract Documents, including minor variations and limitations. Include same identification information as related submittal.

G. Resubmittals: Make resubmittals in same form and number of copies as initial submittal.

1. Note date and content of previous submittal.
2. Note date and content of revision in label or title block and clearly indicate extent of revision.
3. Resubmit submittals until they are marked with approval notation from Architect's action stamp[s].

H. Distribution: Furnish copies of final submittals to manufacturers, subcontractors, suppliers, fabricators, and installers, authorities having jurisdiction, and others as necessary for performance of construction activities. Show distribution on transmittal forms.

I. Use for Construction: Retain complete copies of submittals on Project site. Use only final action submittals that are marked with approval notation from Architect's action stamp[s].

PART 2 - PRODUCTS

2.1 ACTION SUBMITTALS

A. General: Prepare and submit Action Submittals required by individual Specification Sections.

B. Product Data: Collect information into a single submittal for each element of construction and type of product or equipment.

1. If information must be specially prepared for submittal because standard printed data are not suitable for use, submit as Shop Drawings, not as Product Data.
2. Mark each copy of each submittal to show which products and options are applicable.
3. Include the following information, as applicable:

a. Manufacturer's written recommendations.
b. Manufacturer's product specifications.
c. Color charts showing full range of available colors.
d. Manufacturer catalog cuts.
e. Wiring diagrams showing factory-installed wiring.
f. Printed performance curves.
g. Operational range diagrams.
h. Mill reports.
i. Standard product operating and maintenance manuals.
j. Compliance with recognized trade association standards.
k. Compliance with recognized testing agency standards.
l. Application of testing agency labels and seals.
m. Notation of coordination requirements.

4. For equipment, include the following in addition to the above, as applicable:

a. Wiring diagrams showing factory-installed wiring.
b. Printed performance curves.
c. Operational range diagrams.
d. Clearances required to other construction, if not indicated on accompanying Shop Drawings.

C. Shop Drawings: Prepare Project-specific information, drawn accurately to scale. Do not base Shop Drawings on reproductions of the Contract Documents or standard printed data.

1. Preparation: Include the following information, as applicable:

a. Dimensions.
b. Identification of products.
c. Fabrication and installation drawings.
d. Roughing-in and setting diagrams.
e. Wiring diagrams showing field-installed wiring, including power, signal, and control wiring.
f. Shop work manufacturing instructions.
g. Templates and patterns.
h. Schedules.
i. Design calculations.
j. Compliance with specified standards.
k. Notation of coordination requirements.
l. Notation of dimensions established by field measurement.

2. Wiring Diagrams: Differentiate between manufacturer-installed and field-installed wiring.
3. Sheet Size: Except for templates, patterns, and similar full-size drawings, submit Shop Drawings on sheets at least 8-1/2 by 11 inches but no larger than sheet size used for Contract Document Drawings.
4. Number of Copies: Submit one electronic file copy of each submittal. Architect will return the one electronic copy marked with action taken to the Contractor for distribution. Contractor shall make necessary copies from the returned copy.

D. Submittals requiring compliance with other sections in the Project Manual.

1. Contractor's Construction Schedule.
2. Submittals Schedule.
3. Application for Payment.
4. Schedule of Values.
5. Subcontract List.

2.2 INFORMATIONAL SUBMITTALS

A. General: Prepare and submit Informational Submittals required by individual Specification Sections and elsewhere in the Contract Documents.

1. Number of Copies: Submit two copies of each submittal, unless otherwise indicated. Architect will not return copies, unless they are rejected for noncompliance with the Contract Documents.
2. Certificates and Certifications: Provide a notarized statement that includes signature of entity responsible for preparing certification. Certificates and certifications shall be signed by an officer or other individual authorized to sign documents on behalf of that entity.
3. Test and Inspection Reports: Comply with requirements in Division 1 Section "Quality Requirements."

B. Qualification Data: Prepare written information that demonstrates capabilities and experience of firm or person. Include lists of completed projects with project names and addresses, names and addresses of architects and owners, and other information specified.

C. Product Certificates: Prepare written statements on manufacturer's letterhead certifying that product complies with requirements.

D. Welding Certificates: Prepare written certification that welding procedures and personnel comply with requirements. Submit record of Welding Procedure Specification (WPS) and Procedure Qualification Record (PQR) on AWS forms. Include names of firms and personnel certified.

E. Installer Certificates: Prepare written statements on manufacturer's letterhead certifying that Installer complies with requirements and, where required, is authorized for this specific Project.

F. Manufacturer Certificates: Prepare written statements on manufacturer's letterhead certifying that manufacturer complies with requirements. Include evidence of manufacturing experience where required.

G. Material Certificates: Prepare written statements on manufacturer's letterhead certifying that material complies with requirements.

H. Material Test Reports: Prepare reports written by a qualified testing agency, on testing agency's standard form, indicating and interpreting test results of material for compliance with requirements.

I. Preconstruction Test Reports: Prepare reports written by a qualified testing agency, on testing agency's standard form, indicating and interpreting results of tests performed before installation of product, for compliance with performance requirements.

J. Compatibility Test Reports: Prepare reports written by a qualified testing agency, on testing agency's standard form, indicating and interpreting results of compatibility tests performed before installation of product. Include written recommendations for primers and substrate preparation needed for adhesion.

K. Field Test Reports: Prepare reports written by a qualified testing agency, on testing agency's standard form, indicating and interpreting results of field tests performed either during installation of product or after product is installed in its final location, for compliance with requirements.

L. Product Test Reports: Prepare written reports indicating current product produced by manufacturer complies with requirements. Base reports on evaluation of tests performed by manufacturer and witnessed by a qualified testing agency, or on comprehensive tests performed by a qualified testing agency.

M. Research/Evaluation Reports: Prepare written evidence, from a model code organization acceptable to authorities having jurisdiction, that product complies with building code in effect for Project. Include the following information:

1. Name of evaluation organization.
2. Date of evaluation.
3. Time period when report is in effect.
4. Product and manufacturers' names.
5. Description of product.
6. Test procedures and results.
7. Limitations of use.

N. Maintenance Data: Prepare written and graphic instructions and procedures for operation and normal maintenance of products and equipment.

O. Design Data: Prepare written and graphic information, including, but not limited to, performance and design criteria, list of applicable codes and regulations, and calculations. Include list of assumptions and other performance and design criteria and a summary of loads. Include load diagrams if applicable. Provide name and version of software, if any, used for calculations. Include page numbers.

P. Manufacturer's Instructions: Prepare written or published information that documents manufacturer's recommendations, guidelines, and procedures for installing or operating a product or equipment. Include name of product and name, address, and telephone number of manufacturer. Include the following, as applicable:

1. Preparation of substrates.
2. Required substrate tolerances.
3. Sequence of installation or erection.
4. Required installation tolerances.
5. Required adjustments.
6. Recommendations for cleaning and protection.

Q. Manufacturers Field Reports: Prepare written information documenting factory-authorized service representative's tests and inspections. Include the following, as applicable:

1. Name, address, and telephone number of factory-authorized service representative making report.
2. Statement on condition of substrates and their acceptability for installation of product.
3. Statement that products at Project site comply with requirements.
4. Summary of installation procedures being followed, whether they comply with requirements and, if not, what corrective action was taken.
5. Results of operational and other tests and a statement of whether observed performance complies with requirements.
6. Statement whether conditions, products, and installation will affect warranty.
7. Other required items indicated in individual Specification Sections.

R. Insurance Certificates and Bonds: Prepare written information indicating current status of insurance or bonding coverage. Include name of entity covered by insurance or bond, limits of coverage, amounts of deductibles, if any, and term of the coverage.

S. Material Safety Data Sheets: Keep on site and submit information directly to Owner. If submitted to Architect, Architect will not review this information but will return it with no action taken.

PART 3 - EXECUTION

3.1 CONTRACTOR'S REVIEW

A. Action and Informational Submittals: Review each submittal and check for coordination with other Work of the Contract and for compliance with the Contract Documents. Note corrections and field dimensions. Mark with approval stamp before submitting to Architect.

B. Project Closeout and Maintenance Material Submittals: See requirements in Section 017700 "Closeout Procedures."

C. Approval Stamp: Stamp each submittal with a uniform, approval stamp. Include Project name and location, submittal number, Specification Section title and number, name of reviewer, date of Contractor's approval, and statement certifying that submittal has been reviewed, checked, and approved for compliance with the Contract Documents.

3.2 ARCHITECT'S ACTION

A. General: Architect will not review submittals that do not bear Contractor's approval stamp and will return them without action.

B. Action Submittals: Architect will review each submittal, make marks to indicate corrections or modifications required, and return it. Architect will stamp each submittal with an action stamp and will mark stamp appropriately to indicate action taken, as follows:

1. Architect’s Action:

a. Final Unrestricted Release: When the Architect marks a submittal "No Exceptions Taken" the Work covered by the submittal may proceed provided it complies with requirements of the Contract Documents. Final payment depends on that compliance.
b. Final-But-Restricted Release: When the Architect marks a submittal "Provide as Corrected," the Work covered by the submittal may proceed provided it complies with notations or corrections on the submittal and requirements of the Contract Documents. Final payment depends on that compliance.
c. Returned for Resubmittal: When the Architect marks a submittal "Revise and Resubmit," do not proceed with Work covered by the submittal, including purchasing, fabrication, delivery, or other activity. Revise or prepare a new submittal according to the notations; resubmit without delay.

    1) Do not use, or allow others to use, submittals marked "Revise and Resubmit" at the Project Site or elsewhere where Work is in progress.

d. Returned for Resubmittal: When the Architect marks a submittal "Rejected", the Architect has not completed a full review, because it is clear that the submittal does not reflect the requirements of the Contract Documents. Do not proceed with work covered by the submittal, including purchasing, fabrication, delivery or other activity. Revise or prepare a new submittal that complies with the Contract Documents.
e. Other Action: If the submittal is primarily for information purposes, record purposes, special processing, or other contractor activity, the submittal will be returned marked "Reviewed for General Conformance Only". These submittals have been received and processed for information only and not approved or disapproved by the architect.

C. Informational Submittals: Architect will review each submittal and will not return it, or will reject and return it if it does not comply with Contract Document requirements.

D. Submittals not required by the Contract Documents will not be reviewed and will be discarded or returned without action.

END OF SECTION 013300

wendel

Submittal No. _____

Submittal Transmittal

PROJECT: PVTA UMass Lift Replacement WD PROJECT #: **448715**

OWNER: Pioneer Valley Transit Authority (PVTA) A/E: Wendel WD Architecture, Engineering, Land Surveying & Landscape Architecture, P.C.

CONTRACT # & NAME _____

CONTRACTOR: _____
(NAME, ADDRESS, TELEPHONE & FAX NUMBERS)

☐ NEW SUBMITTAL ☐ RESUBMITTAL Date: _____

This submittal is: ☐ AS SPECIFIED REMARKS: _____

NUMBER OF COPIES SUBMITTED: (8 maximum) _____

TYPE OF SUBMITTAL: ***(CHECK ALL THAT APPLY)***

( ) SHOP DRAWINGS
( ) SAMPLE
( ) COLOR SELECTION
( ) SCHEDULE
( ) WARRANTY
( ) TEST REPORT
( ) PRODUCT DATA/CATALOG CUT
( ) RECORD DOCUMENT
( ) PERFORMANCE DATA
( ) OPERATIONS & MAINTENANCE DATA
( ) OTHER _____

SPEC. SECTION: _____

PARAGRAPH(S): _____

DWG. REF. NO.: _____

CONTRACTOR CERTIFICATION

CONTRACTOR CERTIFIES THAT THE INFORMATION SUBMITTED COMPLIES WITH THE CONTRACT DOCUMENT REQUIREMENTS.

By: _____

Date: _____

NOTE: Contractor shall apply an approval stamp to each copy of each submittal.

DESCRIPTION OF SUBMITTAL: _____

PRODUCT NAME: _____

MANUFACTURER: _____

ADDRESS: _____ TEL. NO.: _____

CONTRACTOR or SUBCONTRACTOR: _____ TEL. NO.: _____

SUPPLIER: _____ TEL. NO.: _____

Submittal No._____

Submittal Transmittal

Certificate of Compliance with Buy America Requirements

The bidder or offeror hereby certifies that it will comply with the FTA Buy America requirements of 49 U.S.C. 5323(j)(1), and the applicable regulations in 49 CFR part 661.

Date_____

Signature_____

Company_____

Name_____

Title_____

Certificate of Non-Compliance with Buy America Requirements

The bidder or offeror hereby certifies that it cannot comply with the requirements of 49 U.S.C. 5323(j), but it may qualify for an exception to the requirement pursuant to 49 U.S.C. 5323(j)(2), as amended, and the applicable regulations in 49 C.F.R. 661.7.

Date_____

Signature_____

Company_____

Name_____

Title_____

SECTION 014000 - QUALITY REQUIREMENTS

PART 1 GENERAL

1.1 RELATED DOCUMENTS

A. Drawings and general provisions of the Contract, including General and Supplementary Conditions and other Division 01 Specification Sections, apply to this Section.

1.2 SUMMARY

A. Section includes administrative and procedural requirements for quality assurance and quality control.

B. Testing and inspecting services are required to verify compliance with requirements specified or indicated. These services do not relieve Contractor of responsibility for compliance with the Contract Document requirements.
   1. Specific quality-assurance and -control requirements for individual construction activities are specified in the Sections that specify those activities. Requirements in those Sections may also cover production of standard products.
   2. Specified tests, inspections, and related actions do not limit Contractor's other quality-assurance and -control procedures that facilitate compliance with the Contract Document requirements.
   3. Requirements for Contractor to provide quality-assurance and -control services required by Architect, Owner, Commissioning Authority, if applicable, and Construction Manager or authorities having jurisdiction are not limited by provisions of this Section.
   4. Specific test and inspection requirements are not specified in this Section.

1.3 DEFINITIONS

A. Quality-Assurance Services: Activities, actions, and procedures performed before and during execution of the Work to guard against defects and deficiencies and substantiate that proposed construction will comply with requirements.

B. Quality-Control Services: Tests, inspections, procedures, and related actions during and after execution of the Work to evaluate that actual products incorporated into the Work and completed construction comply with requirements. Services do not include contract enforcement activities performed by Construction Manager.

C. Preconstruction Testing: Tests and inspections performed specifically for Project before products and materials are incorporated into the Work, to verify performance or compliance with specified criteria.

D. Product Testing: Tests and inspections that are performed by an NRTL, an NVLAP, or a testing agency qualified to conduct product testing and acceptable to authorities having jurisdiction, to establish product performance and compliance with specified requirements.

E. Source Quality-Control Testing: Tests and inspections that are performed at the source, e.g., plant, mill, factory, or shop.

F. Field Quality-Control Testing: Tests and inspections that are performed on-site for installation of the Work and for completed Work.

G. Testing Agency: An entity engaged to perform specific tests, inspections, or both. Testing laboratory shall mean the same as testing agency.

H. Installer/Applicator/Erector: Contractor or another entity engaged by Contractor as an employee, Subcontractor, or Sub-subcontractor, to perform a particular construction operation, including installation, erection, application, and similar operations.
   1. Use of trade-specific terminology in referring to a trade or entity does not require that certain construction activities be performed by accredited or unionized individuals, or that requirements specified apply exclusively to specific trade(s).

I. Experienced: Unless otherwise indicated in individual Specification sections, when used with an entity or individual, "experienced" means having successfully completed a minimum of five previous projects similar in nature, size, and extent to this Project; being familiar with special requirements indicated; and having complied with requirements of authorities having jurisdiction.

1.4 CONFLICTING REQUIREMENTS

A. Referenced Standards: If compliance with two or more standards is specified and the standards establish different or conflicting requirements for minimum quantities or quality levels, comply with the most stringent requirement. Refer conflicting requirements that are different, but apparently equal, to Architect for a decision before proceeding.

B. Minimum Quantity or Quality Levels: The quantity or quality level shown or specified shall be the minimum provided or performed. The actual installation may comply exactly with the minimum quantity or quality specified, or it may exceed the minimum within reasonable limits. To comply with these requirements, indicated numeric values are minimum or maximum, as appropriate, for the context of requirements. Refer uncertainties to Architect for a decision before proceeding.

1.5 INFORMATIONAL SUBMITTALS

A. Contractor's Quality-Control Plan: For quality-assurance and quality-control activities and responsibilities.

B. Qualification Data: For Contractor's quality-control personnel.

C. Testing Agency Qualifications: For testing agencies specified in "Quality Assurance" Article to demonstrate their capabilities and experience. Include proof of qualifications in the form of a recent report on the inspection of the testing agency by a recognized authority.

D. Schedule of Tests and Inspections: Prepare in tabular form and include the following:
   1. Specification Section number and title.
   2. Entity responsible for performing tests and inspections.
   3. Description of test and inspection.

4. Identification of applicable standards.
5. Identification of test and inspection methods.
6. Number of tests and inspections required.
7. Time schedule or time span for tests and inspections.
8. Requirements for obtaining samples.
9. Unique characteristics of each quality-control service.

1.6 CONTRACTOR'S QUALITY-CONTROL PLAN

A. Quality-Control Plan, General: Submit quality-control plan within 14 calendar days of Notice to Proceed, and not less than seven calendar days prior to preconstruction conference. Submit in format acceptable to Architect. Identify personnel, procedures, controls, instructions, tests, records, and forms to be used to carry out Contractor's quality-assurance and quality-control responsibilities. Coordinate with Contractor's construction schedule.

B. Quality-Control Personnel Qualifications: Engage qualified full-time personnel trained and experienced in managing and executing quality-assurance and quality-control procedures similar in nature and extent to those required for Project.
   1. Project quality-control manager may also serve as Project superintendent.

C. Submittal Procedure: Describe procedures for ensuring compliance with requirements through review and management of submittal process. Indicate qualifications of personnel responsible for submittal review.

D. Testing and Inspection: In quality-control plan, include a comprehensive schedule of Work requiring testing or inspection, including the following:
   1. Contractor-performed tests and inspections including subcontractor-performed tests and inspections. Include required tests and inspections and Contractor-elected tests and inspections.

E. Monitoring and Documentation: Maintain testing and inspection reports including log of approved and rejected results. Include work Architect has indicated as nonconforming or defective. Indicate corrective actions taken to bring nonconforming work into compliance with requirements. Comply with requirements of authorities having jurisdiction.

1.7 REPORTS AND DOCUMENTS

A. Test and Inspection Reports: Prepare and submit certified written reports specified in other Sections. Include the following:
   1. Date of issue.
   2. Project title and number.
   3. Name, address, and telephone number of testing agency.
   4. Dates and locations of samples and tests or inspections.
   5. Names of individuals making tests and inspections.
   6. Description of the Work and test and inspection method.
   7. Identification of product and Specification Section.
   8. Complete test or inspection data.
   9. Test and inspection results and an interpretation of test results.

10. Record of temperature and weather conditions at time of sample taking and testing and inspecting.
11. Comments or professional opinion on whether tested or inspected Work complies with the Contract Document requirements.
12. Name and signature of laboratory inspector.
13. Recommendations on retesting and reinspecting.

B. Manufacturer's Technical Representative's Field Reports: Prepare written information documenting manufacturer's technical representative's tests and inspections specified in other Sections. Include the following:
1. Name, address, and telephone number of technical representative making report.
2. Statement on condition of substrates and their acceptability for installation of product.
3. Statement that products at Project site comply with requirements.
4. Summary of installation procedures being followed, whether they comply with requirements and, if not, what corrective action was taken.
5. Results of operational and other tests and a statement of whether observed performance complies with requirements.
6. Statement whether conditions, products, and installation will affect warranty.
7. Other required items indicated in individual Specification Sections.

C. Factory-Authorized Service Representative's Reports: Prepare written information documenting manufacturer's factory-authorized service representative's tests and inspections specified in other Sections. Include the following:
1. Name, address, and telephone number of factory-authorized service representative making report.
2. Statement that equipment complies with requirements.
3. Results of operational and other tests and a statement of whether observed performance complies with requirements.
4. Statement whether conditions, products, and installation will affect warranty.
5. Other required items indicated in individual Specification Sections.

D. Permits, Licenses, and Certificates: For Owner's records, submit copies of permits, licenses, certifications, inspection reports, releases, jurisdictional settlements, notices, receipts for fee payments, judgments, correspondence, records, and similar documents, established for compliance with standards and regulations bearing on performance of the Work.

1.8 QUALITY ASSURANCE

A. General: Qualifications paragraphs in this article establish the minimum qualification levels required; individual Specification Sections specify additional requirements.

B. Manufacturer Qualifications: A firm experienced in manufacturing products or systems similar to those indicated for this Project and with a record of successful in-service performance, as well as sufficient production capacity to produce required units.

C. Fabricator Qualifications: A firm experienced in producing products similar to those indicated for this Project and with a record of successful in-service performance, as well as sufficient production capacity to produce required units.

D. Installer Qualifications: A firm or individual experienced in installing, erecting, or assembling work similar in material, design, and extent to that indicated for this Project, whose work has resulted in construction with a record of successful in-service performance.

E. Professional Engineer Qualifications: A professional engineer who is legally qualified to practice in jurisdiction where Project is located and who is experienced in providing engineering services of the kind indicated. Engineering services are defined as those performed for installations of the system, assembly, or product that are similar in material, design, and extent to those indicated for this Project.

F. Specialists: Certain Specification Sections require that specific construction activities shall be performed by entities who are recognized experts in those operations. Specialists shall satisfy qualification requirements indicated and shall be engaged for the activities indicated.
   1. Requirements of authorities having jurisdiction shall supersede requirements for specialists.

G. Testing Agency Qualifications: An NRTL, an NVLAP, or an independent agency with the experience and capability to conduct testing and inspecting indicated, as documented according to ASTM E 329; and with additional qualifications specified in individual Sections; and, where required by authorities having jurisdiction, that is acceptable to authorities.
   1. NRTL: A nationally recognized testing laboratory according to 29 CFR 1910.7.
   2. NVLAP: A testing agency accredited according to NIST's National Voluntary Laboratory Accreditation Program.

H. Manufacturer's Technical Representative Qualifications: An authorized representative of manufacturer who is trained and approved by manufacturer to observe and inspect installation of manufacturer's products that are similar in material, design, and extent to those indicated for this Project.

I. Factory-Authorized Service Representative Qualifications: An authorized representative of manufacturer who is trained and approved by manufacturer to inspect installation of manufacturer's products that are similar in material, design, and extent to those indicated for this Project.

J. Preconstruction Testing: Where testing agency is indicated to perform preconstruction testing for compliance with specified requirements for performance and test methods, comply with the following:
   1. Contractor responsibilities include the following:
      a. Provide test specimens representative of proposed products and construction.
      b. Submit specimens in a timely manner with sufficient time for testing and analyzing results to prevent delaying the Work.
      c. Provide sizes and configurations of test assemblies, mockups, and laboratory mockups to adequately demonstrate capability of products to comply with performance requirements.
   2. Testing Agency Responsibilities: Submit a certified written report of each test, inspection, and similar quality-assurance service to Architect and Commissioning Authority, if applicable[, through Construction Manager], with copy to Contractor. Interpret tests and inspections and state in each report whether tested and inspected work complies with or deviates from the Contract Documents.

1.9 QUALITY CONTROL

A. Owner Responsibilities: Where quality-control services are indicated as Owner's responsibility, Owner will engage a qualified testing agency to perform these services.
   1. Owner will furnish Contractor with names, addresses, and telephone numbers of testing agencies engaged and a description of types of testing and inspecting they are engaged to perform.
   2. Payment for these services will be made from testing and inspecting allowances, as authorized by Change Orders.
   3. Costs for retesting and reinspecting construction that replaces or is necessitated by work that failed to comply with the Contract Documents will be charged to Contractor, and the Contract Sum will be adjusted by Change Order.

B. Contractor Responsibilities: Tests and inspections not explicitly assigned to Owner are Contractor's responsibility. Perform additional quality-control activities required to verify that the Work complies with requirements, whether specified or not.
   1. Unless otherwise indicated, provide quality-control services specified and those required by authorities having jurisdiction. Perform quality-control services required of Contractor by authorities having jurisdiction, whether specified or not.
   2. Where services are indicated as Contractor's responsibility, engage a qualified testing agency to perform these quality-control services.
      a. Contractor shall not employ same entity engaged by Owner, unless agreed to in writing by Owner.
   3. Notify testing agencies at least 24 hours in advance of time when Work that requires testing or inspecting will be performed.
   4. Where quality-control services are indicated as Contractor's responsibility, submit a certified written report, in duplicate, of each quality-control service.
   5. Testing and inspecting requested by Contractor and not required by the Contract Documents are Contractor's responsibility.
   6. Submit additional copies of each written report directly to authorities having jurisdiction, when they so direct.

C. Manufacturer's Field Services: Where indicated, engage a factory-authorized service representative to inspect field-assembled components and equipment installation, including service connections.

D. Manufacturer's Technical Services: Where indicated, engage a manufacturer's technical representative to observe and inspect the Work. Manufacturer's technical representative's services include participation in preinstallation conferences, examination of substrates and conditions, verification of materials, observation of Installer activities, inspection of completed portions of the Work, and submittal of written reports.

E. Retesting/Reinspecting: Regardless of whether original tests or inspections were Contractor's responsibility, provide quality-control services, including retesting and reinspecting, for construction that replaced Work that failed to comply with the Contract Documents.

F. Testing Agency Responsibilities: Cooperate with Architect, Construction Manager, and Commissioning Authority, if applicable and Contractor in performance of duties. Provide qualified personnel to perform required tests and inspections.

1. Notify Architect, Construction Manager, and Commissioning Authority, if applicable and Contractor promptly of irregularities or deficiencies observed in the Work during performance of its services.
2. Determine the location from which test samples will be taken and in which in-situ tests are conducted.
3. Conduct and interpret tests and inspections and state in each report whether tested and inspected work complies with or deviates from requirements.
4. Submit a certified written report, in duplicate, of each test, inspection, and similar quality-control service through Contractor.
5. Do not release, revoke, alter, or increase the Contract Document requirements or approve or accept any portion of the Work.
6. Do not perform any duties of Contractor.

G. Associated Services: Cooperate with agencies performing required tests, inspections, and similar quality-control services, and provide reasonable auxiliary services as requested. Notify agency sufficiently in advance of operations to permit assignment of personnel. Provide the following:
1. Access to the Work.
2. Incidental labor and facilities necessary to facilitate tests and inspections.
3. Adequate quantities of representative samples of materials that require testing and inspecting. Assist agency in obtaining samples.
4. Facilities for storage and field curing of test samples.
5. Delivery of samples to testing agencies.
6. Preliminary design mix proposed for use for material mixes that require control by testing agency.
7. Security and protection for samples and for testing and inspecting equipment at Project site.

H. Coordination: Coordinate sequence of activities to accommodate required quality-assurance and -control services with a minimum of delay and to avoid necessity of removing and replacing construction to accommodate testing and inspecting.
1. Schedule times for tests, inspections, obtaining samples, and similar activities.

I. Schedule of Tests and Inspections: Prepare a schedule of tests, inspections, and similar quality-control services required by the Contract Documents. Coordinate and submit concurrently with Contractor's construction schedule. Update as the Work progresses.
1. Distribution: Distribute schedule to Owner, Architect, Construction Manager, and Commissioning Authority, if applicable testing agencies, and each party involved in performance of portions of the Work where tests and inspections are required.

PART 2 PRODUCTS (NOT USED)

PART 3 EXECUTION

3.1 TEST AND INSPECTION LOG

A. Test and Inspection Log: Prepare a record of tests and inspections. Include the following:
1. Date test or inspection was conducted.

2. Description of the Work tested or inspected.
3. Date test or inspection results were transmitted to Architect.
4. Identification of testing agency or special inspector conducting test or inspection.

B. Maintain log at Project site. Post changes and revisions as they occur. Provide access to test and inspection log for Architect, Construction Manager, and Commissioning Authority, if applicable reference during normal working hours.

3.2 REPAIR AND PROTECTION

A. General: On completion of testing, inspecting, sample taking, and similar services, repair damaged construction and restore substrates and finishes.
1. Provide materials and comply with installation requirements specified in other Specification Sections or matching existing substrates and finishes. Restore patched areas and extend restoration into adjoining areas with durable seams that are as invisible as possible. Comply with the Contract Document requirements for cutting and patching in Section 017300 "Execution."

B. Protect construction exposed by or for quality-control service activities.

C. Repair and protection are Contractor's responsibility, regardless of the assignment of responsibility for quality-control services.

END OF SECTION 014000

SECTION 014200 - REFERENCES

PART 1 - GENERAL

1.1 RELATED DOCUMENTS

A. Drawings and general provisions of the Contract, including General and Supplementary Conditions and other Division 01 Specification Sections, apply to this Section.

1.2 DEFINITIONS

A. General: Basic Contract definitions are included in the Conditions of the Contract.

B. "Approved": When used to convey Architect's action on Contractor's submittals, applications, and requests, "approved" is limited to Architect's duties and responsibilities as stated in the Conditions of the Contract.

C. "Directed": A command or instruction by Architect or Owner Construction Manager. Other terms including "requested," "authorized," "selected," "approved," "required," and "permitted" have the same meaning as "directed."

D. "Indicated": Requirements expressed by graphic representations or in written form on Drawings, in Specifications, and in other Contract Documents. Other terms including "shown," "noted," "scheduled," and "specified" have the same meaning as "indicated."

E. "Regulations": Laws, ordinances, statutes, and lawful orders issued by authorities having jurisdiction, and rules, conventions, and agreements within the construction industry that control performance of the Work.

F. "Furnish": Supply and deliver to Project site, ready for unloading, unpacking, assembly, installation, and similar operations.

G. "Install": Operations at Project site including unloading, temporarily storing, unpacking, assembling, erecting, placing, anchoring, applying, working to dimension, finishing, curing, protecting, cleaning, and similar operations.

H. "Provide": Furnish and install, complete and ready for the intended use.

I. "Project Site": Space available for performing construction activities. The extent of Project site is shown on Drawings and may or may not be identical with the description of the land on which Project is to be built.

J. "Installer": Contractor or another entity engaged by Contractor as an employee, Subcontractor, or Sub-subcontractor, to perform a particular construction operation, including installation, erection, application, and similar operations.

1. Using a term such as "carpentry" does not imply that certain construction activities must be performed by accredited or unionized individuals of a corresponding generic name, such as "carpenter." It also does not imply that requirements specified apply exclusively to tradespeople of the corresponding generic name.

K. "Experienced": When used with an entity, "experienced" means having successfully completed a minimum of five previous projects similar in size and scope to this Project; being familiar with special requirements indicated; and having complied with requirements of authorities having jurisdiction.

1.3 INDUSTRY STANDARDS

A. Applicability of Standards: Unless the Contract Documents include more stringent requirements, applicable construction industry standards have the same force and effect as if bound or copied directly into the Contract Documents to the extent referenced. Such standards are made a part of the Contract Documents by reference.

B. Publication Dates: Comply with standards in effect as of date of the Contract Documents unless otherwise indicated.

C. Copies of Standards: Each entity engaged in construction on Project should be familiar with industry standards applicable to its construction activity. Copies of applicable standards are not bound with the Contract Documents.

1. Where copies of standards are needed to perform a required construction activity, obtain copies directly from publication source.

1.4 ABBREVIATIONS AND ACRONYMS

A. Industry Organizations: Where abbreviations and acronyms are used in Specifications or other Contract Documents, they shall mean the recognized name of the entities indicated in Gale's "Encyclopedia of Associations: National Organizations of the U.S." or in Columbia Books' "National Trade & Professional Associations of the United States."

B. Code Agencies: Where abbreviations and acronyms are used in Specifications or other Contract Documents, they shall mean the recognized name of the entities.

C. Federal Government Agencies: Where abbreviations and acronyms are used in Specifications or other Contract Documents, they shall mean the recognized name of the entities.

D. Standards and Regulations: Where abbreviations and acronyms are used in Specifications or other Contract Documents, they shall mean the recognized name of the standards and regulations.

E. State Government Agencies: Where abbreviations and acronyms are used in Specifications or other Contract Documents, they shall mean the recognized name of the entities.

PART 2 - PRODUCTS (Not Used)

PART 3 - EXECUTION (Not Used)

END OF SECTION 014200

SECTION 014533 - CODE-REQUIRED SPECIAL INSPECTIONS AND PROCEDURES

PART 1 GENERAL

1.1 SECTION INCLUDES

A. Code-required special inspections.

B. Testing services incidental to special inspections.

C. Submittals.

1.2 DEFINITIONS

A. Code or Building Code: ICC (IBC), International Building Code, most recent edition adopted by authority having jurisdiction, including all applicable amendments and supplements without limitation, and specifically Chapter 17 - Special Inspections and Tests.

B. Authority Having Jurisdiction (AHJ): Agency or individual officially empowered to enforce the building, fire and life safety code requirements of the permitting jurisdiction in which the Project is located.

C. NIST: National Institute of Standards and Technology.

D. Special Inspections and Tests: Inspections and testing of materials, installation, fabrication, erection, or placement of components and connections mandated by Building Code to safeguard public welfare.
   1. Special inspections and tests are separate from and independent of tests and inspections conducted by Owner or Contractor for purposes of quality assurance and contract administration.

1.3 GENERAL REQUIREMENTS

A. Provide Special Inspections and Structural Testing in accordance with Building Code.

B. Special Inspections and Structural Testing shall be in accordance with *CASE National Practice Guideline for Special Inspections*.

C. The program of Special Inspection and Structural Testing is a Quality Assurance program intended to ensure that the work is performed in accordance with the Contract Documents.

D. This specification section is intended to inform the Contractor of the Owner's quality assurance program and the extent of the Contractor's responsibilities. This specification section is also intended to notify the Special Inspector, Testing Laboratory, and other Agents of the Special Inspector of their requirements and responsibilities.

1.4 RELATED REQUIREMENTS

A. Section 014000 - Quality Requirements: for testing agency procedures and administrative requirements.

B. Section 033000 - Cast-in-Place Concrete : for Field Quality Control.

C. Section 051200 - Structural Steel Framing: for Field Quality Control.

D. Section 312323 - Fill: for Field Quality Control.

1.5 REFERENCE STANDARDS

A. ASTM E329 - Standard Specification for Agencies Engaged in Construction Inspection, Testing, or Special Inspection.

B. IAS AC89 - Accreditation Criteria for Testing Laboratories.

C. IAS AC291 - Accreditation Criteria for Special Inspection Agencies AC291.

D. ICC (IBC) - International Building Code.

1.6 SCHEDULE OF INSPECTIONS AND TESTS

A. Required inspections and tests are described in the individual Specification Sections for the items to be inspected or tested and the "***Schedule of Special Inspection Services***", which is included at the end of this Section.

B. The services and quantities of testing specified are approximate. Actual services and quantities of testing will be determined by the Owner and/or Structural Engineer of Record (SER) **[and Construction Manager]** during construction.

C. The Architect and Structural Engineer of Record (SER) [and Construction Manager] will determine the locations for taking sample specimens for testing in accordance with the specifications.

1.7 QUALIFICATIONS

A. The Special Inspector shall be a licensed Professional Engineer or Structural Engineer who is approved by the Structural Engineer of Record (SER) and Building Official.

B. The Testing Laboratory and individual technicians shall be approved by the Structural Engineer of Record (SER) and Building Official.

C. The testing laboratory shall maintain a full-time licensed Professional Engineer or Structural Engineer on staff who shall certify all test reports. The Engineer shall be responsible for the training of the testing technicians and shall be in responsible charge of the field and laboratory testing operations.

D. Special Inspections shall be performed by inspectors who are either licensed Professional Engineers (P.E.), Structural Engineers (S.E.), or Engineers-In-Training (EIT) with an education and background in structural engineering except as indicated below.

1. Special Inspections of soils and foundations may be performed by inspectors with an education and background in geotechnical engineering in lieu of a background in structural engineering.
2. Technicians performing sampling and testing of concrete shall be ACI certified Concrete Field Testing Technicians – Grade 1.
3. Inspectors performing inspections of concrete work such as inspections of concrete placement, batching, reinforcing placement, curing and protection, may be ACI certified Concrete Construction Inspectors or ICC certified Reinforced Concrete Special Inspector in lieu of being a licensed P.E., S.E., or EIT.
4. Technicians performing visual inspection of welding shall be AWS *Certified Welding Inspectors* or ICC certified *Structural Welding Special Inspectors* with one year relevant experience, technicians performing non-destructive testing such as ultrasonic testing, radiographic testing, magnetic particle testing, or dye-penetrant testing shall be certified as an ASNT-TC Level II or Level III technician.
5. Inspectors performing visual inspections of steel framing and high-strength bolting may be ICC certified *Structural Steel and Bolting Special Inspector* with one year relevant experience, in lieu of being a licensed P.E., S.E., or EIT.
6. Technicians performing standard tests described by specific ASTM Standards shall have training in the performance of such tests and must be able to demonstrate either by oral or written examination competence for the test to be conducted. They shall be under the supervision of a licensed Professional Engineer and shall not be permitted to independently evaluate test results.

1.8 SUBMITTALS

A. See Section 013000 - Administrative Requirements for submittal procedures.

B. Special Inspection Agency Qualifications: Prior to start of work, Special Inspection Agency is required to:
1. Submit agency name, address, and telephone number, names of full time registered Engineer and responsible officer.
2. Submit copy of report of laboratory facilities inspection made by NIST Construction Materials Reference Laboratory during most recent inspection, with memorandum of remedies of any deficiencies reported by the inspection.
3. Submit certification that Special Inspection Agency is acceptable to AHJ.
4. Submit documentation that Special Inspection Agency is accredited by IAS according to IAS AC291.

C. Testing Agency Qualifications: Prior to start of work, Testing Agency is required to:
1. Submit agency name, address, and telephone number, and names of full time registered Engineer and responsible officer.
2. Submit copy of report of laboratory facilities inspection made by NIST Construction Materials Reference Laboratory during most recent inspection, with memorandum of remedies of any deficiencies reported by the inspection.
3. Submit certification that Testing Agency is acceptable to AHJ.
4. Submit documentation that Testing Agency is accredited by IAS according to IAS AC89.

D. Special Inspection Reports: After each special inspection, Special Inspector is required to promptly submit at least two copies of report; one to Architect and one to the AHJ.
   1. Include:
      a. Date issued.
      b. Project title and number.
      c. Name of Special Inspector.
      d. Date and time of special inspection.
      e. Identification of product and specifications section.
      f. Location in the Project.
      g. Weather conditions.
      h. Type of special inspection.
      i. Date of special inspection.
      j. Results of special inspection.
      k. Compliance with contract documents.
      l. Signature of Special Inspector or Technician.
   2. Final Special Inspection Report: Document special inspections and correction of discrepancies prior to the start of the work.
   3. The Special Inspector shall submit interim reports to the Building Official, as required, which include all inspections and test reports received during that period. Copies shall be sent to the Owner, SER, Architect, and Contractor **[and Construction Manager]**.
   4. Any discrepancies from the Contract Documents found during a Special Inspection shall be immediately reported to the Contractor **[and Construction Manager]**. If the discrepancies are not corrected, the Special Inspector shall notify the Owner, SER, Architect, and Building Official. Reports shall document all discrepancies identified and the corrective action taken.
   5. The Testing Laboratory shall immediately notify the Special Inspector and the SER by telephone, fax, or e-mail of any results which fail to comply with the requirements of the Contract Documents.
   6. Reports shall be submitted to the Special Inspector within 7 calendar days of the inspection or test. Hand written reports may be submitted if final typed copies are not available.
   7. At the completion of the work requiring Special Inspections, each inspection agency and testing laboratory shall provide a statement to the Special Inspector that all work was completed in substantial conformance with the Contract Documents and that all appropriate inspections and tests were performed.

E. Certificates: When required by AHJ, Special Inspector will submit certification by manufacturer, fabricator, and installation subcontractor to Architect and AHJ.
   1. Indicate material or product complies with or exceeds specified requirements. Submit supporting reference data, affidavits, and certifications as appropriate.
   2. Certificates may be recent or previous test results on material or product, but must be acceptable to Architect and AHJ.

1.9 SPECIAL INSPECTION AND TESTING AGENCY

A. Owner will employ services of a Special Inspection Agency to perform inspections and associated testing and sampling in accordance with ASTM E329 and required by the building code.

B. Special Inspection Agency may delegate to independent testing agency to perform testing and sampling associated with special inspections and required by building code.

C. Employment of agency in no way relieves Contractor of obligation to perform work in accordance with requirements of contract documents.

D. The Special Inspector and Testing Laboratory shall disclose any past or present business relationship or potential conflict of interest with the Contractor or any of the Subcontractors whose work will be inspected or tested.

1.10 TESTING AND INSPECTION AGENCIES

A. Owner may employ services of an independent testing agency to perform additional testing and sampling associated with special inspections but not required by the building code.

B. Employment of agency in no way relieves Contractor of obligation to perform work in accordance with requirements of contract documents.

1.11 PAYMENT

A. The Owner shall engage and pay for the services of the Special Inspector, Agents of the Special Inspector, and Testing Laboratory.

B. If any materials which require Special Inspections are fabricated in a plant which is not located within 100 miles of the project, the Contractor shall be responsible for the travel expenses of the Special Inspector or Testing Laboratory.

C. The Contractor shall be responsible for the cost of any retesting or reinspection of work which fails to comply with the requirements of the Contract Documents.

1.12 QUALITY ASSURANCE

A. Special Inspection Agency Qualifications:
   1. Independent firm specializing in performing testing and inspections of the type specified in this section.
   2. Accredited by IAS according to IAS AC291.

B. Testing Agency Qualifications:
   1. Independent firm specializing in performing testing and inspections of the type specified in this section.
   2. Accredited by IAS according to IAS AC89.

C. Copies of Documents at Project Site: Maintain at the project site a copy of each referenced document.

PART 2 PRODUCTS - NOT USED

PART 3 EXECUTION

3.1 SPECIAL INSPECTIONS AND TESTING

A. The Code requires special inspections and testing of certain materials, components, assemblies, and connections used in constructing the project. Special inspections and testing will be performed in accordance with the Code.

B. Special inspections and testing will be performed in accordance with the Code for the following materials and project components:
   1. Steel.
   2. Concrete.
   3. Soils.

3.2 SPECIAL INSPECTION AGENCY DUTIES AND RESPONSIBILITIES

A. Special Inspection Agency shall:
   1. Verify samples submitted by Contractor comply with the referenced standards and the approved Contract Documents.
   2. Provide qualified personnel at site. Cooperate with Architect and Contractor in performance of services.
   3. Perform specified sampling and testing of products in accordance with specified reference standards.
   4. Ascertain compliance of materials and products with requirements of Contract Documents.
   5. Promptly notify Architect and Contractor of observed irregularities or non-compliance of work or products.
   6. Perform additional tests and inspections required by Architect.
   7. Attend preconstruction meetings and progress meetings.
   8. Submit reports of all tests or inspections specified.

B. Limits on Special Inspection Agency Authority:
   1. Agency may not release, revoke, alter, or enlarge on requirements of Contract Documents.
   2. Agency may not approve or accept any portion of the work.
   3. Agency may not assume any duties of Contractor and will not have control over the Contractor's means and methods of construction.
   4. Agency has no authority to stop the work.
   5. Agency is not responsible for construction site safety.

C. Re-testing required because of non-compliance with specified requirements shall be performed by the same agency on instructions by Architect.

D. Re-testing required because of non-compliance with specified requirements shall be paid for by Contractor.

E. Statement of Special Inspections: The ***Statement of Special Inspections*** will be prepared by the Structural Engineer of Record (SER) and shall be submitted with the application for Building Permit.

F. Final Report of Special Inspections: The ***Final Report of Special Inspections*** shall be completed by the Special Inspector and submitted to the Owner, Contractor, SER and Building Official prior to the issuance of a Certificate of Use and Occupancy. The ***Final Report of Special Inspections*** will certify that all required inspections have been performed and will itemize any discrepancies that were not corrected or resolved.

3.3 TESTING AGENCY DUTIES AND RESPONSIBILITIES

A. Testing Agency Duties:
1. Test samples submitted by Contractor.
2. Provide qualified personnel at site. Cooperate with Architect and Contractor in performance of services.
3. Perform specified sampling and testing of products in accordance with specified standards.
4. Ascertain compliance of materials and mixes with requirements of Contract Documents.
5. Promptly notify Architect and Contractor of observed irregularities or non-compliance of work or products.
6. Perform additional tests and inspections required by Architect.
7. Submit reports of all tests or inspections specified.

B. Limits on Testing or Inspection Agency Authority:
1. Agency may not release, revoke, alter, or enlarge on requirements of Contract Documents.
2. Agency may not approve or accept any portion of the work.
3. Agency may not assume any duties of Contractor.
4. Agency has no authority to stop the work.
5. Agency is not responsible for construction site safety.

C. On instructions by Architect, perform re-testing required because of non-compliance with specified requirements, using the same agency.

D. Contractor will pay for re-testing required because of non-compliance with specified requirements.

3.4 CONTRACTOR DUTIES AND RESPONSIBILITIES

A. **Without exception, work which fails to comply with the requirements of the Contract Documents or work which has not been inspected is to be immediately removed and replaced, at the Contractor's cost.**

B. Contractor Responsibilities, General:
1. Deliver to agency at designated location, adequate samples of materials for special inspections that require material verification. The Contractor shall cooperate with the Special Inspector and his agents so that the Special Inspections and testing may be performed without hindrance.

2. Cooperate with agency and laboratory personnel; provide access to approved documents at project site, to the work, to manufacturers' facilities, and to fabricators' facilities.
3. The Contractor shall provide incidental labor and facilities to provide access to the work to be inspected or tested, to obtain and handle samples at the site or at source of products to be tested, to facilitate tests and inspections, storage and curing of test samples:
    a. To provide access to work to be tested or inspected.
    b. To obtain and handle samples at the site or at source of Products to be tested or inspected.
    c. When source, quality or characteristic of an approved material changes or indicates lack of compliance with Contract requirements, submit additional samples of materials to testing laboratory.
    d. To facilitate tests or inspections.
    e. To provide storage and curing of test samples.
    f. Patch area where samples are taken for purposes of testing to the satisfaction of the Architect and SER.
4. The Contractor shall review the Statement of Special Inspections and shall be responsible for coordinating and scheduling inspections and tests. Notify Architect and laboratory 24 hours prior to expected time for operations requiring testing or inspection services. Uninspected work that required inspection may be rejected solely on failure of notification.
5. Arrange with Owner's agency and pay for additional samples, tests, and inspections required by Contractor beyond specified requirements.
6. Retain special inspection records.
7. The Special Inspection program shall in no way relieve the Contractor of his obligation to perform work in accordance with the requirements of the Contract Documents or from implementing an effective Quality Control program. All work that is to be subjected to Special Inspections shall first be reviewed by the Contractor’s quality control personnel.
8. The Contractor shall be solely responsible for construction site safety.

SCHEDULE OF SPECIAL INSPECTION SERVICES
Project: PVTA UMass Lift Replacement
Location: 185 Holdsworth, Amherst, MA 01003

A. The following sheets comprise the required schedule of special inspections for this project. The construction divisions which require special inspections for this project are as follows:
1. Soils and Foundations
2. Concrete Construction
3. Steel Construction

B.

Inspection Agents:	Firm:	Address:
Special Inspector:		
Testing Agency:		
Testing Agency:		
Other:		

C. The qualifications of all personnel performing Special Inspection activities are subject to the approval of the Building Official.

D. The inspectors and testing agencies shall be engaged by the Owner or the Owner's Agent, and not by the Contractor or Subcontractor whose work is to be inspected or tested. Any conflict of interest must be disclosed to the Building Official, prior to commencing work.

E. The credentials of all Inspectors and testing technicians shall be provided if requested.

F. It is recommended that the person administering the Special Inspections program be a Professional Engineer experienced in the design of buildings.

G.

Minimum Qualifications	Key for Minimum Qualifications of Inspection Agents (where indicated on Schedules)
PE/SE	Structural Engineer – a licensed SE or PE specializing in the design of building structures
PE/GE	Geotechnical Engineer – a licensed PE specializing in soil mechanics and foundations
EIT	Engineering in Training – a graduate engineer who has passed the FE exam
ACI-CFTT	American Concrete Institute Certified Concrete Field Testing Technician
ACI-CCI	American Concrete Institute Certified Concrete Field Testing Technician
ACI-LTT	American Concrete Institute Certified Concrete Field Testing Technician
ACI-STT	American Concrete Institute Certified Concrete Field Testing Technician

Minimum Qualifications	Key for Minimum Qualifications of Inspection Agents (where indicated on Schedules)
AWS-CWI	American Welding Society Certified Welding Inspector
AWS/AISC-SSI	American Welding Society Certified Structural Steel Inspector
ASNT	American Society of Non-Destructive Testing - Level II or III
ICC -SWSI	International Code Council Certified Structural Steel and Welding Special Inspector
ICC -RCSI	International Code Council Certified Reinforced Concrete Special Inspector
NICET-CT	Concrete Technician – Levels I, II, III & IV
NICET -ST	Soils Technician – Levels I, II, III & IV
NICET -GET	Geotechnical Engineering Technician – Levels I, II, III & IV

H. Soils and Foundation Schedule

Verification & Inspection Task	Continuous	Periodic	Referenced Standard	Bldg Code Reference	Agent No.(Qualif.)
SOILS INSPECTIONS			**Specification Section 312000**	**1705.6**	
Verify materials below footings and foundations are adequate to achieve the design bearing capacity.	-	X			PE/GE
Verify excavations are extended to proper depth and have reached proper material.	-	X			PE/GE
Perform classification and testing of compacted fill materials.	-	X			PE/GE
Verify use of proper materials, densities and lift thicknesses during placement and compaction of compacted fill.	X	-			PE/GE
Prior to placement of compacted fill, inspect subgrade and verify that site has been prepared properly.	-	X			PE/GE

I. Concrete Construction Schedule

Verification & Inspection Task	Continuous	Periodic	Referenced Standard	Bldg Code Reference	Agent No.(Qualif.)
CONCRETE CONSTRUCTION			**Specification Section 033000**	**1705.3**	

Verification & Inspection Task	Continuous	Periodic	Referenced Standard	Bldg Code Reference	Agent No.(Qualif.)
Inspection of reinforcing steel and placement.	-	X	ACI 318 Ch. 20, 25.2, 25.3, 26.5.1-26.5.3	1908.4	ACI-CCI ICC-RCSI
Reinforcing bar welding: a. Verify weldability of reinforcing bars other than ASTM A706; b. Inspect single-pass fillet welds, maximum 5/16”; and c. Inspect all other welds.	- - X	X X -	AWS D1.4ACI 318: 26.5.4	1705.3.1	
Inspect anchors cast in concrete.	-	X	ACI 318: 17.8.2		
Inspect anchors post-installed in hardened concrete members. a. Adhesive anchors installed in horizontally or upwardly inclined orientations to resist sustained tension loads. b. Mechanical anchors and adhesive anchors not defined in section “a”.	X -	- X	ACI 318: 17.8.2.4ACI 318: 17.8.2		
Verifying use of required design mix.	-	X	ACI 318: Ch. 19, 26.4.3, 26.4.4	1904.1, 1904.2, 1908.2, 1908.3	ACI-CCI ICC-RCSI
Prior to concrete placement, fabricate specimens for strength tests, perform slump and air content tests, and determine the temperature of the concrete.	X	-	ASTM C 172ASTM C 31ACI 318: 26.4.5, 26.12	1908.10	ACI-CCI ICC-RCSI
Inspect concrete placement for proper application techniques.	X	-	ACI 318: 26.4.5	1908.6, 1908.7, 1908.8	ACI-CCI ICC-RCSI
Verify maintenance of specified curing temperature and techniques.	-	X	ACI 318: 26.4.7-26.4.9	1908.9	ACI-CCI ICC-RCSI
Inspect formwork for shape, location and dimensions of	-	X	ACI 318: 26.10.1(b)		

Verification & Inspection Task	Continuous	Periodic	Referenced Standard	Bldg Code Reference	Agent No.(Qualif.)
concrete member being formed.					

J. Structural Steel Construction

Verification & Inspection Task	Continuous	Periodic	Referenced Standard	Bldg Code Reference	Agent No. (Qualif.)
STRUCTURAL STEEL CONSTRUCTION			**Specification Section 051200**	**1705.2**	
Material verification of structural steel:					AWS/ AISC SSI ICC-SWSI
a. Identification markings to conform to ASTM standards specified in the approved construction documents. b. Manufacturers' certified mill test reports.	- -	X X	AISC 360, Section M5.5;Applicable ASTM material standards		
Material verification of weld filler materials:			AISC 360, Section A3.5;Applicable AWS A5 documents		AWS/ AISC SSI ICC-SWSI
a. Identification markings to conform to AWS specification in the approved construction documents. b. Manufacturer's certificate of compliance required.	- -	X X			
Inspection of welding:			AWS D1.1	1705.2	AWS-CWI ASNT
1) Complete and partial penetration groove welds.	X	-			
2) Multi-pass fillet welds.	X	-			
3) Single-pass fillet welds > 5/16.	X	-			
4) Single-pass fillet welds < 5/16.	-	X			
b. Reinforcing steel:			AWS D1.4	1705.3.1	

Verification & Inspection Task	Continuous	Periodic	Referenced Standard	Bldg Code Reference	Agent No. (Qualif.)
1) Verification of weldability of reinforcing steel other than ASTM A 706.	-	X	ACI 318: 3.5.2		

STATEMENT OF SPECIAL INSPECTIONS

Project: PVTA UMass Lift Replacement

Location: 185 Holdsworth, Amherst, MA 01003

Architect of Record:

Structural Engineer of Record: Wendel WD Architecture, Engineering, Surveying and Landscape Architecture, P.C.

This Statement of Special Inspections is submitted as a condition for permit issuance in accordance with the Special Inspection requirements of the Building Code. It includes the Schedule of Special Inspection Services applicable to this project as well as the name of the Special Inspector and the identity of other approved agencies intended to be retained for conducting these inspections.

The Special Inspector shall keep records of all inspections and shall furnish inspection reports to the Building Official, Structural Engineer and Architect of Record. Discovered discrepancies shall be brought to the immediate attention of the Contractor for correction. If such discrepancies are not corrected, the discrepancies shall be brought to the attention of the Building Official, Structural Engineer and Architect of Record. The Special Inspection program does not relieve the Contractor of his or her responsibilities.

Interim reports shall be submitted to the Building Official, Owner, Structural Engineer and Architect of Record.

A Final Report of Special Inspections documenting completion of all required Special Inspections and correction of any discrepancies noted in the inspections shall be submitted prior to issuance of a Certificate of Use and Occupancy.

Job site safety and means and methods of construction are solely the responsibility of the Contractor.

Prepared by:

_____
(Type or print name)

_____
Signature Date

Design Professional's Seal

Owner's Authorization:

Building Official's Acceptance:

_____	_____
Signature Date	Signature Date

FINAL REPORT OF SPECIAL INSPECTIONS
Project: PVTA UMass Lift Replacement
Location: 185 Holdsworth, Amherst, MA 01003
Special Inspector:
To the best of my information, knowledge and belief, the Special Inspections required for this project, and itemized in the ***Statement of Special Inspections*** submitted for permit, have between performed and all discovered discrepancies have been reported and resolved other than the following:
Comments: (Attach continuation sheets if required to complete the description of corrections.)
Interim reports submitted prior to this final report form a basis for and are to be considered an integral part of this final report.
Respectfully Submitted, Special Inspector

_____
(Type or print name)

_____
Signature Date

Design Professional's Seal

END OF SECTION 014533

SECTION 015000 - TEMPORARY FACILITIES AND CONTROLS

PART 1 - GENERAL

1.1 RELATED DOCUMENTS

A. Drawings and general provisions of the Contract, including General and Supplementary Conditions and other Division 01 Specification Sections, apply to this Section.

1.2 SUMMARY

A. Section includes requirements for temporary utilities, support facilities, and security and protection facilities.

1.3 USE CHARGES

A. General: Installation and removal of and use charges for temporary facilities shall be included in the Contract Sum unless otherwise indicated. Allow other entities to use temporary services and facilities without cost, including, but not limited to Architect, testing agencies, and authorities having jurisdiction.

B. Water and Sewer Service from Existing System: Water from Owner's existing water system is available for use without metering and without payment of use charges. Provide connections and extensions of services as required for construction operations and return to original configuration upon completion of construction.

C. Electric Power Service from Existing System: Electric power from Owner's existing system is available for use without metering and without payment of use charges. Provide connections and extensions of services as required for construction operations and return to original configuration upon completion of construction.

1.4 INFORMATIONAL SUBMITTALS

A. Site Plan: Show temporary facilities, partitions, fencing, signage locations, utility hookups, staging areas, and parking areas for construction personnel.

B. Temporary Enclosure: Submit coordination drawing indicating wall section and materials to be used. Include framing, gypsum wallboard sheathing and insulation.

1.5 QUALITY ASSURANCE

A. Electric Service: Comply with NECA, NEMA, and UL standards and regulations for temporary electric service. Install service to comply with NFPA 70.

B. Tests and Inspections: Arrange for authorities having jurisdiction to test and inspect each temporary utility before use. Obtain required certifications and permits.

C. Accessible Temporary Egress: Comply with applicable provisions in the U.S. Architectural & Transportation Barriers Compliance Board's ADA-ABA Accessibility Guidelines, ICC/ANSI A117.1 and local jurisdictional requirements, whichever is more stringent.

1.6 PROJECT CONDITIONS

A. Temporary Use of Permanent Facilities: Engage Installer of each permanent service to assume responsibility for operation, maintenance, and protection of each permanent service during its use as a construction facility before Owner's acceptance, regardless of previously assigned responsibilities.

PART 2 - PRODUCTS

2.1 MATERIALS

A. Polyethylene Sheet: Reinforced, fire-resistive sheet, 10-mil minimum thickness, with flame-spread rating of 15 or less per ASTM E 84 and passing NFPA 701 Test Method 2.

B. Dust-Control Adhesive-Surface Walk-off Mats: Provide mats minimum 36 by 60 inches.

C. Insulation: Unfaced mineral-fiber blanket, manufactured from glass, slag wool, or rock wool; with maximum flame-spread and smoke-developed indexes of 25 and 50, respectively.

2.2 EQUIPMENT

A. Fire Extinguishers: Portable, UL rated; with class and extinguishing agent as required by locations and classes of fire exposures.

PART 3 - EXECUTION

3.1 INSTALLATION, GENERAL

A. Locate facilities where they will serve Project adequately and result in minimum interference with performance of the Work. Relocate and modify facilities as required by progress of the Work.

B. Provide each facility ready for use when needed to avoid delay. Do not remove until facilities are no longer needed or are replaced by authorized use of completed permanent facilities.

3.2 TEMPORARY UTILITY INSTALLATION

A. General: Install temporary service or connect to existing service.

1. Arrange with utility company, Owner, and existing users for time when service can be interrupted, if necessary, to make connections for temporary services.

B. Water Service: Connect to Owner's existing water service facilities. Clean and maintain water service facilities in a condition acceptable to Owner. At Substantial Completion, restore these facilities to condition existing before initial use.

C. Isolation of Work Areas in Occupied Facilities: Prevent dust, fumes, and odors from entering occupied areas.

1. Maintain dust partitions during the Work. Use vacuum collection attachments on dust-producing equipment. Isolate limited work within occupied areas using portable dust-containment devices.
2. Perform daily construction cleanup and final cleanup.

D. Electric Power Service: Connect to Owner's existing electric power service. Maintain equipment in a condition acceptable to Owner.

3.3 SUPPORT FACILITIES INSTALLATION

A. Waste Disposal Facilities: Provide waste-collection containers in sizes adequate to handle waste from construction operations. Comply with requirements of authorities having jurisdiction. Comply with progress cleaning requirements in Section 017300 "Execution."

B. Lifts and Hoists: Provide facilities necessary for hoisting materials and personnel.

1. Truck cranes and similar devices used for hoisting materials are considered "tools and equipment" and not temporary facilities.

2. Provide protective coverings, barriers, devices, signs, or other procedures to protect stairs and to maintain means of egress. If stairs become damaged, restore damaged areas so no evidence remains of correction work.

3.4 SECURITY AND PROTECTION FACILITIES INSTALLATION

A. Security: Contractor to ensure that the facility can be secured by the Owner at the end of each working day.

B. Protection of Existing Facilities: Protect existing vegetation, equipment, structures, utilities, and other improvements at Project site and on adjacent properties, except those indicated to be removed or altered. Repair damage to existing facilities.

C. Environmental Protection: Provide protection, operate temporary facilities, and conduct construction as required to comply with environmental regulations and that minimize possible air, waterway, and subsoil contamination or pollution or other undesirable effects.

1. Comply with work restrictions specified in Section 011000 "Summary."

D. Barricades, Warning Signs, and Lights: Comply with requirements of authorities having jurisdiction for erecting structurally adequate barricades, including warning signs and lighting.

E. Temporary Egress: Maintain temporary egress from existing occupied facilities as indicated and as required by authorities having jurisdiction.

F. Temporary Enclosures: Provide temporary enclosures for protection of construction, in progress and completed, from exposure, foul weather, other construction operations, and similar activities. Provide temporary weathertight enclosure for building exterior.

G. Temporary Partitions: Provide floor-to-ceiling dustproof partitions to limit dust and dirt migration and to separate areas occupied by Owner from fumes and noise.
1. Construct dustproof partitions with gypsum wallboard with joints taped.
2. Where fire-resistance-rated temporary partitions are indicated or are required by authorities having jurisdiction, construct partitions according to the rated assemblies.
3. Insulate partitions to control noise transmission to occupied areas.
4. Seal joints and perimeter. Equip partitions with gasketed dustproof doors and security locks where openings are required.
5. Protect air-handling equipment.
6. Provide walk-off mats at each entrance through temporary partition.
7. Partitions to be located along column line H.1 between 3 and 3.1 (with door) and between H.1 and J (with door) at the end of the chassis bay. Coordinate final locations with Owner and Architect in field prior to construction.
8. Partitions to be provided prior to the start of demolition.

3.5 OPERATION, TERMINATION, AND REMOVAL

A. Termination and Removal: Remove each temporary facility when need for its service has ended, when it has been replaced by authorized use of a permanent facility, or no later than Substantial Completion. Complete or, if necessary, restore permanent construction that may have been delayed because of interference with temporary facility. Repair damaged Work, clean exposed surfaces, and replace construction that cannot be satisfactorily repaired.

1. Materials and facilities that constitute temporary facilities are property of Contractor. Owner reserves right to take possession of Project identification signs.
2. Repair or replace street paving, curbs, and sidewalks at temporary entrances, as required by authorities having jurisdiction.
3. At Substantial Completion, repair, renovate, and clean permanent facilities used during construction period. Comply with final cleaning requirements specified in Section 017700 "Closeout Procedures."

END OF SECTION 015000

SECTION 016000 - PRODUCT REQUIREMENTS

PART 1 - GENERAL

1.1 RELATED DOCUMENTS

A. Drawings and general provisions of the Contract including General and Supplementary Conditions and other Division 01 Specification Sections apply to this Section.

1.2 SUMMARY

A. Section includes administrative and procedural requirements for selection of products for use in Project, product delivery, storage, handling, manufacturers' standard warranties on products, special warranties and comparable products.

1.3 DEFINITIONS

A. Products: Items obtained for incorporating into the Work, whether purchased for Project or taken from previously purchased stock. The term "product" includes the terms "material," "equipment," "system" and terms of similar intent.

1. Named Products: Items identified by manufacturer's product name, including make or model number or other designation shown or listed in manufacturer's published product literature that is current as of date of the Contract Documents.
2. New Products: Items that have not previously been incorporated into another project or facility. Products salvaged, reused or repurposed from other projects are not considered new products.
3. Comparable Product: Product that is demonstrated and approved through submittal process to have the indicated qualities related to type, function, dimension, in-service performance, physical properties, appearance and other characteristics that are equivalent or exceed those of specified product.

B. Basis-of-Design Product Specification: A specification in which a specific manufacturer's product is named and accompanied by the words "basis of design" or “basis of design product" including make, model number or other designation to establish the significant qualities related to type, function, dimension, in-service performance, physical properties, appearance and other characteristics for purposes of evaluating comparable products of additional manufacturers named in the specification.

1.4 ACTION SUBMITTALS

A. Comparable Product Requests: Submit request for consideration of each comparable product. Identify product or fabrication or installation method to be replaced. Include Specification Section number and title and Drawing numbers and titles.

1. Include data to indicate compliance with the requirements specified in "Comparable Products" Article.
2. Architect's Action: If necessary Architect will request additional information or documentation for evaluation within one week of receipt of a comparable product request. Architect will notify Contractor through Construction Manager of approval or rejection of proposed comparable product request within 15 business days of receipt of request, or five business days of receipt of additional information or documentation, whichever is later.

    a. Form of Approval: As specified in Section 013300 Submittal Procedures.
    b. Use product specified if Architect does not issue a decision on use of a comparable product request within time allocated.

B. Basis of Design Product Specification Submittal: Comply with requirements in Section 013300 Submittal Procedures. Show compliance with requirements.

1.5 QUALITY ASSURANCE

A. Compatibility of Options: If Contractor is given option of selecting between two or more products for use on Project, select product compatible with products previously selected, even if previously selected products were also options.

1. Each contractor is responsible for providing products and construction methods compatible with products and construction methods of other contractors.
2. If a dispute arises between contractors over concurrently selectable but incompatible products, Architect will determine which products shall be used.

1.6 PRODUCT DELIVERY, STORAGE, AND HANDLING

A. Deliver, store, and handle products using means and methods that will prevent damage, deterioration, and loss, including theft and vandalism. Comply with manufacturer's written instructions.

B. Delivery and Handling:

1. Schedule delivery to minimize long-term storage at Project site and to prevent overcrowding of construction spaces.
2. Coordinate delivery with installation time to ensure minimum holding time for items that are flammable, hazardous, easily damaged, or sensitive to deterioration, theft, and other losses.
3. Deliver products to Project site in an undamaged condition in manufacturer's original sealed container or other packaging system, complete with labels and instructions for handling, storing, unpacking, protecting and installing.
4. Inspect products on delivery to determine compliance with the Contract Documents and to determine that products are undamaged and properly protected.

C. Storage:

1. Store products to allow for inspection and measurement of quantity or counting of units.
2. Store materials in a manner that will not endanger Project structure.
3. Store products that are subject to damage by the elements, under cover in a weather tight enclosure above ground, and with ventilation adequate to prevent condensation.
4. Protect foam plastic from exposure to sunlight, except to extent necessary for period of installation and concealment by covering construction.
5. Comply with product manufacturer's written instructions for temperature, humidity, ventilation, and weather-protection requirements for storage.
6. Protect stored products from damage, and liquids from freezing.
7. Provide a secure location and enclosure at Project site for storage of materials and equipment by Owner's construction forces. Coordinate location and security procedures with Owner.

1.7 PRODUCT WARRANTIES

A. Warranties specified in other Sections shall be in addition to, and run concurrent with, other warranties required by the Contract Documents. Manufacturer's disclaimers and limitations on product warranties do not relieve Contractor of obligations under requirements of the Contract Documents.

1. Manufacturer's Warranty: Written warranty furnished by individual manufacturer for a particular product and specifically endorsed by manufacturer to Owner.
2. Special Warranty: Written warranty required by the Contract Documents to provide specific rights for Owner.

B. Special Warranties: Prepare a written document that contains appropriate terms and identification, ready for execution.

1. Manufacturer's Standard Form: Modified to include Project-specific information and properly executed.
2. Specified Form: When specified forms are included with the Specifications, prepare a written document using indicated form properly executed.
3. See other Sections for specific content requirements and particular requirements for submitting special warranties.

C. Submittal Time: Comply with requirements in Section 017700 Closeout Procedures.

PART 2 - PRODUCTS

2.1 PRODUCT SELECTION PROCEDURES

A. General Product Requirements: Provide products that comply with the Contract Documents, are undamaged and, unless otherwise indicated, are new at time of installation.

1. Provide products complete with accessories, trim, finish, fasteners, and other items needed for a complete installation and indicated use and effect.

2. Standard Products: If available, and unless custom products or nonstandard options are specified, provide standard products of types that have been produced and used successfully in similar situations on other projects.
3. Owner reserves the right to limit selection to products with warranties not in conflict with requirements of the Contract Documents.
4. Where products are accompanied by the term "as selected," Architect will make selection.
5. Descriptive, performance, and reference standard requirements in the Specifications establish salient characteristics of products.
6. Or Equal: For products specified by name and accompanied by the term "or equal," "or approved equal," or "or approved," comply with requirements in "Comparable Products" Article to obtain approval for use of an unnamed product.

B. Product Selection Procedures:

1. Product: Where Specifications name a single manufacturer and product, provide the named product that complies with requirements. Comparable products for Contractor's convenience will not be considered.
2. Manufacturer/Source: Where Specifications name a single manufacturer or source, provide a product by the named manufacturer or source that complies with requirements. Comparable products for Contractor's convenience will not be considered.
3. Products:

    a. Restricted List: Where Specifications include a list of names of both manufacturers and products, provide one of the products listed that complies with requirements. Comparable products for Contractor's convenience will not be considered unless otherwise indicated.
    b. Nonrestricted List: Where Specifications include a list of names of both available manufacturers and products, provide one of the products listed, or an unnamed product, that complies with requirements. Comply with requirements in "Comparable Products" Article for consideration of an unnamed product.

4. Manufacturers:

    a. Restricted List: Where Specifications include a list of manufacturers' names, provide a product by one of the manufacturers listed that complies with requirements. Comparable products for Contractor's convenience will not be considered unless otherwise indicated.
    b. Nonrestricted List: Where Specifications include a list of available manufacturers, provide a product by one of the manufacturers listed, or a product by an unnamed manufacturer, that complies with requirements. Comply with requirements in "Comparable Products" Article for consideration of an unnamed manufacturer's product.

5. Basis of Design Product: Where Specifications name a product, or refer to a product indicated on Drawings, and include a list of manufacturers, provide the specified or indicated product or a comparable product by one of the other named manufacturers. Drawings and Specifications indicate sizes, profiles, dimensions, and other characteristics that are based on the product named. Comply with requirements in "Comparable

Products" Article for consideration of an unnamed product by one of the other named manufacturers.

C. Visual Matching Specification: Where Specifications require "match Architect's sample", provide a product that complies with requirements and matches Architect's sample. Architect's decision will be final on whether a proposed product matches.

D. Visual Selection Specification: Where Specifications include the phrase "as selected by Architect from manufacturer's full range" or similar phrase, select a product that complies with requirements. Architect will select color, gloss, pattern, density, or texture from manufacturer's product line that includes both standard and premium items.

2.2 COMPARABLE PRODUCTS

A. Conditions for Consideration: Architect will consider Contractor's request for comparable product when the following conditions are satisfied. If the following conditions are not satisfied, Architect may return requests without action, except to record noncompliance with these requirements:

1. Evidence that the proposed product does not require revisions to the Contract Documents, and that it is consistent with the Contract Documents and will produce the indicated results, and that it is compatible with other portions of the Work.
2. Detailed comparison of significant qualities of proposed product with those named in the Specifications. Significant qualities include attributes such as performance, weight, size, durability, visual effect, and specific features and requirements indicated.
3. Evidence that proposed product provides specified warranty.
4. List of similar installations for completed projects with project names and addresses and names and addresses of Architects and Owners, if requested.
5. Samples, if requested.

PART 3 - EXECUTION (Not Used)

END OF SECTION 016000

SECTION 017300 - EXECUTION

PART 1 - GENERAL

1.1 RELATED DOCUMENTS

A. Drawings and general provisions of the Contract, including General and Supplementary Conditions and other Division 01 Specification Sections, apply to this Section.

1.2 SUMMARY

A. Section includes general administrative and procedural requirements governing execution of the Work including, but not limited to, the following:

1. Construction layout.
2. Field engineering and surveying.
3. Installation of the Work.
4. Cutting and patching.
5. Correction of work.
6. Coordination of Owner-installed products.
7. Progress cleaning.
8. Starting and adjusting.
9. Protection of installed construction.

1.3 DEFINITIONS

A. Cutting: Removal of in-place construction necessary to permit installation or performance of other work.

B. Patching: Fitting and repair work required to restore construction to original conditions after installation of other work.

1.4 INFORMATIONAL SUBMITTALS

A. Landfill Receipts: Submit copy of receipts issued by a landfill facility, licensed to accept hazardous materials, for hazardous waste disposal.

1.5 QUALITY ASSURANCE

A. Cutting and Patching: Comply with requirements for and limitations on cutting and patching of construction elements.

1. Structural Elements: When cutting and patching structural elements, notify Architect of locations and details of cutting and await directions from Architect before proceeding.

Shore, brace, and support structural elements during cutting and patching. Do not cut and patch structural elements in a manner that could change their load-carrying capacity or increase deflection

2. Operational Elements: Do not cut and patch operating elements and related components in a manner that results in reducing their capacity to perform as intended or that results in increased maintenance or decreased operational life or safety
3. Other Construction Elements: Do not cut and patch other construction elements or components in a manner that could change their load-carrying capacity, that results in reducing their capacity to perform as intended, or that results in increased maintenance or decreased operational life or safety
4. Visual Elements: Do not cut and patch construction in a manner that results in visual evidence of cutting and patching. Do not cut and patch exposed construction in a manner that would, in Architect's opinion, reduce the building's aesthetic qualities. Remove and replace construction that has been cut and patched in a visually unsatisfactory manner.

B. Manufacturer's Installation Instructions: Obtain and maintain on-site manufacturer's written recommendations and instructions for installation of products and equipment.

PART 2 - PRODUCTS

2.1 MATERIALS

A. General: Comply with requirements specified in other Sections.

B. In-Place Materials: Use materials for patching identical to in-place materials. For exposed surfaces, use materials that visually match in-place adjacent surfaces to the fullest extent possible.

1. If identical materials are unavailable or cannot be used, use materials that, when installed, will provide a match acceptable to Architect for the visual and functional performance of in-place materials.

PART 3 - EXECUTION

3.1 EXAMINATION

A. Existing Conditions: The existence and location of underground and other utilities and construction indicated as existing are not guaranteed. Before beginning sitework, investigate and verify the existence and location of underground utilities, mechanical and electrical systems, and other construction affecting the Work.

1. Before construction, verify the location and invert elevation at points of connection of sanitary sewer, storm sewer, and water-service piping; underground electrical services, and other utilities.

2. Furnish location data for work related to Project that must be performed by public utilities serving Project site.

B. Examination and Acceptance of Conditions: Before proceeding with each component of the Work, examine substrates, areas, and conditions, with Installer or Applicator present where indicated, for compliance with requirements for installation tolerances and other conditions affecting performance. Record observations.

1. Examine roughing-in for mechanical and electrical systems to verify actual locations of connections before equipment and fixture installation.
2. Examine walls, floors, and roofs for suitable conditions where products and systems are to be installed.
3. Verify compatibility with and suitability of substrates, including compatibility with existing finishes or primers.

C. Written Report: Where a written report listing conditions detrimental to performance of the Work is required by other Sections, include the following:

1. Description of the Work.
2. List of detrimental conditions, including substrates.
3. List of unacceptable installation tolerances.
4. Recommended corrections.

D. Proceed with installation only after unsatisfactory conditions have been corrected. Proceeding with the Work indicates acceptance of surfaces and conditions.

3.2 PREPARATION

A. Field Measurements: Take field measurements as required to fit the Work properly. Recheck measurements before installing each product. Where portions of the Work are indicated to fit to other construction, verify dimensions of other construction by field measurements before fabrication. Coordinate fabrication schedule with construction progress to avoid delaying the Work.

B. Space Requirements: Verify space requirements and dimensions of items shown diagrammatically on Drawings.

C. Review of Contract Documents and Field Conditions: Immediately on discovery of the need for clarification of the Contract Documents caused by differing field conditions outside the control of Contractor, submit a request for information to Architect according to requirements in Section 013100 "Project Management and Coordination."

3.3 INSTALLATION

A. General: Locate the Work and components of the Work accurately, in correct alignment and elevation, as indicated.

1. Make vertical work plumb and make horizontal work level.

2. Where space is limited, install components to maximize space available for maintenance and ease of removal for replacement.
3. Conceal pipes, ducts, and wiring in finished areas unless otherwise indicated.

B. Comply with manufacturer's written instructions and recommendations for installing products in applications indicated.

C. Install products at the time and under conditions that will ensure the best possible results. Maintain conditions required for product performance until Substantial Completion.

D. Conduct construction operations so no part of the Work is subjected to damaging operations or loading in excess of that expected during normal conditions of occupancy.

E. Sequence the Work and allow adequate clearances to accommodate movement of construction items on site and placement in permanent locations.

F. Tools and Equipment: Do not use tools or equipment that produce harmful noise levels.

G. Templates: Obtain and distribute to the parties involved templates for work specified to be factory prepared and field installed. Check Shop Drawings of other work to confirm that adequate provisions are made for locating and installing products to comply with indicated requirements.

H. Joints: Make joints of uniform width. Where joint locations in exposed work are not indicated, arrange joints for the best visual effect. Fit exposed connections together to form hairline joints.

3.4 CUTTING AND PATCHING

A. Cutting and Patching, General: Employ skilled workers to perform cutting and patching. Proceed with cutting and patching at the earliest feasible time, and complete without delay.

1. Cut in-place construction to provide for installation of other components or performance of other construction, and subsequently patch as required to restore surfaces to their original condition.

B. Temporary Support: Provide temporary support of work to be cut.

C. Protection: Protect in-place construction during cutting and patching to prevent damage. Provide protection from adverse weather conditions for portions of Project that might be exposed during cutting and patching operations.

D. Existing Utility Services and Mechanical/Electrical Systems: Where existing services/systems are required to be removed, relocated, or abandoned, bypass such services/systems before cutting to minimize interruption to occupied areas.

E. Cutting: Cut in-place construction by sawing, drilling, breaking, chipping, grinding, and similar operations, including excavation, using methods least likely to damage elements retained or adjoining construction. If possible, review proposed procedures with original Installer; comply with original Installer's written recommendations.

1. In general, use hand or small power tools designed for sawing and grinding, not hammering and chopping. Cut holes and slots neatly to minimum size required, and with minimum disturbance of adjacent surfaces. Temporarily cover openings when not in use.
2. Finished Surfaces: Cut or drill from the exposed or finished side into concealed surfaces.
3. Concrete and Masonry: Cut using a cutting machine, such as an abrasive saw or a diamond-core drill.
4. Excavating and Backfilling: Comply with requirements in applicable Sections where required by cutting and patching operations.
5. Mechanical and Electrical Services: Cut off pipe or conduit in walls or partitions to be removed. Cap, valve, or plug and seal remaining portion of pipe or conduit to prevent entrance of moisture or other foreign matter after cutting.
6. Proceed with patching after construction operations requiring cutting are complete.

F. Patching: Patch construction by filling, repairing, refinishing, closing up, and similar operations following performance of other work. Patch with durable seams that are as invisible as practicable. Provide materials and comply with installation requirements specified in other Sections, where applicable.

1. Inspection: Where feasible, test and inspect patched areas after completion to demonstrate physical integrity of installation.
2. Exposed Finishes: Restore exposed finishes of patched areas and extend finish restoration into retained adjoining construction in a manner that will minimize evidence of patching and refinishing.

    a. Clean piping, conduit, and similar features before applying paint or other finishing materials.
    b. Restore damaged pipe covering to its original condition.

G. Cleaning: Clean areas and spaces where cutting and patching are performed. Remove paint, mortar, oils, putty, and similar materials from adjacent finished surfaces.

3.5 PROGRESS CLEANING

A. General: Maintain and clean Project site and work areas daily, including common areas. Coordinate progress cleaning for joint-use areas where more than one installer has worked. Enforce requirements strictly. Dispose of materials lawfully.

1. Comply with requirements in NFPA 241 for removal of combustible waste materials and debris.
2. Do not hold waste materials more than seven days during normal weather or three days if the temperature is expected to rise above 80 deg F.
3. Containerize hazardous and unsanitary waste materials separately from other waste. Mark containers appropriately and dispose of legally, according to regulations.

    a. Use containers intended for holding waste materials of type to be stored.

4. Coordinate progress cleaning for joint-use areas where Contractor and other contractors are working concurrently.

B. Site: Maintain Project site free of waste materials and debris.

C. Work Areas: Clean areas where work is in progress to the level of cleanliness necessary for proper execution of the Work.

1. Remove liquid spills promptly.
2. Where dust would impair proper execution of the Work, broom-clean or vacuum the entire work area, as appropriate.

D. Installed Work: Keep installed work clean. Clean installed surfaces according to written instructions of manufacturer or fabricator of product installed, using only cleaning materials specifically recommended. If specific cleaning materials are not recommended, use cleaning materials that are not hazardous to health or property and that will not damage exposed surfaces.

E. Concealed Spaces: Remove debris from concealed spaces before enclosing the space.

F. Exposed Surfaces in Finished Areas: Clean exposed surfaces and protect as necessary to ensure freedom from damage and deterioration at time of Substantial Completion.

G. Waste Disposal: Do not bury or burn waste materials on-site. Do not wash waste materials down sewers or into waterways. Comply with waste disposal requirements in Section 015000 "Temporary Facilities and Controls" and Section 017419 "Construction Waste Management and Disposal."

H. During handling and installation, clean and protect construction in progress and adjoining materials already in place. Apply protective covering where required to ensure protection from damage or deterioration at Substantial Completion.

I. Clean and provide maintenance on completed construction as frequently as necessary through the remainder of the construction period. Adjust and lubricate operable components to ensure operability without damaging effects.

J. Limiting Exposures: Supervise construction operations to assure that no part of the construction, completed or in progress, is subject to harmful, dangerous, damaging, or otherwise deleterious exposure during the construction period.

3.6 PROTECTION OF INSTALLED CONSTRUCTION

A. Provide final protection and maintain conditions that ensure installed Work is without damage or deterioration at time of Substantial Completion.

B. Comply with manufacturer's written instructions for temperature and relative humidity.

END OF SECTION 017300

SECTION 017419 - CONSTRUCTION WASTE MANAGEMENT AND DISPOSAL

PART 1 - GENERAL

1.1 RELATED DOCUMENTS

A. Drawings and general provisions of the Contract, including General and Supplementary Conditions and other Division 01 Specification Sections, apply to this Section.

1.2 SUMMARY

A. Section includes administrative and procedural requirements for the following:

1. Salvaging nonhazardous demolition and construction waste.
2. Recycling nonhazardous demolition and construction waste.
3. Disposing of nonhazardous demolition and construction waste.

1.3 DEFINITIONS

A. Construction Waste: Building and site improvement materials and other solid waste resulting from construction, remodeling, renovation, or repair operations. Construction waste includes packaging.

B. Demolition Waste: Building and site improvement materials resulting from demolition or selective demolition operations.

C. Disposal: Removal off-site of demolition and construction waste and subsequent sale, recycling, reuse, or deposit in landfill or incinerator acceptable to authorities having jurisdiction.

D. Recycle: Recovery of demolition or construction waste for subsequent processing in preparation for reuse.

E. Salvage: Recovery of demolition or construction waste and subsequent sale or reuse in another facility.

F. Salvage and Reuse: Recovery of demolition or construction waste and subsequent incorporation into the Work.

1.4 PERFORMANCE REQUIREMENTS

A. General: Practice efficient waste management in the use of materials in the course of the Work. Use all reasonable means to divert construction and demolition waste from landfills and incinerators. Facilitate recycling and salvage of materials.

1. Demolition Waste including, but not limited to:

    a. Asphalt paving.
    b. Concrete.
    c. Concrete reinforcing steel.
    d. Brick.
    e. Concrete masonry units.
    f. Structural and miscellaneous steel.
    g. Rough hardware.
    h. Roofing.
    i. Insulation.
    j. Windows.
    k. Glazing.
    l. Acoustical tile and panels.
    m. Equipment.
    n. Cabinets.
    o. Plumbing fixtures.
    p. Piping.
    q. Supports and hangers.
    r. Valves.
    s. Sprinklers.
    t. Mechanical equipment.
    u. Refrigerants.
    v. Electrical conduit.
    w. Copper wiring.
    x. Lighting fixtures.
    y. Lamps.
    z. Ballasts.
    aa. Electrical devices.
    bb. Switchgear and panelboards.
    cc. Transformers.

2. Construction Waste, including but not limited to:

    a. Masonry and CMU.
    b. Metals.
    c. Roofing.
    d. Insulation.
    e. Piping.
    f. Electrical conduit.
    g. Packaging: Regardless of salvage/recycle goal indicated in "General" Paragraph above, salvage or recycle 100 percent of the following uncontaminated packaging materials:

        1) Paper.
        2) Cardboard.
        3) Plastic sheet and film.
        4) Polystyrene packaging.
        5) Wood crates.
        6) Plastic pails.

1.5 QUALITY ASSURANCE

A. Regulatory Requirements: Comply with hauling and disposal regulations of authorities having jurisdiction.

PART 2 - PRODUCTS (Not Used)

PART 3 - EXECUTION

3.1 IMPLEMENTATION

A. General: Provide handling, containers, storage, signage, transportation, and other items as required during the entire duration of the Contract.

1. Comply with operation, termination, and removal requirements in Section 015000 "Temporary Facilities and Controls."

B. Training: Train workers, subcontractors, and suppliers on proper waste management procedures, as appropriate for the Work.

C. Site Access and Temporary Controls: Conduct waste management operations to ensure minimum interference with roads, streets, walks, walkways, and other adjacent occupied and used facilities.

1. Designate and label specific areas on Project site necessary for separating materials that are to be salvaged, recycled, reused, donated, and sold.
2. Comply with Section 015000 "Temporary Facilities and Controls" for controlling dust and dirt, environmental protection, and noise control.

3.2 SALVAGING DEMOLITION WASTE

A. Salvaged Items for Reuse in the Work: For any items salvaged onsite, reuse and handle as follows:

1. Clean salvaged items.
2. Pack or crate items after cleaning. Identify contents of containers with label indicating elements, date of removal, quantity, and location where removed.
3. Store items in a secure area until installation.
4. Protect items from damage during transport and storage.
5. Install salvaged items to comply with installation requirements for new materials and equipment. Provide connections, supports, and miscellaneous materials necessary to make items functional for use indicated.

B. Salvaged Items for Sale and Donation: Not permitted on Project site.

C. Salvaged Items for Owner's Use: For any item salvaged for Owner's use, handle as follows:

1. Clean salvaged items.
2. Pack or crate items after cleaning. Identify contents of containers with label indicating elements, date of removal, quantity, and location where removed.
3. Store items in a secure area until delivery to Owner.
4. Transport items to Owner's storage area designated by Owner.
5. Protect items from damage during transport and storage.

3.3 RECYCLING DEMOLITION AND CONSTRUCTION WASTE, GENERAL

A. General: Recycle paper, beverage containers, glass, metal, and plastic containers deemed acceptable for recycling by local recycling agency, used by on-site workers.

B. Preparation of Waste: Prepare and maintain recyclable waste materials according to recycling or reuse facility requirements. Maintain materials free of dirt, adhesives, solvents, petroleum contamination, and other substances deleterious to the recycling process.

C. Procedures: Separate recyclable waste from other waste materials, trash, and debris. Separate recyclable waste by type at Project site to the maximum extent practical according to approved construction waste management plan.

1. Provide appropriately marked containers or bins for controlling recyclable waste until removed from Project site. Include list of acceptable and unacceptable materials at each container and bin.

    a. Inspect containers and bins for contamination and remove contaminated materials if found.

2. Stockpile processed materials on-site without intermixing with other materials. Place, grade, and shape stockpiles to drain surface water. Cover to prevent windblown dust.
3. Stockpile materials away from construction area. Do not store within drip line of remaining trees.
4. Store components off the ground and protect from the weather.
5. Remove recyclable waste from Owner's property and transport to recycling receiver or processor.

3.4 RECYCLING DEMOLITION WASTE

A. Wood Materials: Sort and stack members according to size, type, and length. Separate lumber, engineered wood products, panel products, and treated wood materials.

B. Metals: Separate metals by type.

1. Structural Steel: Stack members according to size, type of member, and length.
2. Remove and dispose of bolts, nuts, washers, and other rough hardware.

C. Piping: Reduce piping to straight lengths and store by type and size. Separate supports, hangers, valves, sprinklers, and other components by type and size.

D. Conduit: Reduce conduit to straight lengths and store by type and size.

3.5 RECYCLING CONSTRUCTION WASTE

A. Packaging:

1. Cardboard and Boxes: Break down packaging into flat sheets. Bundle and store in a dry location.
2. Polystyrene Packaging: Separate and bag materials.
3. Pallets: As much as possible, require deliveries using pallets to remove pallets from Project site. For pallets that remain on-site, break down pallets into component wood pieces and comply with requirements for recycling wood.
4. Crates: Break down crates into component wood pieces and comply with requirements for recycling wood.

3.6 DISPOSAL OF WASTE

A. General: Except for items or materials to be salvaged, recycled, or otherwise reused, remove waste materials from Project site and legally dispose of them in a landfill or incinerator acceptable to authorities having jurisdiction.

1. Except as otherwise specified, do not allow waste materials that are to be disposed of accumulate on-site.
2. Remove and transport debris in a manner that will prevent spillage on adjacent surfaces and areas.

B. Burning: Do not burn waste materials.

C. Disposal: Remove waste materials from Owner's property and legally dispose of them.

END OF SECTION 017419

SECTION 017700 - CLOSEOUT PROCEDURES

PART 1 - GENERAL

1.1 RELATED DOCUMENTS

A. Drawings and general provisions of the Contract, including General and Supplementary Conditions and other Division 01 Specification Sections, apply to this Section.

1.2 SUMMARY

A. Section includes administrative and procedural requirements for contract closeout, including, but not limited to, the following:

1. Substantial Completion procedures.
2. Final completion procedures.
3. Warranties.
4. Final cleaning.
5. Repair of the Work.

1.3 ACTION SUBMITTALS

A. Contractor's List of Incomplete Items: Initial submittal at Substantial Completion.

B. Certified List of Incomplete Items: Final submittal at Final Completion.

1.4 CLOSEOUT SUBMITTALS

A. Certificates of Release: From authorities having jurisdiction.

B. Certificate of Insurance: For continuing coverage.

1.5 MAINTENANCE MATERIAL SUBMITTALS

A. Schedule of Maintenance Material Items: For maintenance material submittal items specified in other Sections.

1.6 SUBSTANTIAL COMPLETION PROCEDURES

A. Contractor's List of Incomplete Items: Prepare and submit a list of items to be completed and corrected (Contractor's punch list), indicating the value of each item on the list and reasons why the Work is incomplete.

B. Submittals Prior to Substantial Completion: Complete the following a minimum of 10 business days prior to requesting inspection for determining date of Substantial Completion. List items below that are incomplete at time of request.

1. Certificates of Release: Obtain and submit releases from authorities having jurisdiction permitting Owner unrestricted use of the Work and access to services and utilities. Include occupancy permits, operating certificates, and similar releases.
2. Submit closeout submittals specified in other Division 01 Sections, including project record documents, operation and maintenance manuals, final completion construction photographic documentation, damage or settlement surveys, property surveys, and similar final record information.
3. Submit closeout submittals specified in individual Sections, including specific warranties, workmanship bonds, maintenance service agreements, final certifications, and similar documents.
4. Submit maintenance material submittals specified in individual Sections, including tools, spare parts, extra materials, and similar items, and deliver to location designated by Architect. Label with manufacturer's name and model number where applicable.

    a. Schedule of Maintenance Material Items: Prepare and submit schedule of maintenance material submittal items, including name and quantity of each item and name and number of related Specification Section. Obtain Architect's signature for receipt of submittals.
5. Submit changeover information related to Owner's occupancy, use, operation, and maintenance.

C. Procedures Prior to Substantial Completion: Complete the following a minimum of 10 business days prior to requesting inspection for determining date of Substantial Completion. List items below that are incomplete at time of request.

1. Advise Owner of pending insurance changeover requirements.
2. Complete startup and testing of systems and equipment.
3. Perform preventive maintenance on equipment used prior to Substantial Completion.
4. Instruct Owner's personnel in operation, adjustment, and maintenance of products, equipment, and systems.
5. Advise Owner of changeover in heat and other utilities.
6. Participate with Owner in conducting inspection and walkthrough with local emergency responders.
7. Terminate and remove temporary facilities from Project site, along with mockups, construction tools, and similar elements.
8. Complete final cleaning requirements, including touchup painting.
9. Touch up and otherwise repair and restore marred exposed finishes to eliminate visual defects.

D. Inspection: Submit a written request for inspection to determine Substantial Completion a minimum of 10 business days prior to date the work will be completed and ready for final inspection and tests. On receipt of request, Architect will either proceed with inspection or notify Contractor of unfulfilled requirements. Architect will prepare the Certificate of Substantial Completion after inspection or will notify Contractor of items, either on Contractor's list or additional items identified by Architect, that must be completed or corrected before certificate will be issued.

1. Reinspection: Request reinspection when the Work identified in previous inspections as incomplete is completed or corrected.
2. Results of completed inspection will form the basis of requirements for final completion.

1.7 FINAL COMPLETION PROCEDURES

A. Submittals Prior to Final Completion: Before requesting final inspection for determining final completion, complete the following:

1. Submit a final Application for Payment according to Section 012900 "Payment Procedures."
2. Certified List of Incomplete Items: Submit certified copy of Architect's Substantial Completion inspection list of items to be completed or corrected (punch list), endorsed and dated by Architect. Certified copy of the list shall state that each item has been completed or otherwise resolved for acceptance.
3. Certificate of Insurance: Submit evidence of final, continuing insurance coverage complying with insurance requirements.
4. Submit pest-control final inspection report.

B. Inspection: Submit a written request for final inspection to determine acceptance a minimum of 10 business days prior to date the work will be completed and ready for final inspection and tests. On receipt of request, Architect will either proceed with inspection or notify Contractor of unfulfilled requirements. Architect will prepare a final Certificate for Payment after inspection or will notify Contractor of construction that must be completed or corrected before certificate will be issued.

1. Reinspection: Request reinspection when the Work identified in previous inspections as incomplete is completed or corrected.

1.8 LIST OF INCOMPLETE ITEMS (PUNCH LIST)

A. Organization of List: Contractor shall prepare Punch List to include the following: name and identification of each space and area affected by construction operations for incomplete items and items needing correction including, if necessary, areas disturbed by Contractor that are outside the limits of construction. Use Wendel standard punch list format or Procore format.

1. Organize list of spaces in sequential order, starting with exterior areas first and proceeding from lowest floor to highest floor.
2. Organize items applying to each space by major element, including categories for ceiling, individual walls, floors, equipment, and building systems.
3. Include the following information at the top of each page:

    a. Project name.
    b. Date.
    c. Name of Architect.
    d. Name of Contractor.
    e. Page number.

4. Submit list of incomplete items in the following format:

    a. PDF electronic file. Architect will return annotated file.

1.9 SUBMITTAL OF PROJECT WARRANTIES

A. Time of Submittal: Submit written warranties on request of Architect for designated portions of the Work where commencement of warranties other than date of Substantial Completion is indicated, or when delay in submittal of warranties might limit Owner's rights under warranty.

B. Partial Occupancy: Submit properly executed warranties within 15 business days of completion of designated portions of the Work that are completed and occupied or used by Owner during construction period by separate agreement with Contractor.

C. Organize warranty documents into an orderly sequence based on the table of contents of Project Manual.

1. Bind warranties and bonds in heavy-duty, three-ring, vinyl-covered, loose-leaf binders, thickness as necessary to accommodate contents, and sized to receive 8-1/2-by-11-inch paper.
2. Provide heavy paper dividers with plastic-covered tabs for each separate warranty. Mark tab to identify the product or installation. Provide a typed description of the product or installation, including the name of the product and the name, address, and telephone number of Installer.
3. Identify each binder on the front and spine with the typed or printed title "WARRANTIES," Project name, and name of Contractor.
4. Warranty Electronic File: Scan warranties and bonds and assemble complete warranty and bond submittal package into a single indexed electronic PDF file with links enabling navigation to each item. Provide bookmarked table of contents at beginning of document.

D. Provide additional copies of each warranty to include in operation and maintenance manuals.

PART 2 - PRODUCTS

2.1 MATERIALS

A. Cleaning Agents: Use cleaning materials and agents recommended by manufacturer or fabricator of the surface to be cleaned. Do not use cleaning agents that are potentially hazardous to health or property or that might damage finished surfaces.

PART 3 - EXECUTION

3.1 FINAL CLEANING

A. General: Perform final cleaning. Conduct cleaning and waste-removal operations to comply with local laws and ordinances and Federal and local environmental and antipollution regulations.

B. Cleaning: Employ experienced workers or professional cleaners for final cleaning. Clean each surface or unit to condition expected in an average commercial building cleaning and maintenance program. Comply with manufacturer's written instructions.

1. Complete the following cleaning operations before requesting inspection for certification of Substantial Completion for entire Project or for a designated portion of Project:

a. Clean Project site, yard, and grounds, in areas disturbed by construction activities, including landscape development areas, of rubbish, waste material, litter, and other foreign substances.
b. Sweep paved areas broom clean. Remove petrochemical spills, stains, and other foreign deposits.
c. Remove tools, construction equipment, machinery, and surplus material from Project site.
d. Clean exposed exterior and interior hard-surfaced finishes to a dirt-free condition, free of stains, films, and similar foreign substances.
e. Remove debris and surface dust from limited access spaces, including roofs, plenums, shafts, trenches, equipment vaults, manholes, attics, and similar spaces.
f. Sweep concrete floors broom clean in unoccupied spaces.
g. Remove labels that are not permanent.
h. Leave Project clean and ready for occupancy.

C. Construction Waste Disposal: Comply with waste disposal requirements in Section 015000 "Temporary Facilities and Controls" and Section 017419 "Construction Waste Management and Disposal."

D. Comply with safety standards for cleaning. Do not burn waste materials. Do not bury debris or excess materials on Owner’s property. Do not discharge volatile, harmful, or dangerous materials into drainage systems. Remove waste materials from Project site and dispose of lawfully.

3.2 REPAIR OF THE WORK

A. Complete repair and restoration operations before requesting inspection for determination of Substantial Completion.

B. Repair or remove and replace defective construction. Repairing includes replacing defective parts, refinishing damaged surfaces, touching up with matching materials, and properly adjusting operating equipment. Where damaged or worn items cannot be repaired or restored, provide replacements. Remove and replace operating components that cannot be repaired.

Restore damaged construction and permanent facilities used during construction to specified condition.

END OF SECTION 017700

THIS PAGE INTENTIONALLY LEFT BLANK

SECTION 017823 - OPERATION AND MAINTENANCE DATA

PART 1 - GENERAL

1.1 RELATED DOCUMENTS

A. Drawings and general provisions of the Contract, including General and Supplementary Conditions and other Division 01 Specification Sections, apply to this Section.

1.2 SUMMARY

A. Section includes administrative and procedural requirements for preparing operation and maintenance manuals, including the following:

1. Operation and maintenance documentation directory.
2. Emergency manuals.
3. Operation manuals for systems, subsystems, and equipment.
4. Product maintenance manuals.
5. Systems and equipment maintenance manuals.

1.3 DEFINITIONS

A. System: An organized collection of parts, equipment, or subsystems united by regular interaction.

B. Subsystem: A portion of a system with characteristics similar to a system.

1.4 CLOSEOUT SUBMITTALS

A. Manual Content: Operations and maintenance manual content is specified in individual Specification Sections to be reviewed at the time of Section submittals. Submit reviewed manual content formatted and organized as required by this Section.

1. Architect and Commissioning Authority will comment on whether content of operations and maintenance submittals are acceptable.
2. Where applicable, clarify and update reviewed manual content to correspond to revisions and field conditions.

B. Format: Submit operations and maintenance manuals in the following format:

1. PDF electronic file. Assemble each manual into a composite electronically indexed file. Submit on digital media acceptable to Architect.

a. Name each indexed document file in composite electronic index with applicable item name. Include a complete electronically linked operation and maintenance directory.
b. Enable inserted reviewer comments on draft submittals.

2. Three paper copies. Include a complete operation and maintenance directory. Enclose title pages and directories in clear plastic sleeves. Architect will return two copies.

C. Initial Manual Submittal: Submit draft copy of each manual at least 30 days before commencing demonstration and training. Architect and Commissioning Authority will comment on whether general scope and content of manual are acceptable.

D. Final Manual Submittal: Submit each manual in final form prior to requesting inspection for Substantial Completion and at least 15 days before commencing demonstration and training. Architect and Commissioning Authority will return copy with comments.

1. Correct or revise each manual to comply with Architect's and Commissioning Authority's comments. Submit copies of each corrected manual within 15 days of receipt of Architect's and Commissioning Authority's comments and prior to commencing demonstration and training.

PART 2 - PRODUCTS

2.1 OPERATION AND MAINTENANCE DOCUMENTATION DIRECTORY

A. Directory: Prepare a single, comprehensive directory of emergency, operation, and maintenance data and materials, listing items and their location to facilitate ready access to desired information. Include a section in the directory for each of the following:

1. List of documents.
2. List of systems.
3. List of equipment.
4. Table of contents.

B. List of Systems and Subsystems: List systems alphabetically. Include references to operation and maintenance manuals that contain information about each system.

C. List of Equipment: List equipment for each system, organized alphabetically by system. For pieces of equipment not part of system, list alphabetically in separate list.

D. Tables of Contents: Include a table of contents for each emergency, operation, and maintenance manual.

E. Identification: In the documentation directory and in each operation and maintenance manual, identify each system, subsystem, and piece of equipment with same designation used in the Contract Documents. If no designation exists, assign a designation according to ASHRAE Guideline 4, "Preparation of Operating and Maintenance Documentation for Building Systems."

2.2 REQUIREMENTS FOR EMERGENCY, OPERATION, AND MAINTENANCE MANUALS

A. Organization: Unless otherwise indicated, organize each manual into a separate section for each system and subsystem, and a separate section for each piece of equipment not part of a system. Each manual shall contain the following materials, in the order listed:

1. Title page.
2. Table of contents.
3. Manual contents.

B. Title Page: Include the following information:

1. Subject matter included in manual.
2. Name and address of Project.
3. Name and address of Owner.
4. Date of submittal.
5. Name and contact information for Contractor.
6. Name and contact information for Construction Manager.
7. Name and contact information for Architect.
8. Name and contact information for Commissioning Authority.
9. Names and contact information for major consultants to the Architect that designed the systems contained in the manuals.
10. Cross-reference to related systems in other operation and maintenance manuals.

C. Table of Contents: List each product included in manual, identified by product name, indexed to the content of the volume, and cross-referenced to Specification Section number in Project Manual.

1. If operation or maintenance documentation requires more than one volume to accommodate data, include comprehensive table of contents for all volumes in each volume of the set.

D. Manual Contents: Organize into sets of manageable size. Arrange contents alphabetically by system, subsystem, and equipment. If possible, assemble instructions for subsystems, equipment, and components of one system into a single binder.

E. Manuals, Electronic Files: Submit manuals in the form of a multiple file composite electronic PDF file for each manual type required.

1. Electronic Files: Use electronic files prepared by manufacturer where available. Where scanning of paper documents is required, configure scanned file for minimum readable file size.
2. File Names and Bookmarks: Enable bookmarking of individual documents based on file names. Name document files to correspond to system, subsystem, and equipment names used in manual directory and table of contents. Group documents for each system and subsystem into individual composite bookmarked files, then create composite manual, so that resulting bookmarks reflect the system, subsystem, and equipment names in a readily navigated file tree. Configure electronic manual to display bookmark panel on opening file.

F. Manuals, Paper Copy: Submit manuals in the form of hard copy, bound and labeled volumes.

1. Binders: Heavy-duty, three-ring, vinyl-covered, loose-leaf binders, in thickness necessary to accommodate contents, sized to hold 8-1/2-by-11-inch paper; with clear plastic sleeve on spine to hold label describing contents and with pockets inside covers to hold folded oversize sheets.

    a. If two or more binders are necessary to accommodate data of a system, organize data in each binder into groupings by subsystem and related components. Cross-reference other binders if necessary to provide essential information for proper operation or maintenance of equipment or system.
    b. Identify each binder on front and spine, with printed title "OPERATION AND MAINTENANCE MANUAL," Project title or name, and subject matter of contents, and indicate Specification Section number on bottom of spine. Indicate volume number for multiple-volume sets.

2. Dividers: Heavy-paper dividers with plastic-covered tabs for each section of the manual. Mark each tab to indicate contents. Include typed list of products and major components of equipment included in the section on each divider, cross-referenced to Specification Section number and title of Project Manual.
3. Protective Plastic Sleeves: Transparent plastic sleeves designed to enclose diagnostic software storage media for computerized electronic equipment.
4. Supplementary Text: Prepared on 8-1/2-by-11-inch white bond paper.
5. Drawings: Attach reinforced, punched binder tabs on drawings and bind with text.

    a. If oversize drawings are necessary, fold drawings to same size as text pages and use as foldouts.
    b. If drawings are too large to be used as foldouts, fold and place drawings in labeled envelopes and bind envelopes in rear of manual. At appropriate locations in manual, insert typewritten pages indicating drawing titles, descriptions of contents, and drawing locations.

2.3 EMERGENCY MANUALS

A. Content: Organize manual into a separate section for each of the following:

1. Type of emergency.
2. Emergency instructions.
3. Emergency procedures.

B. Type of Emergency: Where applicable for each type of emergency indicated below, include instructions and procedures for each system, subsystem, piece of equipment, and component:

1. Fire.
2. Flood.
3. Gas leak.
4. Water leak.
5. Power failure.
6. Water outage.

7. System, subsystem, or equipment failure.
8. Chemical release or spill.

C. Emergency Instructions: Describe and explain warnings, trouble indications, error messages, and similar codes and signals. Include responsibilities of Owner's operating personnel for notification of Installer, supplier, and manufacturer to maintain warranties.

D. Emergency Procedures: Include the following, as applicable:

1. Instructions on stopping.
2. Shutdown instructions for each type of emergency.
3. Operating instructions for conditions outside normal operating limits.
4. Required sequences for electric or electronic systems.
5. Special operating instructions and procedures.

2.4 OPERATION MANUALS

A. Content: In addition to requirements in this Section, include operation data required in individual Specification Sections and the following information:

1. System, subsystem, and equipment descriptions. Use designations for systems and equipment indicated on Contract Documents.
2. Performance and design criteria if Contractor has delegated design responsibility.
3. Operating standards.
4. Operating procedures.
5. Operating logs.
6. Wiring diagrams.
7. Control diagrams.
8. Piped system diagrams.
9. Precautions against improper use.
10. License requirements including inspection and renewal dates.

B. Descriptions: Include the following:

1. Product name and model number. Use designations for products indicated on Contract Documents.
2. Manufacturer's name.
3. Equipment identification with serial number of each component.
4. Equipment function.
5. Operating characteristics.
6. Limiting conditions.
7. Performance curves.
8. Engineering data and tests.
9. Complete nomenclature and number of replacement parts.

C. Operating Procedures: Include the following, as applicable:

1. Startup procedures.
2. Equipment or system break-in procedures.

3. Routine and normal operating instructions.
4. Regulation and control procedures.
5. Instructions on stopping.
6. Normal shutdown instructions.
7. Seasonal and weekend operating instructions.
8. Required sequences for electric or electronic systems.
9. Special operating instructions and procedures.

D. Systems and Equipment Controls: Describe the sequence of operation, and diagram controls as installed.

E. Piped Systems: Diagram piping as installed, and identify color-coding where required for identification.

2.5 PRODUCT MAINTENANCE MANUALS

A. Content: Organize manual into a separate section for each product, material, and finish. Include source information, product information, maintenance procedures, repair materials and sources, and warranties and bonds, as described below.

B. Source Information: List each product included in manual, identified by product name and arranged to match manual's table of contents. For each product, list name, address, and telephone number of Installer or supplier and maintenance service agent, and cross-reference Specification Section number and title in Project Manual and drawing or schedule designation or identifier where applicable.

C. Product Information: Include the following, as applicable:

1. Product name and model number.
2. Manufacturer's name.
3. Color, pattern, and texture.
4. Material and chemical composition.
5. Reordering information for specially manufactured products.

D. Maintenance Procedures: Include manufacturer's written recommendations and the following:

1. Inspection procedures.
2. Types of cleaning agents to be used and methods of cleaning.
3. List of cleaning agents and methods of cleaning detrimental to product.
4. Schedule for routine cleaning and maintenance.
5. Repair instructions.

E. Repair Materials and Sources: Include lists of materials and local sources of materials and related services.

F. Warranties and Bonds: Include copies of warranties and bonds and lists of circumstances and conditions that would affect validity of warranties or bonds.

1. Include procedures to follow and required notifications for warranty claims.

2.6 SYSTEMS AND EQUIPMENT MAINTENANCE MANUALS

A. Content: For each system, subsystem, and piece of equipment not part of a system, include source information, manufacturers' maintenance documentation, maintenance procedures, maintenance and service schedules, spare parts list and source information, maintenance service contracts, and warranty and bond information, as described below.

B. Source Information: List each system, subsystem, and piece of equipment included in manual, identified by product name and arranged to match manual's table of contents. For each product, list name, address, and telephone number of Installer or supplier and maintenance service agent, and cross-reference Specification Section number and title in Project Manual and drawing or schedule designation or identifier where applicable.

C. Manufacturers' Maintenance Documentation: Manufacturers' maintenance documentation including the following information for each component part or piece of equipment:

1. Standard maintenance instructions and bulletins.
2. Drawings, diagrams, and instructions required for maintenance, including disassembly and component removal, replacement, and assembly.
3. Identification and nomenclature of parts and components.
4. List of items recommended to be stocked as spare parts.

D. Maintenance Procedures: Include the following information and items that detail essential maintenance procedures:

1. Test and inspection instructions.
2. Troubleshooting guide.
3. Precautions against improper maintenance.
4. Disassembly; component removal, repair, and replacement; and reassembly instructions.
5. Aligning, adjusting, and checking instructions.
6. Demonstration and training video recording, if available.

E. Maintenance and Service Schedules: Include service and lubrication requirements, list of required lubricants for equipment, and separate schedules for preventive and routine maintenance and service with standard time allotment.

1. Scheduled Maintenance and Service: Tabulate actions for daily, weekly, monthly, quarterly, semiannual, and annual frequencies.
2. Maintenance and Service Record: Include manufacturers' forms for recording maintenance.

F. Spare Parts List and Source Information: Include lists of replacement and repair parts, with parts identified and cross-referenced to manufacturers' maintenance documentation and local sources of maintenance materials and related services.

G. Maintenance Service Contracts: Include copies of maintenance agreements with name and telephone number of service agent.

H. Warranties and Bonds: Include copies of warranties and bonds and lists of circumstances and conditions that would affect validity of warranties or bonds.

1. Include procedures to follow and required notifications for warranty claims.

PART 3 - EXECUTION

3.1 MANUAL PREPARATION

A. Operation and Maintenance Documentation Directory: Prepare a separate manual that provides an organized reference to emergency, operation, and maintenance manuals.

B. Emergency Manual: Assemble a complete set of emergency information indicating procedures for use by emergency personnel and by Owner's operating personnel for types of emergencies indicated.

C. Product Maintenance Manual: Assemble a complete set of maintenance data indicating care and maintenance of each product, material, and finish incorporated into the Work.

D. Operation and Maintenance Manuals: Assemble a complete set of operation and maintenance data indicating operation and maintenance of each system, subsystem, and piece of equipment not part of a system.

1. Engage a factory-authorized service representative to assemble and prepare information for each system, subsystem, and piece of equipment not part of a system.
2. Prepare a separate manual for each system and subsystem, in the form of an instructional manual for use by Owner's operating personnel.

E. Manufacturers' Data: Where manuals contain manufacturers' standard printed data, include only sheets pertinent to product or component installed. Mark each sheet to identify each product or component incorporated into the Work. If data include more than one item in a tabular format, identify each item using appropriate references from the Contract Documents. Identify data applicable to the Work and delete references to information not applicable.

1. Prepare supplementary text if manufacturers' standard printed data are not available and where the information is necessary for proper operation and maintenance of equipment or systems.

F. Drawings: Prepare drawings supplementing manufacturers' printed data to illustrate the relationship of component parts of equipment and systems and to illustrate control sequence and flow diagrams. Coordinate these drawings with information contained in record Drawings to ensure correct illustration of completed installation.

1. Do not use original project record documents as part of operation and maintenance manuals.
2. Comply with requirements of newly prepared record Drawings in Section 017839 "Project Record Documents."

G. Comply with Section 017700 "Closeout Procedures" for schedule for submitting operation and maintenance documentation.

END OF SECTION 017823

SECTION 017839 - PROJECT RECORD DOCUMENTS

PART 1 - GENERAL

1.1 RELATED DOCUMENTS

A. Drawings and general provisions of the Contract, including General and Supplementary Conditions and other Division 01 Specification Sections, apply to this Section.

1.2 SUMMARY

A. Section includes administrative and procedural requirements for project record documents, including the following:

1. Record Drawings.
2. Record Specifications.
3. Record Product Data.
4. Miscellaneous record submittals.

1.3 CLOSEOUT SUBMITTALS

A. Record Drawings: Comply with the following:

1. Number of Copies: Submit copies of record Drawings as follows:

a. Initial Submittal:

1) Submit PDF electronic files of scanned record prints and one of file prints.
2) Architect will indicate whether general scope of changes, additional information recorded, and quality of drafting are acceptable.

b. Final Submittal:

1) Submit PDF electronic files of scanned record prints and three set(s) of prints.
2) Print each drawing, whether or not changes and additional information were recorded.

B. Miscellaneous Record Submittals: See other Specification Sections for miscellaneous record-keeping requirements and submittals in connection with various construction activities. Submit one paper copy and one annotated PDF electronic file and directories of each submittal.

PART 2 - PRODUCTS

2.1 RECORD DRAWINGS

A. Record Prints: Maintain one set of marked-up paper copies of the Contract Drawings and Shop Drawings, incorporating new and revised drawings as modifications are issued.

1. Preparation: Mark record prints to show the actual installation where installation varies from that shown originally. Require individual or entity who obtained record data, whether individual or entity is Installer, subcontractor, or similar entity, to provide information for preparation of corresponding marked-up record prints.

    a. Clearly record and identify information regarding concealed elements that would be difficult to identify or measure or record later.
    b. Accurately record information in an acceptable drawing technique.
    c. Record data immediately after revealing or obtaining it.
    d. Record and check the markup before enclosing concealed installations.
    e. Cross-reference record prints to corresponding archive photographic documentation.

2. Maintain on Project site at all times, in an approved location, and in a clean, dry and legible condition, one set of Project Drawings and one set of Submittals. These documents shall be used to record as-built conditions on a day-to-day basis, and shall be kept current and available for inspection by the Architect or Owner’s Project representative during working hours.
3. Content: Types of items requiring marking include, but are not limited to, the following:

    a. Dimensional changes to Drawings.
    b. Concealed insulation types, thicknesses and R-Values.
    c. Locations of discontinuous insulation, if any.
    d. Revisions to details shown on Drawings.
    e. Depths of foundations below first floor.
    f. Locations and depths of underground utilities.
    g. Revisions to routing of piping and conduits.
    h. Revisions to electrical circuitry.
    i. Actual equipment locations.
    j. Duct size and routing.
    k. Locations of concealed internal utilities.
    l. Changes made by Change Order or Change Directive.
    m. Changes made following Architect's written orders.
    n. Details not on the original Contract Drawings.
    o. Field records for variable and concealed conditions.
    p. Actual installed information about Work that is shown only schematically.

4. Mark the Contract Drawings and Shop Drawings completely and accurately. Use personnel proficient at recording graphic information in production of marked-up record prints.
5. Mark record sets with erasable, red-colored pencil. Use other colors to distinguish between changes for different categories of the Work at same location.

6. Mark important additional information that was either shown schematically or omitted from original Drawings.
7. Note Construction Change Directive numbers, alternate numbers, Change Order numbers, and similar identification, where applicable.

B. Format: Identify and date each record Drawing; include the designation "PROJECT RECORD DRAWING" in a prominent location.

1. Record Prints: Organize record prints and newly prepared record Drawings into manageable sets. Bind each set with durable paper cover sheets. Include identification on cover sheets.
2. Format: Annotated PDF electronic file.
3. Record Digital Data Files: Organize digital data information into separate electronic files that correspond to each sheet of the Contract Drawings. Name each file with the sheet identification. Include identification in each digital data file.
4. Identification: As follows:

a. Project name.
b. Date.
c. Designation "PROJECT RECORD DRAWINGS."
d. Name of Architect.
e. Name of Contractor.

2.2 MISCELLANEOUS RECORD SUBMITTALS

A. Assemble miscellaneous records required by other Specification Sections for miscellaneous record keeping and submittal in connection with actual performance of the Work. Bind or file miscellaneous records and identify each, ready for continued use and reference.

B. Format: Submit miscellaneous record submittals as scanned PDF electronic file(s) of marked-up miscellaneous record submittals.

1. Include miscellaneous record submittals directory organized by Specification Section number and title, electronically linked to each item of miscellaneous record submittals.

PART 3 - EXECUTION

3.1 RECORDING AND MAINTENANCE

A. Recording: Maintain one copy of each submittal during the construction period for project record document purposes. Post changes and revisions to project record documents as they occur; do not wait until end of Project.

B. Maintenance of Record Documents and Samples: Store record documents and Samples in the field office apart from the Contract Documents used for construction. Do not use project record documents for construction purposes. Maintain record documents in good order and in a clean,

dry, legible condition, protected from deterioration and loss. Provide access to project record documents for Architect's reference during normal working hours.

END OF SECTION 017839

DIVISION 02

SECTION 024100 - DEMOLITION

PART 1 - GENERAL

1.01 SECTION INCLUDES

A. Selective demolition of building elements for alteration purposes.

1.02 RELATED REQUIREMENTS

A. Section 014533- Code-Required Special Inspections and Procedures

B. Section 015000- Temporary Facilities and Controls

PART 2 - EXECUTION

2.01 SCOPE

A. See drawings for demolition scope.

2.02 GENERAL PROCEDURES AND PROJECT CONDITIONS

A. Comply with applicable codes and regulations for demolition operations and safety of adjacent structures and the public.

1. Obtain required permits, including those required by the University of Massachusetts, Amherst campus.
2. Provide, erect, and maintain temporary barriers and security devices.
3. Conduct operations to minimize effects on and interference with adjacent structures and occupants.
4. Conduct operations to minimize obstruction of public and private entrances and exits; do not obstruct required exits at any time; protect persons using entrances and exits from removal operations.

B. Do not begin removal until receipt of notification to proceed from Owner.

C. Protect existing structures and other elements that are not to be removed.

1. Install temporary partitions and other protection as required in specification 015100 Temporary Facilities and Controls prior to beginning demolition.
2. Provide bracing and shoring.
3. Prevent movement or settlement of adjacent structures.
4. Stop work immediately if adjacent structures appear to be in danger.

2.03 SELECTIVE DEMOLITION FOR ALTERATIONS

A. Drawings showing existing construction and utilities are based on casual field observation and existing record documents only.

1. Verify that construction and utility arrangements are as indicated.
2. Report discrepancies to engineer before disturbing existing installation.
3. Beginning of demolition work constitutes acceptance of existing conditions that would be apparent upon examination prior to starting demolition.

B. Remove existing work as indicated and as required to accomplish new work.

1. Remove items indicated on drawings.

C. Services: Remove existing systems and equipment as indicated.

1. Maintain existing active systems that are to remain in operation; maintain access to equipment and operational components.
2. Where existing active systems serve occupied facilities but are to be replaced with new services, maintain existing systems in service until new systems are complete and ready for service.
3. Verify that abandoned services serve only abandoned facilities before removal.
4. Remove abandoned pipe, ducts, conduits, and equipment, including those above accessible ceilings; remove back to source of supply where possible, otherwise cap stub and tag with identification.

D. Protect existing work to remain.

1. Protect existing vegetation, equipment, structures, utilities, and other improvements at Project site and on adjacent properties, except those indicated to be removed or altered. Repair damage to existing facilities.
2. Prevent movement of structure; provide shoring and bracing if necessary.
3. Perform cutting to accomplish removals neatly and as specified for cutting new work.
4. Repair adjacent construction and finishes damaged during removal work.
5. Patch as specified for patching new work.

2.04 DEBRIS AND WASTE REMOVAL

A. Remove debris, junk, and trash from site.

B. Leave site in clean condition, ready for subsequent work.

C. Clean up spillage and wind-blown debris from public and private lands.

END OF SECTION 024100

DIVISION 03

SECTION 033000 - CAST-IN-PLACE CONCRETE

PART 1 GENERAL

1.1 SECTION INCLUDES

A. Concrete formwork.

B. Floors and slabs on grade.

C. Concrete foundation walls.

D. Concrete reinforcement.

E. Joint devices associated with concrete work.

F. Miscellaneous concrete elements, including equipment pads.

G. Concrete curing.

1.2 RELATED REQUIREMENTS

A. Section 014533 - Code-Required Special Inspections and Procedures

B. Section 033511 - Concrete Floor Finishes: Densifiers, hardeners, applied coatings, and polishing.

1.3 REFERENCE STANDARDS

A. ACI CODE-318 - Building Code Requirements for Structural Concrete and Commentary.

B. ACI PRC-211.1 - Selecting Proportions for Normal-Density and High Density-Concrete - Guide.

C. ACI PRC-302.1 - Guide to Concrete Floor and Slab Construction.

D. ACI PRC-304 - Guide for Measuring, Mixing, Transporting, and Placing Concrete.

E. ACI PRC-305 - Guide to Hot Weather Concreting.

F. ACI PRC-306 - Guide to Cold Weather Concreting.

G. ACI PRC-308 - Guide to External Curing of Concrete.

H. ACI PRC-347 - Guide to Formwork for Concrete.

I. ACI SPEC-117 - Specification for Tolerances for Concrete Construction and Materials.

J. ACI SPEC-301 - Specifications for Concrete Construction.

K. ASTM A194/A194M - Standard Specification for Carbon Steel, Alloy Steel, and Stainless Steel Nuts for Bolts for High Pressure or High Temperature Service, or Both.

L. ASTM A615/A615M - Standard Specification for Deformed and Plain Carbon-Steel Bars for Concrete Reinforcement.

M. ASTM A1064/A1064M - Standard Specification for Carbon-Steel Wire and Welded Wire Reinforcement, Plain and Deformed, for Concrete.

N. ASTM C31/C31M - Standard Practice for Making and Curing Concrete Test Specimens in the Field.

O. ASTM C33/C33M - Standard Specification for Concrete Aggregates.

P. ASTM C39/C39M - Standard Test Method for Compressive Strength of Cylindrical Concrete Specimens.

Q. ASTM C94/C94M - Standard Specification for Ready-Mixed Concrete.

R. ASTM C109/C109M - Standard Test Method for Compressive Strength of Hydraulic Cement Mortars (Using 50 mm [2 in.] Cube Specimens).

S. ASTM C143/C143M - Standard Test Method for Slump of Hydraulic-Cement Concrete.

T. ASTM C150/C150M - Standard Specification for Portland Cement.

U. ASTM C171 - Standard Specification for Sheet Materials for Curing Concrete.

V. ASTM C173/C173M - Standard Test Method for Air Content of Freshly Mixed Concrete by the Volumetric Method.

W. ASTM C260/C260M - Standard Specification for Air-Entraining Admixtures for Concrete.

X. ASTM C348 - Standard Test Method for Flexural Strength of Hydraulic-Cement Mortars.

Y. ASTM C348 - Standard Test Method for Flexural Strength of Hydraulic-Cement Mortars.

Z. ASTM C472 - Standard Test Methods for Physical Testing of Gypsum, Gypsum Plasters, and Gypsum Concrete.

AA. ASTM C472 - Standard Test Methods for Physical Testing of Gypsum, Gypsum Plasters, and Gypsum Concrete.

BB. ASTM C494/C494M - Standard Specification for Chemical Admixtures for Concrete.

CC. ASTM C595/C595M - Standard Specification for Blended Hydraulic Cements.

DD. ASTM C595/C595M - Standard Specification for Blended Hydraulic Cements.

EE. ASTM C685/C685M - Standard Specification for Concrete Made by Volumetric Batching and Continuous Mixing.

FF. ASTM C881/C881M - Standard Specification for Epoxy-Resin-Base Bonding Systems for Concrete.

GG. ASTM C1059/C1059M - Standard Specification for Latex Agents for Bonding Fresh to Hardened Concrete.

HH. ASTM C1107/C1107M - Standard Specification for Packaged Dry, Hydraulic-Cement Grout (Nonshrink).

II. ASTM C1202 - Standard Test Method for Electrical Indication of Concrete's Ability to Resist Chloride Ion Penetration.

JJ. ASTM C1602/C1602M - Standard Specification for Mixing Water Used in the Production of Hydraulic Cement Concrete.

KK. ASTM D8139 - Standard Specification for Semi-Rigid, Closed-Cell Polypropylene Foam, Preformed Expansion Joint Fillers for Concrete Paving and Structural Construction.

LL. ASTM D8139 - Standard Specification for Semi-Rigid, Closed-Cell Polypropylene Foam, Preformed Expansion Joint Fillers for Concrete Paving and Structural Construction.

MM. ASTM E96/E96M - Standard Test Methods for Gravimetric Determination of Water Vapor Transmission Rate of Materials.

NN. ASTM E96/E96M - Standard Test Methods for Gravimetric Determination of Water Vapor Transmission Rate of Materials.

OO. ASTM D1751 - Standard Specification for Preformed Expansion Joint Filler for Concrete Paving and Structural Construction (Nonextruding and Resilient Asphalt Types).

PP. ASTM E1643 - Standard Practice for Selection, Design, Installation, and Inspection of Water Vapor Retarders Used in Contact with Earth or Granular Fill Under Concrete Slabs.

QQ. ASTM E1745 - Standard Specification for Plastic Water Vapor Retarders Used in Contact with Soil or Granular Fill under Concrete Slabs.

RR. ASTM F593 - Standard Specification for Stainless Steel Bolts, Hex Cap Screws, and Studs.

SS. ASTM F1554 - Standard Specification for Anchor Bolts, Steel, 36, 55, and 105-ksi Yield Strength.

TT. ICC-ES AC308 - Acceptance Criteria for Post-Installed Adhesive Anchors in Concrete Elements.

UU. ICRI 310.2R - Selecting and Specifying Concrete Surface Preparation for Sealers, Coatings, Polymer Overlays, and Concrete Repair.

VV. NSF 61 - Drinking Water System Components - Health Effects.

WW. NSF 372 - Drinking Water System Components - Lead Content.

1.4 SUBMITTALS

A. See Section 013000 - Administrative Requirements for submittal procedures.

B. Product Data: Submit manufacturers' data on manufactured products showing compliance with specified requirements and installation instructions for each product indicated in the specifation and drawings.

C. Mix Design: Submit proposed concrete mix design.
   1. Indicate proposed mix design complies with requirements of ACI SPEC-301, Section 4 - Concrete Mixtures.
   2. Indicate proposed mix design complies with admixture manufacturer's written recommendations.

D. Shop Drawings: Comply with requirements of ACI SP-66. Placing drawings that detail fabrication, bending, and placement. Include bar sizes, lengths, material, grade, bar schedules, stirrup spacing, bent bar diagrams, bar arrangement, splices and laps, mechanical connections, tie spacing, hoop spacing, and supports for concrete reinforcement.

E. Samples: Submit samples of underslab vapor retarder to be used.

F. Test Reports: Submit report for each test or series of tests specified.

G. Minutes of preinstallation conference.

1.5 QUALITY ASSURANCE

A. Perform work of this section in accordance with ACI SPEC-301 and ACI CODE-318.

B. Follow recommendations of ACI PRC-305 when concreting during hot weather.
   1. Hot-weather includes any combination of the following conditions: high ambient temperature, high concrete temperature, low relative humidity, high wind speed and solar radiation.
   2. Submit a hot-weather concrete plan complying with ACI PRC-305 for review and record. Plan shall be submitted at least 2-weeks prior to hot-weather concrete placement. The document shall identify the cold-weather practices to be implemented, duration of weather protection, and additional testing requirements. Examples of hot-weather practices include:
      a. Adjusting the concrete mixture composition and propotions.
      b. Chilled water or ice as part of mixing water.
      c. Use of mist fogging.
      d. Shade canopies, windbreaks, or temporary enclosures.
      e. Water reducing and/or set retarding admixtures

C. Follow recommendations of ACI PRC-306 when concreting during cold weather.
   1. Cold-weather is defined as a period when for more than 3 consecutive days the average daily temperature is less than 40 deg F and the aire temperature is not more than 50 deg F for more than one-half of any 24-hr period. These conditions warrant special percautions when placing, finishing, curing and protecting concrete against the effects of cold weather.
   2. Submit a cold-weather concrete plan complying with ACI PRC-306 for review and record. Plan shall be submitted at least 2-weeks prior to cold-weather concrete placement. The document shall identify the cold-weather practices to be implemented, duration of

weather protection, and additional testing requirements. Examples of cold-weather practices include:
a. Heating materials.
b. Heating subgrade, formwork, and reinforcing bars (placing on frozen sugrade/materials is prohibited.
c. Use of insulating blankets or electic heating blankets.
d. Heated enclosures.
e. Accelerating admixtures

D. Installer Qualifications:
1. A qualified installer who employs on Project personnel qualified as ACI-certified Flatwork Technician and Finisher and a supervisor who is an ACI-certified Concrete Flatwork Technician.
2. An experienced installer who has completed concrete Work similar in material, design, and extent to that indicated for this Project and whose work has resulted in construction with a record of successful in-service performance

E. Manufacturer Qualifications: A firm experienced in manufacturing ready-mixed concrete products and that complies with ASTM C 94 requirements for production facilities and equipment.
1. Manufacturer certified according to NRMCA's "Certification of Ready Mixed Concrete Production Facilities."

F. Source Limitations: Obtain each type or class of cementitious material of the same brand from the same manufacturer's plant and obtain aggregate from one source. Obtain admixtures through one source from a single manufacturer, unless supplier certifies compatibility between admixtures from multiple manufacturers.

G. Concrete Testing Service: Engage the qualified independent testing agency, hired by the owner, to perform material evaluation tests and to design concrete mixtures.

H. Preinstallation Conference: Conduct conference at Project site to comply with requirements in Division 01 Section "Project Management and Coordination." The Contractor shall record, type, and distribute minutes of the meeting to all parties concerned within 5 days.
1. Before submitting design mixtures, review concrete design mixture and examine procedures for ensuring quality of concrete materials. Require representatives of each entity directly concerned with cast-in-place concrete to attend, including the following:
a. Contractor's superintendent.
b. Special Inspector.
c. Independent testing agency responsible for concrete design mixes.
d. Independent testing agency responsible for field quality control.
e. Ready-mix concrete manufacturer.
f. Concrete subcontractor.
g. Concrete pump supplier (if pumps are to be used).
h. Architect.
2. Review special inspection and testing and inspecting agency procedures for field quality control; concrete finishes and finishing; cold- and hot-weather concreting procedures; curing procedures; construction, contraction and isolation joints; joint-filler strips and semi-rigid joint fillers; forms and form removal limitations; shoring and reshoring

procedures; vapor-retarder installation; anchor rod and anchorage device installation tolerances; steel reinforcement installation; floor and slab flatness and levelness measurement; concrete repair procedures; and concrete protection.

1.6 WARRANTY

A. See Section 017800 - Closeout Submittals for additional warranty requirements.

1.7 DELIVERY, STORAGE, AND HANDLING

A. Steel Reinforcement: Deliver, store, and handle steel reinforcement to prevent bending and damage.

PART 2 PRODUCTS

2.1 FORMWORK

A. Formwork Design and Construction: Comply with guidelines of ACI PRC-347 to provide formwork that will produce concrete complying with tolerances of ACI SPEC-117.

B. Form Materials: Contractor's choice of standard products with sufficient strength to withstand hydrostatic head without distortion in excess of permitted tolerances.
   1. Form Facing for Exposed Finish Concrete: Contractor's choice of materials that will provide smooth, stain-free final appearance.
   2. Form Coating: Release agent that will not adversely affect concrete or interfere with application of coatings.
   3. Form Ties: Cone snap type that will leave no metal within 1-1/2 inches of concrete surface.

C. Void Forms: Biodegradable paper surface, treated for moisture resistance, structurally sufficient to support weight of plastic concrete and other superimposed loads.

D. Chamfer Strips: Wood, metal, PVC, or rubber strips, 3/4 by 3/4 inch, minimum.

2.2 REINFORCEMENT MATERIALS

A. Reinforcing Steel: ASTM A615/A615M, Grade 60 (60,000 psi).
   1. Type: Deformed billet-steel bars.
   2. Finish: Unfinished, unless otherwise indicated.

B. Steel Welded Wire Reinforcement (WWR): Plain type, ASTM A1064/A1064M.
   1. Form: Flat Sheets.
   2. WWR Style: As indicated on drawings.

C. Reinforcement Accessories:
   1. Tie Wire: Annealed, minimum 16 gauge, 0.0508 inch.
   2. Chairs, Bolsters, Bar Supports, Spacers: Sized and shaped for adequate support of reinforcement during concrete placement.

3. Provide stainless steel, galvanized, plastic, or plastic coated steel components for placement within 1-1/2 inches of weathering surfaces.

2.3 CONCRETE MATERIALS

A. Cement: ASTM C150/C150M, Type I - Normal Portland type. , Color: Gray
   1. Acquire cement for entire project from same source.
   2. Supplemental cementitious materials (SCMs) added to the mix are not acceptable.

B. Blended Hydraulic Cement: ASTM C595/C595M, Type IL(10).
   1. Additional supplemental cementitious materials (SCMs) added to the mix in conjunction with blended hydraulic cements are not acceptable.

C. Fine and Coarse Aggregates: ASTM C33/C33M.
   1. Acquire aggregates for entire project from same source.
   2. Class 3S coarse aggregate or better, graded.
   3. Fine Aggregate: Free of materials with deleterious reactivity to alkali in cement.

D. Water: ASTM C1602/C1602M; clean, potable, and not detrimental to concrete.

2.4 ADMIXTURES

A. Do not use chemicals that will result in soluble chloride ions in excess of 0.1 percent by weight of cement.

B. Air Entrainment Admixture: ASTM C260/C260M.

C. High Range Water Reducing and Retarding Admixture: ASTM C494/C494M Type G.

D. High Range Water Reducing Admixture: ASTM C494/C494M Type F.

E. Water Reducing and Accelerating Admixture: ASTM C494/C494M Type E.

F. Water Reducing and Retarding Admixture: ASTM C494/C494M Type D.

G. Accelerating Admixture: ASTM C494/C494M Type C.

H. Retarding Admixture: ASTM C494/C494M Type B.

I. Water Reducing Admixture: ASTM C494/C494M Type A.

J. Corrosion Inhibiting Admixture:
   1. ASTM C494/C494M, Type C.

K. Waterproofing Admixture: Admixture formulated to reduce permeability to liquid water, with no adverse effect on concrete properties.
   1. Potable Water Contact Approval: National Science Foundation (NSF) certification for use on structures holding potable water, based on testing in accordance with NSF 61 and NSF 372
   2. Products:
      a. Xypex Chemical Corporation; Xypex Admix C-500/C-500NF: www.xypex.com/#sle.

2.5 ACCESSORY MATERIALS

A. Underslab Vapor Retarder:
   1. Sheet Material: ASTM E1745, Class A; 15 mil thickness, stated by manufacturer as suitable for installation in contact with soil or granular fill under concrete slabs. Single ply polyethylene is prohibited.
   2. Accessory Products: Vapor retarder manufacturer's recommended tape, adhesive, mastic, prefabricated boots, etc., for sealing seams and penetrations.

B. Non-Shrink Cementitious Grout: Premixed compound consisting of nonmetallic aggregate, cement, water reducing and plasticizing agents.
   1. Grout: Comply with ASTM C1107/C1107M.
   2. Minimum Compressive Strength at 48 Hours, ASTM C109/C109M: 2,000 pounds per square inch.
   3. Minimum Compressive Strength at 28 Days, ASTM C109/C109M: 7,000 pounds per square inch.
   4. Products containing aluminum powder are not permitted.

2.6 BONDING AND JOINTING PRODUCTS

A. Latex Bonding Agent: Non-redispersable acrylic latex, complying with ASTM C1059/C1059M, Type II.

B. Epoxy Bonding System:
   1. Complying with ASTM C881/C881M and of Type required for specific application.

C. Hybrid Anchoring System:
   1. High performance injectable epoxy mortars are to be used for drilling and grouting steel rebar and threaded anchor rods into hardened concrete.
      a. Base Materials: Concrete, cracked and un-cracked.
      b. Base Material Condition: dry, submerged, water-filled, wet.
      c. Epoxy suitable for all-year use; cures at base material temperature range of 23 - 104 degrees fahrenheit.
      d. Allowable with hammer-drill, hollow drill bit system, and core drilling methods.
      e. Adhesive: Complying with ASTM C881/C881M and of Type required for specific application; Type N, Grade 2 and 3, Class A, B, and C except gel times.
      f. Anchor Rod:
         1) Moisture Exposed Anchors: ASTM F593, AISI Type 316 stainless steel, condition CW, with ASTM A194/A194M , Grade 8S (nitronic 60) stainless steel nuts and locknuts.
         2) Dry/Protected Anchors: ASTM F1554 Grade 36
   2. Adhesives shall have an evaluation report by ICC ES and be successfully tested in accordance with ICC-ES AC308.
   3. Minimum Embedment: 4 inches unless indicated otherwise on the Contract Drawings.
   4. Anchor capacity used in design shall be based on the technical data published by HILTI. Subsitution requests for alternate products must be approved in writing by the strucural engineer of record prior to use. Contractor shall provide calculations that have been sealed by antoher licensed engineer demonstratting that the substituted product is capable of meeting the performance of the specified product. Substitutions will be evaluated by

their having an ICC ESR showing compliance with the relevant building code for seismic uses, load resistance, installtion category, and installation instructions. Adhesive anchor evaluation will also consider creep, in-service temperature, installation temperature, moisture condition of the concrete, and drilling methods.

5. The contractor shall arrage an anchor manufacturer's representative to provide onsite installation training for all anchor products spedified. The structural engineer of record must recieve documented confirmation that all personnel who install anchors are trained prior to the commencement of anchor installation.

D. Slab Isolation Joint Filler: 1/2-inch thick, height equal to slab thickness, with removable top section forming 1/2-inch deep sealant pocket after removal.
   1. Material: ASTM D1751, cellulose fiber.

E. Slab Construction Joint Devices: Combination keyed joint form and screed, galvanized steel, with rectangular or round knockout holes for conduit or rebar to pass through joint form at 6 inches on center; ribbed steel stakes for setting.

F. Dowel Sleeves: Plastic sleeve and nailable plastic base for smooth, round, steel load-transfer dowels.

G. Plate Dowel System: Steel plate dowel and plastic dowel sleeve; with integral fasteners for attachment to formwork.

2.7 CURING MATERIALS

A. Evaporation Reducer: Liquid thin-film-forming compound that reduces rapid moisture loss caused by high temperature, low humidity, and high winds; intended for application immediately after concrete placement.

B. Moisture-Retaining Sheet: ASTM C171.
   1. Polyethylene film, white opaque, minimum nominal thickness of 4 mil, 0.004 inch.
   2. White-burlap-polyethylene sheet, weighing not less than 3.8 ounces per square yard.

C. Water: Potable, not detrimental to concrete.

2.8 CONCRETE MIX DESIGN

A. Proportioning Normal Weight Concrete: Comply with ACI PRC-211.1 recommendations.

B. Concrete Strength: Establish required average strength for each type of concrete on the basis of field experience or trial mixtures, as specified in ACI SPEC-301.
   1. For trial mixtures method, employ independent testing agency acceptable to Architect for preparing and reporting proposed mix designs.

C. Admixtures: Add acceptable admixtures as recommended in ACI PRC-211.1 and at rates recommended or required by manufacturer.
   1. Provide corrosion inhibitor and waterproofing admixture in all concrete mixes.

D. When a mineral aggregate hardener is to be used, consult with the manufacturer prior to concrete mix design submittal in order to determine its compatibility with the hardener.

E. Concrete Mix requirements:

Portion of Structure	28-day Minimum Strength (psi)	Slump (+/- 1")	Maximum Water/cement Ratio	Maximum Coarse Aggregate Size (ASTM C33)	Air Content (+/- 1.5%)	Fiber (type/dosage)
Chassis wash slabs and foundations	4500	4"	0.45	#57	6%	n/a

2.9 FABRICATING REINFORCEMENT

A. Fabricate steel reinforcement according to CRSI's "Manual of Standard Practice."

2.10 MIXING

A. On Project Site: Mix in drum type batch mixer, complying with ASTM C685/C685M. Mix each batch not less than 1-1/2 minutes and not more than 5 minutes.
   1. Fiber Reinforcement: Batch and mix as recommended by manufacturer for specific project conditions.

B. Transit Mixers: Comply with ASTM C94/C94M.

C. Adding Water: If concrete arrives on-site with slump less than suitable for placement, do not add water that exceeds the maximum water-cement ratio or exceeds the maximum permissible slump.

D. Furnish batch ticket information.

E. When air temperature is between 85 and 90 deg F, reduce mixing and delivery time from 1-1/2 hours to 75 minutes; when air temperature is above 90 deg F, reduce mixing and delivery time to 60 minutes.

PART 3 EXECUTION

3.1 EXAMINATION

A. Verify lines, levels, and dimensions before proceeding with work of this section.

3.2 PREPARATION

A. Formwork: Comply with requirements of ACI SPEC-301. Design and fabricate forms to support all applied loads until concrete is cured and for easy removal without damage to concrete.

B. Verify that forms are clean and free of rust before applying release agent.

C. Chamfer exterior corners and edges of permanently exposed concrete.

D. Coordinate placement of embedded items with erection of concrete formwork and placement of form accessories.

E. Prepare existing concrete surfaces to be repaired according to ICRI 310.2R, CSP 6.

F. Where new concrete is to be bonded to previously placed concrete, prepare existing surface by cleaning and applying bonding agent in according to bonding agent manufacturer's instructions.
   1. Use epoxy bonding system for bonding to damp surfaces, for structural load-bearing applications, and where curing under humid conditions is required.
   2. Use latex bonding agent only for non-load-bearing applications.

G. In locations where new concrete is doweled to existing work, drill holes in existing concrete, install adhesive anchor system material, and insert steel dowels.

H. Interior Slabs on Grade: Install vapor retarder under interior slabs on grade. Comply with ASTM E1643. Lap joints minimum 6 inches. Seal joints, seams and penetrations watertight with manufacturer's recommended products and follow manufacturer's written instructions. Repair damaged vapor retarder before covering.
   1. Vapor Retarder Over Granular Fill: Install compactible granular fill before placing vapor retarder as indicated on drawings. Do not use sand.

3.3 INSTALLING REINFORCEMENT AND OTHER EMBEDDED ITEMS

A. Comply with requirements of ACI SPEC-301. Clean reinforcement of loose rust and mill scale, and accurately position, support, and secure in place to achieve not less than minimum concrete coverage required for protection. 'Wet sticking' components in concrete is not acceptable.

B. Install welded wire reinforcement in maximum possible lengths, and offset end laps in both directions. Splice laps with tie wire.

C. Verify that anchors, seats, plates, reinforcement and other items to be cast into concrete are accurately placed, positioned securely, and will not interfere with concrete placement.

3.4 PLACING CONCRETE

A. Place concrete in accordance with ACI PRC-304.

B. Place concrete for floor slabs in accordance with ACI PRC-302.1.

C. Notify Architect not less than 24 hours prior to commencement of placement operations.

D. Maintain records of concrete placement. Record date, location, quantity, air temperature, and test samples taken.

E. Ensure reinforcement, inserts, waterstops, embedded parts, and formed construction joint devices will not be disturbed during concrete placement.

F. Place concrete continuously without construction (cold) joints wherever possible; where construction joints are necessary, before next placement prepare joint surface by removing laitance and exposing the sand and sound surface mortar, by sandblasting or high-pressure water jetting.

G. Finish floors level and flat, unless otherwise indicated, within the tolerances specified below.

H. Do not add water to concrete during delivery, at Project site, or during placement unless approved by Architect.

3.5 SLAB JOINTING

A. Locate joints as indicated on drawings.

B. Anchor joint fillers and devices to prevent movement during concrete placement.

C. Isolation Joints: Use preformed joint filler with removable top section for joint sealant, total height equal to thickness of slab, set flush with top of slab.

D. Load Transfer Construction and Contraction Joints: Install load transfer devices as indicated; saw cut joint at surface as indicated for contraction joints.

E. Saw Cut Contraction Joints: Saw cut joints before concrete begins to cool, within 4 to 12 hours after placing; use 3/16 inch thick blade and cut at least 1 inch deep but not less than one quarter (1/4) the depth of the slab.

F. Construction Joints: Where not otherwise indicated, use metal combination screed and key form, with removable top section for joint sealant.

G. Doweled Joints: Install dowel bars and support assemblies at joints where indicated. Lubricate or asphalt coat one-half of dowel length to prevent concrete bonding to one side of joint.
   1. Application: Provide at all sidewalks, ramps, stoops, or any other site concrete abuting to building exterior doors/thresholds, and provide at all other locations indicated on the drawings.
   2. Unless noted otherwise, provide the following dowels:
      a. Vehicular Traffic: 3/4" inch diameter x 18 inches long smooth dowels at 12 inches o.c. Drill and epoxy grout one end w/ 8 inch embedment.
   3. Coordinate dowel installation with the site concrete contractor.

3.6 FLOOR FLATNESS AND LEVELNESS TOLERANCES

A. Maximum Variation of Surface Flatness:
   1. Exposed Concrete Floors: 1/4 inch in 10 feet.

B. Correct the slab surface if tolerances are less than specified.

3.7 CONCRETE FINISHING

A. Repair surface defects, including tie holes, immediately after removing formwork.

B. Unexposed Form Finish: Rub down or chip off fins or other raised areas 1/4 inch or more in height.

C. Exposed Form Finish: Rub down or chip off and smooth fins or other raised areas 1/4 inch or more in height. Provide finish as follows:

1. Smooth Rubbed Finish: Wet concrete and rub with carborundum brick or other abrasive, not more than 24 hours after form removal.

D. Concrete Slabs: Finish to requirements of ACI PRC-302.1 and as follows:
1. Float Finish: Consolidate surface with power-driven floats or by hand floating if area is small or inaccessible to power driven floats. Restraighten, cut down high spots, and fill low spots. Repeat float passes and restraightening until surface is left with a uniform, smooth, granular texture.
2. Trowel Finish: After applying float finish, apply first troweling and consolidate concrete by hand or power-driven trowel. Continue troweling passes and restraighten until surface is free of trowel marks and uniform in texture and appearance. Grind smooth any surface defects that would telegraph through applied coatings or floor coverings.
3. Trowel and Fine-Broom Finish: Apply a first trowel finish to surfaces indicated and where buses are stored or maintained. While concrete is still plastic, slightly scarify surface with a fine broom.
4. Other Surfaces to Be Left Exposed: Trowel as described in ACI PRC-302.1, minimizing burnish marks and other appearance defects.
5. Chemical Hardener: See Section 033511 - Concrete Floor Finishes.

E. In areas with floor drains, maintain floor elevation at walls; pitch surfaces uniformly to drains at 1:100 nominal.

F. Related Unformed Surfaces: At tops of walls, horizontal offsets, and similar unformed surfaces adjacent to formed surfaces, strike off smooth and finish with a texture matching adjacent formed surfaces. Continue final surface treatment of formed surfaces uniformly across adjacent unformed surfaces, unless otherwise indicated.

3.8 CURING AND PROTECTION

A. Comply with requirements of ACI PRC-308. Immediately after placement, protect concrete from premature drying, excessively hot or cold temperatures, and mechanical injury.

B. Maintain concrete with minimal moisture loss at relatively constant temperature for period necessary for hydration of cement and hardening of concrete.
1. Normal concrete: Not less than seven days.

C. Formed Surfaces: Cure by moist curing with forms in place for full curing period.

D. Surfaces Not in Contact with Forms:
1. Slabs and Floors To Receive Adhesive-Applied Flooring: Curing compounds and other surface coatings are usually considered unacceptable by flooring and adhesive manufacturers. If such materials must be used, either obtain the approval of the flooring and adhesive manufacturers prior to use or remove the surface coating after curing to flooring manufacturer's satisfaction.
2. Initial Curing: Start as soon as free water has disappeared and before surface is dry. Keep continuously moist for not less than three days by water ponding, water-saturated sand, water-fog spray, or saturated burlap.
a. Saturated Burlap: Saturate burlap-polyethylene and place burlap-side down over floor slab areas, lapping ends and sides; maintain in place.
3. Final Curing: Begin after initial curing but before surface is dry.

a. Moisture-Retaining Sheet: Lap strips not less than 3 inches and seal with waterproof tape or adhesive; secure at edges.

4. Wait a minimum of 48 hours after finishing slab before allowing foot traffic on slab. Do not allow construction traffic or loads to be applied to slabs on grade until the concrete is 7 days old.

E. Slab Protection: protect concrete flatwork (that is exposed to view in the finished state) during construction. Use a protective covering like plastic sheet or sheathing products, ensuring the concrete cures propoerly while shielding it from damage from foot traffic, heavy equipment, and other construction debris.

3.9 JOINT FILLING

A. Prepare, clean, and install joint filler according to manufacturer's written instructions.

B. Remove dirt, debris, saw cuttings, curing compounds, and sealers from joints; leave contact faces of joint clean and dry.

C. Install joint filler full depth in saw-cut joints and at least 2 inches deep in formed joints. Overfill joint and trim joint filler flush with top of joint after hardening.

3.10 CONCRETE SURFACE REPAIRS

A. Defective Concrete: Repair and patch defective areas when approved by Architect. Remove and replace concrete that cannot be repaired and patched to Architect's approval.

B. Patching Mortar: Mix dry-pack patching mortar, consisting of one part portland cement to two and one-half parts fine aggregate passing a No. 16 sieve, using only enough water for handling and placing.

C. Repairing Formed Surfaces: Surface defects include color and texture irregularities, cracks, spalls, air bubbles, honeycombs, rock pockets, fins and other projections on the surface, and stains and other discolorations that cannot be removed by cleaning.

1. Immediately after form removal, cut out honeycombs, rock pockets, and voids more than 1/2 inch in any dimension in solid concrete, but not less than 1 inch in depth. Make edges of cuts perpendicular to concrete surface. Clean, dampen with water, and brush-coat holes and voids with bonding agent. Fill and compact with patching mortar before bonding agent has dried. Fill form-tie voids with patching mortar or cone plugs secured in place with bonding agent.
2. Repair defects on surfaces exposed to view by blending white portland cement and standard portland cement so that, when dry, patching mortar will match surrounding color. Patch a test area at inconspicuous locations to verify mixture and color match before proceeding with patching. Compact mortar in place and strike off slightly higher than surrounding surface.
3. Repair defects on concealed formed surfaces that affect concrete's durability and structural performance as determined by Architect.

D. Repairing Unformed Surfaces: Test unformed surfaces, such as floors and slabs, for finish and verify surface tolerances specified for each surface. Correct low and high areas. Test surfaces sloped to drain for trueness of slope and smoothness; use a sloped template.

1. Repair finished surfaces containing defects. Surface defects include spalls, popouts, honeycombs, rock pockets, crazing and cracks in excess of 0.01 inch wide or that penetrate to reinforcement or completely through unreinforced sections regardless of width, and other objectionable conditions.
2. After concrete has cured at least 14 days, correct high areas by grinding.
3. Correct localized low areas during or immediately after completing surface finishing operations by cutting out low areas and replacing with patching mortar. Finish repaired areas to blend into adjacent concrete.
4. Correct other low areas scheduled to receive floor coverings with a repair underlayment. Prepare, mix, and apply repair underlayment and primer according to manufacturer's written instructions to produce a smooth, uniform, plane, and level surface. Feather edges to match adjacent floor elevations.
5. Correct other low areas scheduled to remain exposed with a repair topping. Cut out low areas to ensure a minimum repair topping depth of 1/4 inch to match adjacent floor elevations. Prepare, mix, and apply repair topping and primer according to manufacturer's written instructions to produce a smooth, uniform, plane, and level surface.
6. Repair defective areas, except random cracks and single holes 1 inch or less in diameter, by cutting out and replacing with fresh concrete. Remove defective areas with clean, square cuts and expose steel reinforcement with at least a 3/4-inch clearance all around. Dampen concrete surfaces in contact with patching concrete and apply bonding agent. Mix patching concrete of same materials and mixture as original concrete except without coarse aggregate. Place, compact, and finish to blend with adjacent finished concrete. Cure in same manner as adjacent concrete.
7. Repair random cracks and single holes 1 inch or less in diameter with patching mortar. Groove top of cracks and cut out holes to sound concrete and clean off dust, dirt, and loose particles. Dampen cleaned concrete surfaces and apply bonding agent. Place patching mortar before bonding agent has dried. Compact patching mortar and finish to match adjacent concrete. Keep patched area continuously moist for at least 72 hours.

E. Perform structural repairs of concrete, subject to Architect's approval, using epoxy adhesive and patching mortar.

F. Repair materials and installation not specified above may be used, subject to Architect's approval.

3.11 FIELD QUALITY CONTROL

A. An independent testing agency will perform field quality control tests, as specified in Section 014000 - Quality Requirements.

B. Special Inspections: Special Inspections required are enumerated in the Schedule of Special Inspection Services contained in Section 014533 - Code-Required Special Inspections and Procedures.

C. Provide free access to concrete operations at project site and cooperate with appointed firm.

D. Submit proposed mix design of each class of concrete to inspection and testing firm for review prior to commencement of concrete operations.

E. Tests of concrete and concrete materials may be performed at any time to ensure compliance with specified requirements.

F. Testing Frequency: Obtain samples from the first three (3) batches at the start of placement for each day's pour of each concrete mixture exceeding 5 cu. yd., plus one (1) set for each additional 50 cu. yd. or fraction thereof.
   1. Should any portion of required testing and/or batch time not meet specified requirements, the concrete batch in question shall be rejected. Testing shall then be performed until three (3) consecutive batches of concrete meets all specified requirements, including batch time. Testing shall return to the specified frequency only when all testing requirements have been satisfied for three (3) consecutive batches of concrete.
      a. All appropriate parties shall be notified immediately of each failed test.
      b. Additional testing required due to concrete not meeting specified requirements shall be performed at contractor’s expense.
   2. When frequency of testing will provide fewer than five (5) composite samples of each concrete mixture, testing shall be conducted from at least five (5) randomly selected batches or from each batch if fewer than five (5) are used.

G. Compressive Strength Tests: ASTM C31/C31M and ASTM C39/C39M, for each test, mold and laboratory cure five concrete test cylinders. Obtain test samples for every 50 cubic yards or less of each class of concrete placed. Test one specimen at 7-days, test three specimens at 28-days, and hold one specimen in reserve for later testing if required.

H. Take one additional test cylinder during cold weather concreting, cured on job site under same conditions as concrete it represents.

I. When strength of field-cured cylinders is less than 85 percent of companion laboratory-cured cylinders, Contractor shall evaluate operations and provide corrective procedures for protecting and curing in-place concrete.

J. Perform one slump test for each set of test cylinders taken, following procedures of ASTM C143/C143M. Perform additional tests when concrete consistency appears to change.

K. Air Content: ASTM C 231, pressure method, for normal-weight concrete; ASTM C173/C173M, volumetric method, for structural lightweight concrete; one test for each composite sample, but not less than one test for each day's pour of each concrete mixture.

L. Concrete Temperature: ASTM C 1064; one test hourly when air temperature is 40 deg F and below and when 80 deg F and above, and one test for each composite sample.

M. Nondestructive Testing: Impact hammer, sonoscope, or other nondestructive device may be permitted by Architect but will not be used as sole basis for approval or rejection of concrete.

N. Additional Tests: Testing and inspecting agency shall make additional tests of concrete when test results indicate that slump, air entrainment, compressive strengths, or other requirements have not been met, as directed by Architect. Testing and inspecting agency may conduct tests to determine adequacy of concrete by cored cylinders complying with ASTM C 42 or by other methods as directed by Architect.

O. Additional testing and inspecting, at Contractor's expense, will be performed to determine compliance of replaced or additional work with specified requirements.

3.12 DEFECTIVE CONCRETE

A. Test Results: The testing agency shall report test results in writing to Architect and Contractor within 24 hours of test.

B. Defective Concrete: Concrete not complying with required lines, details, dimensions, tolerances or specified requirements.

C. Correct deficiencies in the Work that test reports and inspections indicate dos not comply with the Contract Documents.

D. Repair or replacement of defective concrete will be determined by the Architect. The cost of additional testing shall be borne by Contractor when defective concrete is identified.

E. Do not patch, fill, touch-up, repair, or replace exposed concrete except upon express direction of Architect for each individual area.

3.13 PROTECTION

A. Do not permit traffic over unprotected concrete floor surface until fully cured.

END OF SECTION 033000

SECTION 033511 - CONCRETE FLOOR FINISHES

PART 1 GENERAL

1.1 SECTION INCLUDES

A. Dry shake hardeners.

B. Penetrating sealers.

1.2 RELATED REQUIREMENTS

A. Section 033000 - Cast-in-Place Concrete: Finishing of concrete surface to tolerance; floating, troweling, and similar operations; curing.

1.3 ADMINISTRATIVE REQUIREMENTS

A. Coordination:

B. Coordinate the work with concrete floor placement and concrete floor curing.

1.4 SUBMITTALS

A. See Section 013000 - Administrative Requirements, for submittal procedures.

B. Product Data: Manufacturer's published data on each finishing product, including information on compatibility of different products and limitations.

C. Maintenance Data: Provide data on maintenance and renewal of applied finishes.

D. Specimen warranty.

E. Executed warranty.

1.5 QUALITY ASSURANCE

A. Manufacturer Qualifications: Company specializing in manufacturing products specified in this section, with at least 3 years of documented experience.

B. Installer Qualifications: Company specializing in performing work of type specified and with at least 3 years of documented experience.

1.6 DELIVERY, STORAGE, AND HANDLING

A. Deliver materials in manufacturer's sealed packaging, including application instructions.

1.7 FIELD CONDITIONS

A. Maintain ambient temperature of 50 degrees F minimum.

1.8 WARRANTY

A. See Section 017800 - Closeout Submittals for additional warranty requirements.

B. Manufacturer Warranty: Provide two-year manufacturer warranty commencing on the Date of Substantial Completion.

C. Installer Warranty: Provide two-year manufacturer warranty commencing on the Date of Substantial Completion.

D. Finish Warranty: Provide five-year manufacturer warranty against excessive degradation of finish. Include provision for replacement of units with excessive fading, chalking, or flaking.

PART 2 PRODUCTS

2.1 APPLICATIONS

A. Unless otherwise indicated on drawings, finish concrete floors using dry shake hardener, dissipating curing compound, and a penetrating sealer.

2.2 DENSIFIERS AND HARDENERS

A. Dry Shake Hardener: Premixed dry powder for spreading on and working into concrete surface prior to set.
   1. Composition: Non-oxidizing metallic aggregate.
      a. Products:
         1) Euclid Chemical Company; DIAMOND PLATE: www.euclidchemical.com/#sle.
         2) Approved Equivalent.

2.3 COATINGS

A. Penetrating Sealer: Transparent, nonyellowing, water- or solvent-based coating.
   1. Composition: Silane.
      a. Products:
         1) WR Meadows; Intraguard
         2) Or equivalent

PART 3 EXECUTION

3.1 EXAMINATION

A. Verify that floor surfaces are acceptable to receive the work of this section.

B. Verify that flaws in concrete have been patched and joints filled with methods and materials suitable for further finishes.

3.2 GENERAL

A. Apply materials in accordance with manufacturer's instructions.

3.3 COATING APPLICATION

A. Verify that surface is free of previous coatings, sealers, curing compounds, water repellents, laitance, efflorescence, fats, oils, grease, wax, soluble salts, residues from cleaning agents, and other impediments to adhesion.

B. Verify that water vapor emission from concrete and relative humidity in concrete are within limits established by coating manufacturer.

C. Protect adjacent non-coated areas from drips, overflow, and overspray; immediately remove excess material.

D. Apply coatings in accordance with manufacturer's instructions, matching approved mock-ups for color, special effects, sealing and workmanship.

END OF SECTION 033511

DIVISION 05

SECTION 051200 - STRUCTURAL STEEL FRAMING

PART 1 GENERAL

1.1 SECTION INCLUDES

A. Structural steel framing members.

B. Base plates, shear stud connectors.

C. Grout.

D. Accessories.

1.2 RELATED REQUIREMENTS

A. Section 014000 - Quality Requirements.

B. Section 014533 - Code-Required Special Inspections and Procedures.

C. Section 055305 - Metal Gratings and Floor Plates: Steel fabrications affecting structural steel work.

1.3 REFERENCE STANDARDS

A. AISC (MAN) - Steel Construction Manual.

B. AISC 303 - Code of Standard Practice for Steel Buildings and Bridges.

C. ASTM A36/A36M - Standard Specification for Carbon Structural Steel.

D. ASTM A108 - Standard Specification for Steel Bar, Carbon and Alloy, Cold-Finished.

E. ASTM A123/A123M - Standard Specification for Zinc (Hot-Dip Galvanized) Coatings on Iron and Steel Products.

F. ASTM A307 - Standard Specification for Carbon Steel Bolts, Studs, and Threaded Rod 60 000 PSI Tensile Strength.

G. ASTM A500/A500M - Standard Specification for Cold-Formed Welded and Seamless Carbon Steel Structural Tubing in Rounds and Shapes.

H. ASTM A563/A563M - Standard Specification for Carbon and Alloy Steel Nuts (Inch and Metric).

I. ASTM A992/A992M - Standard Specification for Structural Steel Shapes.

J. ASTM C827/C827M - Standard Test Method for Change in Height at Early Ages of Cylindrical Specimens of Cementitious Mixtures.

K. ASTM E164 - Standard Practice for Contact Ultrasonic Testing of Weldments.

L. ASTM E165/E165M - Standard Practice for Liquid Penetrant Testing for General Industry.

M. ASTM E709 - Standard Guide for Magnetic Particle Testing.

N. ASTM F436/F436M - Standard Specification for Hardened Steel Washers Inch and Metric Dimensions.

O. ASTM F3125/F3125M - Standard Specification for High Strength Structural Bolts and Assemblies, Steel and Alloy Steel, Heat Treated, Inch Dimensions 120 ksi and 150 ksi Minimum Tensile Strength, and Metric Dimensions 830 MPa and 1040 MPa Minimum Tensile Strength.

P. AWS A2.4 - Standard Symbols for Welding, Brazing, and Nondestructive Examination.

Q. AWS B2.1/B2.1M - Specification for Welding Procedure and Performance Qualification.

R. AWS D1.1/D1.1M - Structural Welding Code - Steel.

S. IAS AC172 - Accreditation Criteria for Fabricator Inspection Programs for Structural Steel AC172.

T. RCSC (HSBOLT) - Specification for Structural Joints Using High-Strength Bolts; Research Council on Structural Connections.

U. SSPC-Paint 20 - Zinc-Rich Coating (Type I - Inorganic, and Type II - Organic).

1.4 SUBMITTALS

A. See Section 013000 - Administrative Requirements, for submittal procedures.

B. Product Data: For each type of product indicated.

C. Shop Drawings: Show fabrication of structural-steel components.
   1. Indicate profiles, sizes, spacing, locations of structural members, openings, attachments, and fasteners.
   2. Connections not detailed.
   3. Indicate welded connections with AWS A2.4 welding symbols. Indicate net weld lengths.

D. Welders' Qualification Statement: Welders' certificates in accordance with AWS B2.1/B2.1M and dated no more than 12 months before start of scheduled welding work.

E. Fabricator's Qualification Statement: Provide documentation showing steel fabricator is accredited under IAS AC172.

1.5 QUALITY ASSURANCE

A. Fabricate structural steel members in accordance with AISC (MAN) "Steel Construction Manual."

B. Installer Qualifications, shall comply with one of the following:
   1. Erector shall be a qualified installer who participates in the AISC Quality Certification Program and is designated an AISC-Certified Erector, Category ACSE CSE.
   2. For non AISC-Certified Erectors, installer shall comply with the following practices and procedure requirements, and submit supporting documentation.
      a. Provide a written safety plan, compliant with governmental regulations, that is understood and implemented by supervision and erection crews.
      b. All welders are qualified per AWS D1.1, "Structural Welding Code--Steel."
      c. Provide a written bolt tightening procedure, compliant with the Research Council on Structural Connections (RCSC) specifications.
      d. Provide a written fall protection procedure, periodically monitored and recorded by a qualified fall protection personal.
      e. Crane operators shall be CCO certified or equivalently trained.
      f. Provide project specific erection plans with all hoisting and erection requirements.
      g. Erector shall provide a project history, a minimum of four projects, of similar size jobs with reference contacts.

C. Fabricator Qualifications, shall comply with one of the following. Additional requirements are provided in the “Source Quality Control” Article.
   1. Fabricator shall be a qualified fabricator who participates in the AISC Quality Certification Program and is certified to the “Standard for Steel Building Structures (STD).”
   2. For non AISC-Certified Plants, comply with independent testing and inspection requirements.
      a. Fabricator shall be registered with and approved by authorities having jurisdiction.
      b. Erector shall provide a project history, a minimum of four projects, of similar size jobs with reference contacts.

D. Maintain one copy of each document on site.

E. Welder Qualifications: Welding processes and welding operators qualified in accordance with AWS D1.1/D1.1M and no more than 12 months before start of scheduled welding work.

F. Comply with applicable provisions of the following specifications and documents:
   1. AISC 341 and AISC 341s1.
   2. AISC 360.

G. Preinstallation Conference: Conduct conference at Project site to comply with requirements in Division 01 Sections.

1.6 DELIVERY, STORAGE, AND HANDLING

A. Deliver structural steel to Project site in such quantities and at such times to ensure continuity of installation.

B. Store materials to permit easy access for inspection and identification. Keep steel members off ground and spaced by using pallets, dunnage, or other supports and spacers. Protect steel members and packaged materials from corrosion and deterioration.

1. Do not store materials on structure in a manner that might cause distortion, damage, or overload to members or supporting structures. Repair or replace damaged materials or structures as directed.

C. Store fasteners in a protected place in sealed containers with manufacturer's labels intact.
1. Fasteners may be repackaged provided Owner's testing and inspecting agency observes repackaging and seals containers.
2. Clean and relubricate bolts and nuts that become dry or rusty before use.
3. Comply with manufacturers' written recommendations for cleaning and lubricating ASTM F 1852 fasteners and for retesting fasteners after lubrication.

1.7 COORDINATION

A. Coordinate selection of shop primers with topcoats to be applied over them. Comply with paint and coating manufacturers' recommendations to ensure that shop primers and topcoats are compatible with one another.

B. Coordinate installation of anchorage items to be embedded in or attached to other construction without delaying the Work. Provide setting diagrams, sheet metal templates, instructions, and directions for installation.

PART 2 PRODUCTS

2.1 MATERIALS

A. Steel Angles and Plates: ASTM A36/A36M.
1. Utilize for miscellaneous plates , bent plates, roof edge plates, and connection shear plates, unless otherwise noted.

B. Rolled Steel Structural Shapes: ASTM A992/A992M.

C. Cold-Formed Structural Tubing: ASTM A500/A500M, Grade C.

D. Shear Stud Connectors: Made from ASTM A108 Grade 1015 bars.

E. High-Strength Structural Bolts, Nuts, and Washers: ASTM F3125/F3125M, Type 1, with matching compatible ASTM A563/A563M nuts and ASTM F436/F436M washers.

F. Threaded Rods: ASTM A 36.
1. Nuts: ASTM A 563 heavy hex carbon steel.
2. Washers: ASTM F 436 hardened or ASTM A 36 carbon steel.

G. Welding Materials: AWS D1.1/D1.1M; type required for materials being welded.

H. Grout: ASTM C1107/C1107M; Non-shrink; premixed compound consisting of non-metallic aggregate, cement, water reducing and plasticizing agents.
1. Minimum Compressive Strength at 48 Hours: 2,000 pounds per square inch.
2. Minimum Compressive Strength at 28 Days: 7,000 pounds per square inch.
3. Height Change, Plastic State; when tested according to ASTM C827/C827M:
a. Maximum: Plus 4 percent.

b. Minimum: Plus 1 percent.

I. Touch-Up Primer for Galvanized Surfaces: SSPC-Paint 20 Type I - Inorganic, complying with VOC limitations of authorities having jurisdiction.

2.2 FABRICATION

A. Shop fabricate to greatest extent possible. Fabricate according to AISC's "Code of Standard Practice for Steel Buildings and Bridges" and AISC 360.

B. Thermal Cutting: Perform thermal cutting by machine to greatest extent possible.

C. Bolt Holes: Cut, drill, mechanically thermal cut, or punch standard bolt holes perpendicular to metal surfaces.

D. Finishing: Accurately finish ends of columns and other members transmitting bearing loads.

E. Cleaning: Clean and prepare steel surfaces that are to remain unpainted according to SSPC-SP 1, "Solvent Cleaning" or SSPC-SP 2, "Hand Tool Cleaning."

F. Shear Connectors: Prepare steel surfaces as recommended by manufacturer of shear connectors. Use automatic end welding of headed-stud shear connectors according to AWS D1.1 and manufacturer's written instructions. Space shear stud connectors equally, quantiy as shown on drawings.

G. Continuously seal joined members by continuous welds. Grind exposed welds smooth.

H. Fabricate connections for bolt, nut, and washer connectors.

2.3 FINISH

A. Galvanize structural steel members to comply with ASTM A123/A123M. Provide minimum 1.7 oz/sq ft galvanized coating.
1. Fill vent holes and grind smooth after galvanizing.
2. Galvanize lintels and shelf angles attached to structural-steel frame and located in exterior walls.
3. Galvanizing Repair Paint: SSPC-Paint 20.

2.4 SOURCE QUALITY CONTROL

A. For AISC certified facilities, submit a written program for the proposed fabrication quality control. As a minimum, perform at least the following shop tests and inspections and submit test reports. If Fabricator's facility is not AISC certified, Contractor will engage an independent testing and inspecting agency, acceptable to the Owner, to perform shop inspections and tests and to prepare test reports.
1. Provide testing agency with access to places where structural-steel work is being fabricated or produced to perform tests and inspections.
2. Testing agency will conduct and interpret tests and state in each report whether test specimens comply with or deviate from requirements.

B. Correct deficiencies in Work that test reports and inspections indicate does not comply with the Contract Documents.

C. Additional testing, at Contractor's expense, will be performed to determine compliance of corrected Work with specified requirements.

D. High-Strength Bolts: Provide testing and verification of shop-bolted connections in accordance with RCSC (HSBOLT) "Specification for Structural Joints Using High-Strength Bolts".

E. Welded Connections: Visually inspect all shop-welded connections and test welds using one of the following according to AWS D1.1:
   1. Radiographic testing performed in accordance with ASTM E94/E94M.
   2. Ultrasonic testing performed in accordance with ASTM E164.
   3. Liquid penetrant inspection performed in accordance with ASTM E165/E165M.
   4. Magnetic particle inspection performed in accordance with ASTM E709.

F. In addition to visual inspection, shop-welded shear connectors will be tested and inspected according to requirements in AWS D1.1 for stud welding and as follows:
   1. Bend tests will be performed if visual inspections reveal either a less-than- continuous 360-degree flash or welding repairs to any shear connector.
   2. Tests will be conducted on additional shear connectors if weld fracture occurs on shear connectors already tested, according to requirements in AWS D1.1.

PART 3 EXECUTION

3.1 EXAMINATION

A. Verify that conditions are appropriate for erection of structural steel and that the work may properly proceed.

B. Proceed with installation only after unsatisfactory conditions have been corrected.

3.2 ERECTION

A. Erect structural steel in compliance with AISC 303.

B. Allow for erection loads and provide sufficient temporary bracing to maintain structure in safe condition, plumb, and in true alignment until completion of erection and installation of permanent bracing.

C. Field weld components indicated on shop drawings.

D. Use carbon steel bolts only for temporary bracing during construction, unless otherwise specifically permitted on drawings. Install high-strength bolts in accordance with RCSC (HSBOLT) "Specification for Structural Joints Using High-Strength Bolts".

E. Do not field cut or alter structural members without approval of Architect.

F. Do not enlarge unfair holes in members by burning or using drift pins. Ream holes that must be enlarged to admit bolts.

G. After erection, prime welds, abrasions, and surfaces not shop primed, except surfaces to be in contact with concrete.

H. Base and Bearing Plates: Clean concrete- and masonry-bearing surfaces of bond-reducing materials, and roughen surfaces prior to setting base and bearing plates. Clean bottom surface of base and bearing plates.
   1. Set base and bearing plates for structural members on wedges, shims, or setting nuts as required.
   2. Weld plate washers to top of base plate.
   3. Snug-tighten or pretension anchor rods as directed, after supported members have been positioned and plumbed. Do not remove wedges or shims but, if protruding, cut off flush with edge of base or bearing plate before packing with grout.
   4. Promptly pack grout solidly between bearing surfaces and base or bearing plates so no voids remain. Neatly finish exposed surfaces; protect grout and allow to cure. Comply with manufacturer's written installation instructions for shrinkage-resistant grouts.

I. Shear Connectors: Prepare steel surfaces as recommended by manufacturer of shear connectors. Use automatic end welding of headed-stud shear connectors according to AWS D1.1 and manufacturer's written instructions.

3.3 TOLERANCES

A. Maximum Variation From Plumb: 1/4 inch per story, non-cumulative.

B. Maximum Offset From True Alignment: 1/4 inch.

3.4 FIELD QUALITY CONTROL

A. An independent testing agency will perform field quality control tests, as specified in Section 014000 - Quality Requirements and 014533 - Code-Required Special Inspections and Procedures.

B. Correct deficiencies in or remove and replace structural steel that inspections and test reports indicate do not comply with specified requirements.

C. Additional testing, at Contractor's expense, will be performed to determine compliance of corrected Work with specified requirements.

D. High-Strength Bolts: Provide testing and verification of field-bolted connections in accordance with RCSC (HSBOLT) "Specification for Structural Joints Using High-Strength Bolts".

E. Welded Connections: Visually inspect all field-welded connections according to AWS D1.1
   1. Ultrasonic testing performed in accordance with ASTM E164.
      a. 100 % of all full penetration welds.
      b. 100 % of all column splices in braced or moment frames.
      c. 20 % of all other partial penetration column splices.
   2. Magnetic particle inspection performed in accordance with ASTM E709.
      a. 20 % of all connection fillet welds at random, final pass only.
      b. 20 % of all continuity plate and bracing gusset plate fillet welds at random, final pass only.

c. 100 % of tension member fillet welds (i.e. hanger connection plates and other similar connections) for root and final passes.
d. 20 % of length of built-up column member partial penetration and fillet welds at random for root and final passes.
e. 100 % of length of built-up girder member partial penetration and fillet welds at random for root and final passes.

3.5 REPAIRS AND PROTECTION

A. Repair damaged galvanized coatings on galvanized items with galvanized repair paint according to ASTM A 780 and manufacturer's written instructions.

B. Touchup Painting: After installation, promptly clean, prepare, and prime or reprime field connections, rust spots, and abraded surfaces of prime-painted joists and accessories, bearing plates, and abutting structural steel.
1. Clean and prepare surfaces by SSPC-SP 2 hand-tool cleaning or SSPC-SP 3 power-tool cleaning.
2. Apply a compatible primer of same type as shop primer used on adjacent surfaces.

END OF SECTION 051200

SECTION 055305 - METAL GRATINGS AND FLOOR PLATES

PART 1 GENERAL

1.1 SECTION INCLUDES

A. Formed metal floor gratings.

1.2 REFERENCE STANDARDS

A. ASTM A36/A36M - Standard Specification for Carbon Structural Steel.

B. ASTM A123/A123M - Standard Specification for Zinc (Hot-Dip Galvanized) Coatings on Iron and Steel Products.

C. ASTM A153/A153M - Standard Specification for Zinc Coating (Hot-Dip) on Iron and Steel Hardware.

D. ASTM B211/B211M - Standard Specification for Aluminum and Aluminum-Alloy Rolled or Cold Finished Bar, Rod, and Wire.

E. AWS B2.1/B2.1M - Specification for Welding Procedure and Performance Qualification.

F. AWS D1.1/D1.1M - Structural Welding Code - Steel.

G. NAAMM MBG 531 - Metal Bar Grating Manual.

H. SSPC-Paint 20 - Zinc-Rich Coating (Type I - Inorganic, and Type II - Organic).

1.3 SUBMITTALS

A. See Section 013000 - Administrative Requirements, for submittal procedures.

B. Product Data: Provide span and deflection tables.

C. Shop Drawings: Indicate details of component supports, openings, perimeter construction details, and tolerances.

D. Welders' Qualification Statement: Welders' certificates in accordance with AWS B2.1/B2.1M and dated within the previous 12 months.

E. Manufacturer's Installation Instructions: Indicate special requirements for opening and perimeter framing.

1.4 QUALITY ASSURANCE

A. Welder Qualifications: Welding processes and welding operators qualified within previous 12 months in accordance with AWS D1.1/D1.1M.

PART 2 PRODUCTS

2.1 PERFORMANCE REQUIREMENTS

A. Comply with applicable code for loading requirements. See live loading criteria provided on drawings.

B. Maximum Allowable Deflection Under Live Load: 1/240 of span; size components by single support design.

2.2 MATERIALS

A. Steel Framing: ASTM A36/A36M shapes, galvanized per ASTM A123/A123M.

B. Cross Bars: ASTM B211/B211M solid bars.

C. Welding Materials: AWS D1.1/D1.1M; type required for materials being welded.

D. Touch-Up Primer for Galvanized Surfaces: SSPC-Paint 20 Type I - Inorganic, complying with VOC limitations of authorities having jurisdiction.

2.3 ACCESSORIES

A. Fasteners and Saddle Clips: Galvanized steel:

B. Perimeter Closure: Of same material as grating.

2.4 FABRICATION

A. Grating Type: NAAMM MBG 531, Welded Type.

B. Mechanically clinch joints of intersecting metal sections.

C. Fabricate support framing for openings.

D. Top Surface: Serrated.

E. Bearing Bar: As indicated on drawings.

F. Cross Bar: As indicated on drawings.

2.5 FINISHES

A. Galvanizing for Steel Shapes: ASTM A123/A123M.

B. Galvanizing for Steel Hardware: ASTM A153/A153M.

PART 3 EXECUTION

3.1 EXAMINATION

A. Verify that opening sizes and dimensional tolerances are acceptable.

B. Verify that supports are correctly positioned.

3.2 INSTALLATION

A. Install components in accordance with manufacturer's instructions.

B. Place frames in correct position, plumb and level.

C. Mechanically cut galvanized finish surfaces. Do not flame cut.

D. Set perimeter closure flush with top of grating and surrounding construction.

E. Secure to prevent movement.

3.3 TOLERANCES

A. Comply with NAAMM MBG 531.

END OF SECTION 055305

DIVISION 14

SECTION 144500 - VEHICLE LIFTS

PART 1 – GENERAL

1.1 RELATED DOCUMENTS

A. The General Provisions of the Contract, including General and Special Conditions and the requirements of Division 1, apply to the Work in this Section.

1.2 WORK INCLUDED

A. Equipment items as listed below by Equipment Mark Number:

1. LIFT, DRIVE-ON, WATERPROOF, 62,000 LB. CAPACITY, 30 FT
   Equipment Mark Number: 5655
   Submittals: OM, T

A. **All items are owner furnished and contractor installed**. Roughing-in, installation of equipment and final connection of utilities, with labor, services, and incidentals necessary for complete and operational equipment installation.

1. Coordinate and verify all electrical, foundation, and utility connections with all trades prior to installation.

B. Piping, wiring, and switching between equipment and utilities.

1.2 QUALITY ASSURANCE

A. All components shall be fully tested and documented to operate as a complete system

B. Contractor to engage with a Manufacturer's Representative: The manufacturer authorized representative shall be factory trained and certified personnel providing service, startup, and quality control field labor for the project from their local office.

1. Installation: Provide a qualified manufacturer's representative at site to supervise work related to equipment installation, check out and start up.
2. Training: Provide technical representative to train Owner's maintenance personnel in operation and maintenance of specified equipment.

1.3 ACTION SUBMITTALS

A. Refer to above submittal requirements. The following abbreviations are used to indentify submittals required:

1. PD- Product Data
2. SD- Shop drawings
3. OM- Operation and Maintenance manual
4. T- Training of owners personnel on specific equipment items

B. Product Data: For each type of product indicated. Include rated capacities, operating characteristics, electrical requirements, wiring diagrams, and provided accessories.

1. Submit Product Data in accordance with Division 1 - General Requirements of these specifications.
2. Restrict submitted material to pertinent data. For instance, do not include manufacturer's complete catalog when pertinent information is contained on a single page.

C. Shop drawings and schematics detailing fabrication, installation, piping layout, materials and finishes, system interconnections, and utility connections of equipment assemblies. Indicate dimensions, weights, loadings, foundations, final dimensions, required clearances, method of field assembly, components, and location and size of each field connection.

1.4 INFORMATION SUBMITTALS

A. Field test and start-up reports, indicating and interpreting test results relative to compliance with specified requirements, for information.

B. Certificates: For certification required in "Quality Assurance" Article

1.5 CLOSEOUT SUBMITTALS

A. Operation and Maintenance Manual:

1. Provide a Complete parts list, operating instructions, and maintenance manual covering equipment at time of installation including, but not limited to:

a. Description of system and components.
b. Schematic diagrams of electrical, plumbing and compressed air systems.
c. Provide approved submittal as part of O&M clearly identifying manufacturer and provided model number.
d. Manufacturer's printed operating instructions.
e. Printed listing of periodic preventive maintenance items and recommended frequency required to validate warranties. Failure to provide maintenance information will indicate that preventive maintenance is not a condition for validation of warranties.
f. List of original manufacturer's parts, including suppliers' part numbers and cuts, recommended spare parts stockage quantity and local parts and service source.
g. Include vendor contact information for service and warranty
h. Include all start-up and testing reports

2. Assemble and provide copies of manual in 8-1/2 by 11 inch format. Foldout diagrams and illustrations are acceptable. Provide copies per provisions of Division 1 - General Requirements

1.6 WARRANTY

A. Warrant work specified herein for one year labor from final completion against defects in materials, function and workmanship unless otherwise noted below.

B. Defects shall include, but not be limited to noisy, rough or substandard operation; loose, damaged, and missing parts; and abnormal deterioration of finish.

C. Submit warranties in accordance with Division 1 - General Requirements of these specifications.

D. Any units or parts which prove defective during the warranty period will be replaced with OEM parts and transportation prepaid.

E. All parts shall be readily available locally in the United States.

1.7 COORDINATION

A. Coordinate size and location of all foundations, pit depth, pit size, lift location, supports, piping, electrical, and controls.

1.8 PRODUCT DELIVERY, STORAGE, AND HANDLING

A. Contractor shall coordinate delivery with manufacturer.

B. Deliver equipment in manufacturer's containers, appropriately packaged and/or crated for protection during domestic shipment and storage in humid or dusty conditions.

C. Indelibly label all containers, including those contained in others, on outside with item description(s) per title and Mark Number of this specification.

D. Provide equipment and materials specified complete in one shipment for each equipment item. Split or partial shipments are not permissible.

1.9 LABELING

A. Nameplate: Manufacturer shall securely attach in a prominent location on each major item of equipment a non-corrosive nameplate with stamped figures showing manufacturer's name, address, model number, serial number and pertinent utility or operating data.

B. A.L.I. label: Manufacturer shall securely attach the A.L.I. label of the Automotive Lift Institute.

C. Lifting capacity shall be painted with letters and numbers 3 inches high Minimum on both sides of lifting mast assembly.

E. All electrical equipment and materials shall be new and shall be listed by Underwriter's Laboratories, Inc. (U.L.), or other National Recognized Testing Laboratory (NRTL), in categories for which standards have been set by that agency and labeled as such in the manufacturer's plant.

PART 2 – PRODUCTS

2.3 LIFT, DRIVE-ON, WATERPROOF, 62,000 LB. CAPACITY, 30 FT - PROVIDED FOR INFORMATION PURPOSES ONLY
Equipment Mark Number: 5655

B. Description:

1. A vertical half-scissors heavy-duty platform lift to elevate large trucks, buses, and other heavy-duty vehicles for the purpose of inspection, maintenance, servicing and cleaning. Lift shall rise in a vertical fashion.
1. The lift system shall be flush mounted recessed as indicated on the drawings.
2. The lift system shall be totally open floor design with no obstructions between lifting platforms and no crossbeams either in the front or the rear of the platforms.
3. Lift system shall incorporate a hydraulic driven cylinder in each half scissor.
4. The maximum lifting height of the lift system shall be programmable to the height specifications as requested by user.
5. Lift shall have a complete LED lighting system installed on the inner edge to illuminate the work area when the vehicle is raised. The LED lighting shall be 24V, and rated IP 65.
6. Lift platforms shall be hot galvanized for wash bay applications.

C. Lifting capacity

1. The lift shall have a minimum nominal lifting capacity of: 62,000 lbs.

D. Dimensions

1. The lift shall have a minimum lifting height of 69 inches when the lift is flush mounted to the floor.
2. Platform length- 32 ft, 9 inches.
3. Width of the platforms for all models shall be 30 inches.
4. The lowered height shall be a maximum of 16 inches.

E. Drive mechanism

1. The drive system shall be hydraulic and shall permit lifting without any pulsation, jerks, or unsteady lifting. Lifting shall be smooth. The hydraulic power unit shall be an electrically-powered pump, flow control valves, and a fluid reservoir.
2. Hydraulic lifting cylinders shall be of a piston type to prevent leakage in the case of piston damage.

3. *All rotating axles shall be made of stainless steel.*

F. *Controls*

1. *Provide surface mounted controller installed and mounted to the equipment pad.*
2. *The lift operating system shall have microprocessor controls within the printed circuit board to provide various safety and operational requirements.*
3. *The lift system shall have all control voltage rated to a maximum of 24 VDC.*
4. *Each control box shall have as a minimum:*

    a. *System disconnect.*
    b. *"Power-on" pilot lamp.*
    c. *An "up" button*
    d. *A "down" button*
    e. *Lock release button*
    f. *If needed: Lighting switch*

5. *Control panel shall be constructed of stainless steel and be rated IP 65.*

6. *Electrical*

    a. *The lift shall accommodate a single point of connection to the controller. Provide all require transformers within the unit counsel.*

G. *Safety devices*

1. *An independent and fail-safe mechanical safety device shall be present on each half scissor. This safety device shall be totally independent from the lifting drive system. A locking catch shall be free to engage all of the teeth of the locking strip attached to the half scissor.*
2. *Each lifting device shall be provided with a position measuring device identified as an inclinometer whose function it is to calculate and synchronize the height of the 4 lifting devices.*
3. *The lift system shall incorporate a splash proof electrical system (IP 65) so that the lift can be used in a washroom environment without damage to electrical components.*
4. *The lift system shall have an automatic foot-guard protection.*
5. *Locking mechanism shall be activated in no less than 3 inches of lifting height*

H. Provide all electrical conduit, wiring, and compressed air tubing as required for complete installation of lift.

PART 3 - EXECUTION

3.1 INSPECTION

A. Coordinate location of rough-in work and utility stub-outs to assure match with equipment to be installed.

B. Inspect delivered equipment for damage from shipping and exposure to weather.

C. Compare delivered equipment with packing lists and specifications to assure receipt of all items.

3.2 INSTALLATION

A. Perform work under direct supervision of Foreman or Construction Superintendent with authority to coordinate installation of scheduled equipment with Architect.

B. Contractor to engage with a Manufacturer's Representative: Provide a qualified manufacturer's representative at site to supervise work related to equipment installation, check out and start up.

C. Install equipment in accordance with plans, shop drawings and manufacturer's instructions:

1. Provide all additional materials required for complete installation as indicated on manufacturer’s installation drawings
2. Positioning: Place equipment in accordance with any noted special positioning requirements generally level, plumb and at right angles to adjacent work.
3. Fitting: Where field cutting or trimming is necessary, perform in a neat, accurate, professional manner without damaging equipment or adjacent work.
4. Anchorage: Attach equipment securely to prevent damage resulting from inadequate fastenings. Installation fasteners shall be installed to avoid scratching or damaging adjacent surfaces.
5. Upon completion of work, finish surfaces shall be free of tool marks, scratches, blemishes, and stains.

3.3 TESTING

A. Perform tests and inspections.

1. Manufacturer's Field Service: Engage a factory-authorized service representative to start-up inspect, test, and adjust components, assemblies, and equipment installations, including connections, check operation of the equipment and components for operation and performance as specified and examine the finish for damage. Provide report in writing that the installation meets the requirements and shall include information concerning minor adjustments and minor repairs, which may be required before final acceptance by the Owner.
2. Test and adjust controls and safeties. Replace damaged and malfunctioning controls and equipment

B. Prepare test and inspection reports

C. After final connections are made, specified equipment shall be tested for compliance with all specified features in the presence of the Architect using acceptance procedures provided by the manufacturer.

3.4 CLEANUP

A. Touch-up damage to painted finishes.

B. Wipe and clean equipment of any oil, grease, and solvents, and make ready for use.

C. Clean area around equipment installation and remove packing or installation debris from job site.

D. Notify Architect for acceptance inspection.

3.5 TRAINING

A. Owner to engage a factory-authorized service representative to train Owner's maintenance personnel to adjust, operate, and maintain equipment.

B. Owner to direct the technical representative to provide specified hours of training to designated Owner's maintenance personnel in operation and maintenance of the following equipment. Coordinate, with Owner, training schedule and list of personnel to be trained.

1. LIFT, DRIVE-ON, WATERPROOF, 62,000 LB. CAPACITY, 30 FT
   Equipment Mark Number: 5655
   Hours Required: 2

C. Technical representative shall demonstrate lift operation utilizing each of the vehicle types operated by Owner.

D. Owner to obtain, from technical representative, a list of Owner's personnel trained in equipment operations and maintenance.

END OF SECTION 144500

DIVISION 22

SECTION 220500 - COMMON WORK RESULTS FOR PLUMBING

PART 1 - GENERAL

1.1 RELATED DOCUMENTS

A. Drawings and general provisions of the Contract, including General and Supplementary Conditions and Division 01 Specification Sections, apply to this Section.

1.2 SUMMARY

A. This Section includes the following:

1. Piping materials and installation instructions common to most piping systems.
2. Equipment installation requirements common to equipment sections.

1.3 DEFINITIONS

A. Finished Spaces: Spaces other than mechanical and electrical equipment rooms, furred spaces, pipe chases, unheated spaces immediately below roof, spaces above ceilings, unexcavated spaces, crawlspaces, and tunnels.

B. Exposed, Interior Installations: Exposed to view indoors. Examples include finished occupied spaces and mechanical equipment rooms.

C. Exposed, Exterior Installations: Exposed to view outdoors or subject to outdoor ambient temperatures and weather conditions. Examples include rooftop locations.

D. Concealed, Interior Installations: Concealed from view and protected from physical contact by building occupants. Examples include above ceilings and in chases.

E. Concealed, Exterior Installations: Concealed from view and protected from weather conditions and physical contact by building occupants but subject to outdoor ambient temperatures. Examples include installations within unheated shelters.

F. The following are industry abbreviations for plastic materials:

1. ABS: Acrylonitrile-butadiene-styrene plastic.
2. CPVC: Chlorinated polyvinyl chloride plastic.
3. PE: Polyethylene plastic.
4. PVC: Polyvinyl chloride plastic.

G. The following are industry abbreviations for rubber materials:

1. EPDM: Ethylene-propylene-diene terpolymer rubber.
2. NBR: Acrylonitrile-butadiene rubber.

1.4 DELIVERY, STORAGE, AND HANDLING

A. Deliver pipes and tubes with factory-applied end caps. Maintain end caps through shipping, storage, and handling to prevent pipe end damage and to prevent entrance of dirt, debris, and moisture.

1.5 COORDINATION

A. Arrange for pipe spaces, chases, slots, and openings in building structure during progress of construction, to allow for plumbing installations.

B. Coordinate installation of required supporting devices and set sleeves in poured-in-place concrete and other structural components as they are constructed.

PART 2 - PRODUCTS

2.1 MANUFACTURERS

A. In other Part 2 articles where subparagraph titles below introduce lists, the following requirements apply for product selection:

1. Performance: The product shall meet the listed performance specifications.

2.2 PIPE, TUBE, AND FITTINGS

A. Refer to individual Division 22 piping Sections for pipe, tube, and fitting materials and joining methods.

2.3 JOINING MATERIALS

A. Refer to individual Division 22 piping Sections for special joining materials not listed below.

2.4 TRANSITION FITTINGS

A. AWWA Transition Couplings: Same size as, and with pressure rating at least equal to and with ends compatible with, piping to be joined.

1. Underground Piping NPS 1-1/2 and Smaller: Manufactured fitting or coupling.
2. Underground Piping NPS 2 and Larger: AWWA C219, metal sleeve-type coupling.
3. Aboveground Pressure Piping: Pipe fitting.

B. Flexible Transition Couplings for Underground Nonpressure Drainage Piping: ASTM C 1173 with elastomeric sleeve, ends same size as piping to be joined, and corrosion-resistant metal band on each end.

2.5 SLEEVES

A. Galvanized-Steel Sheet: 0.0239-inch minimum thickness; round tube closed with welded longitudinal joint.

B. Steel Pipe: ASTM A 53, Type E, Grade B, Schedule 40, galvanized, plain ends.

C. Cast Iron: Cast or fabricated "wall pipe" equivalent to ductile-iron pressure pipe, with plain ends and integral waterstop, unless otherwise indicated.

PART 3 - EXECUTION

3.1 PIPING SYSTEMS - COMMON REQUIREMENTS

A. Install piping according to the following requirements and Division 22 Sections specifying piping systems.

B. Drawing plans, schematics, and diagrams indicate general location and arrangement of piping systems. Indicated locations and arrangements were used to size pipe and calculate friction loss, expansion, pump sizing, and other design considerations. Install piping as indicated unless deviations to layout are approved on Coordination Drawings.

C. Install piping in concealed locations, unless otherwise indicated and except in equipment rooms and service areas.

D. Install piping indicated to be exposed and piping in equipment rooms and service areas at right angles or parallel to building walls. Diagonal runs are prohibited unless specifically indicated otherwise.

E. Install piping at slopes indicated on the drawings. If not specified slope piping as required by the plumbing code.

F. Install piping free of sags and bends.

G. Install fittings for changes in direction and branch connections.

H. Select system components with pressure rating equal to or greater than system operating pressure.

I. Sleeves are not required for core-drilled holes.

J. Permanent sleeves are not required in floors for holes formed by removable sleeves.

K. Install sleeves for pipes passing through concrete and masonry walls and concrete floor and roof slabs.

L. Install sleeves for pipes passing through concrete and masonry walls, gypsum-board partitions, and concrete floor and roof slabs.

1. Cut sleeves to length for mounting flush with both surfaces.

a. Exception: Extend sleeves installed in floors of mechanical equipment areas or other wet areas 2 inches above finished floor level. Extend cast-iron sleeve fittings below floor slab as required to secure clamping ring if ring is specified.

2. Install sleeves in new walls and slabs as new walls and slabs are constructed.
3. Install sleeves that are large enough to provide 1/4-inch annular clear space between sleeve and pipe or pipe insulation. Use the following sleeve materials:

a. Steel Pipe Sleeves: For pipes smaller than NPS 6.
b. Steel Sheet Sleeves: For pipes NPS 6 and larger, penetrating gypsum-board partitions.
c. Stack Sleeve Fittings: For pipes penetrating floors with membrane waterproofing. Secure flashing between clamping flanges. Install section of cast-iron soil pipe to extend sleeve to 2 inches above finished floor level. Refer to Division 076200 Section "Sheet Metal Flashing and Trim" for flashing.

1) Seal space outside of sleeve fittings with grout.

M. Underground, Exterior-Wall Pipe Penetrations: Install cast-iron "wall pipes" for sleeves. Seal pipe penetrations using mechanical sleeve seals. Select sleeve size to allow for 1-inch annular clear space between pipe and sleeve for installing mechanical sleeve seals.

1. Mechanical Sleeve Seal Installation: Select type and number of sealing elements required for pipe material and size. Position pipe in center of sleeve. Assemble mechanical sleeve seals and install in annular space between pipe and sleeve. Tighten bolts against pressure plates that cause sealing elements to expand and make watertight seal.

N. Verify final equipment locations for roughing-in.

O. Refer to equipment specifications in other Sections of these Specifications for roughing-in requirements.

3.2 PIPING JOINT CONSTRUCTION

A. Join pipe and fittings according to the following requirements and Division 22 Sections specifying piping systems.

B. Ream ends of pipes and tubes and remove burrs. Bevel plain ends of steel pipe.

C. Remove scale, slag, dirt, and debris from inside and outside of pipe and fittings before assembly.

D. Soldered Joints: Apply ASTM B 813, water-flushable flux, unless otherwise indicated, to tube end. Construct joints according to ASTM B 828 or CDA's "Copper Tube Handbook," using lead-free solder alloy complying with ASTM B 32.

E. Threaded Joints: Thread pipe with tapered pipe threads according to ASME B1.20.1. Cut threads full and clean using sharp dies. Ream threaded pipe ends to remove burrs and restore full ID. Join pipe fittings and valves as follows:

1. Apply appropriate tape or thread compound to external pipe threads unless dry seal threading is specified.
2. Damaged Threads: Do not use pipe or pipe fittings with threads that are corroded or damaged. Do not use pipe sections that have cracked or open welds.

F. Welded Joints: Construct joints according to AWS D10.12, using qualified processes and welding operators according to Part 1 "Quality Assurance" Article.

G. Flanged Joints: Select appropriate gasket material, size, type, and thickness for service application. Install gasket concentrically positioned. Use suitable lubricants on bolt threads.

3.3 PIPING CONNECTIONS

A. Make connections according to the following, unless otherwise indicated:

1. Install unions, in piping NPS 2 and smaller, adjacent to each valve and at final connection to each piece of equipment.
2. Install flanges, in piping NPS 2-1/2 and larger, adjacent to flanged valves and at final connection to each piece of equipment.
3. Dry Piping Systems: Install dielectric unions and flanges to connect piping materials of dissimilar metals.
4. Wet Piping Systems: Install dielectric coupling and nipple fittings to connect piping materials of dissimilar metals.

3.4 EQUIPMENT INSTALLATION - COMMON REQUIREMENTS

A. Install equipment to allow maximum possible headroom unless specific mounting heights are indicated.

B. Install equipment level and plumb, parallel and perpendicular to other building systems and components in exposed interior spaces, unless otherwise indicated.

C. Install plumbing equipment to facilitate service, maintenance, and repair or replacement of components. Connect equipment for ease of disconnecting, with minimum interference to other installations. Extend grease fittings to accessible locations.

D. Install equipment to allow right of way for piping installed at required slope.

END OF SECTION 220500

SECTION 221316 - SANITARY WASTE AND VENT PIPING

PART 1 - GENERAL

1.1 RELATED DOCUMENTS

A. Drawings and general provisions of the Contract, including General and Supplementary Conditions and Division 01 Specification Sections, apply to this Section.

1.2 SUMMARY

A. Section Includes:
   1. Pipe, tube, and fittings.
   2. Specialty pipe fittings.

1.3 PERFORMANCE REQUIREMENTS

A. Components and installation shall be capable of withstanding the following minimum working pressure unless otherwise indicated:
   1. Soil, Waste, and Vent Piping: 10-foot head of water.

1.4 ACTION SUBMITTALS

A. Product Data: For each type of product indicated.
B. Provide piping schedule indicating type of intended installation and installation location. Refer to piping schedule below.

1.5 PROJECT CONDITIONS

A. Interruption of Existing Sanitary Waste Service: Do not interrupt service to facilities occupied by Owner or others unless permitted under the following conditions and then only after arranging to provide temporary service according to requirements indicated:
   1. Notify Construction Manager no fewer than three working days in advance of proposed interruption of sanitary waste service.
   2. Do not proceed with interruption of sanitary waste service without Construction Manager's written permission.

PART 2 - PRODUCTS

2.1 PIPING MATERIALS

A. Comply with requirements in "Piping Schedule" Article for applications of pipe, tube, fitting materials, and joining methods for specific services, service locations, and pipe sizes.

2.2 HUB-AND-SPIGOT, CAST-IRON SOIL PIPE AND FITTINGS

A. Pipe and Fittings: ASTM A 74, Service class.
   1. Manufacturers: Subject to compliance with requirements, provide products by one of the following:
      a. Charlotte Pipe and Foundry.
      b. AB&I Foundry.

c. Tyler Pipe.

2. Gaskets: ASTM C 564, rubber.

2.3 HUBLESS, CAST-IRON SOIL PIPE AND FITTINGS

A. Pipe and Fittings: ASTM A 888 or CISPI 301.

1. Manufacturers: Subject to compliance with requirements, provide products by one of the following:

a. Charlotte Pipe and Foundry.
b. AB&I Foundry.
c. Tyler Pipe.

B. Heavy-Duty, Hubless-Piping Couplings:

1. Manufacturers: Subject to compliance with requirements, provide products by one of the following:

a. ANACO-Husky.
b. Clamp-All Corp.
c. Mission Rubber Company; a division of MCP Industries, Inc.
d. Tyler Pipe.

2. Standards: ASTM C 1277 and ASTM C 1540.
3. Description: Stainless-steel shield with stainless-steel bands and tightening devices; and ASTM C 564, rubber sleeve with integral, center pipe stop.

2.4 CLEANOUTS

A. Exposed Metal Cleanouts:

1. ASME A112.36.2M, Cast-Iron Cleanouts:

a. Manufacturers: Subject to compliance with requirements, provide products by one of the following:

1) MIFAB, Inc.
2) Smith, Jay R. Mfg. Co.
3) Watts Drainage Products.
4) Zurn Plumbing Products Group.

2.5 SPECIALTY PIPE FITTINGS

A. Transition Couplings:

1. General Requirements: Fitting or device for joining piping with small differences in OD's or of different materials. Include end connections same size as and compatible with pipes to be joined.
2. Fitting-Type Transition Couplings: Manufactured piping coupling or specified piping system fitting.
3. Shielded, Nonpressure Transition Couplings:

a. Manufacturers: Subject to compliance with requirements, provide products by one of the following:

1) Cascade Waterworks Mfg. Co.
2) Mission Rubber Company; a division of MCP Industries, Inc.

b. Standard: ASTM C 1460.

c. Description: Elastomeric or rubber sleeve with full-length, corrosion-resistant outer shield and corrosion-resistant-metal tension band and tightening mechanism on each end.

4. Pressure Transition Couplings:
   a. Manufacturers: Subject to compliance with requirements, provide products by one of the following:
      1) Cascade Waterworks Mfg. Co.
      2) Dresser, Inc.
      3) Smith-Blair, Inc.; a Sensus company.
      4) The Ford Meter Box Company, Inc.
      5) Viking Johnson.
   b. Standard: AWWA C219.
   c. Description: Metal, sleeve-type same size as, with pressure rating at least equal to, and ends compatible with, pipes to be joined.
   d. Center-Sleeve Material: Manufacturer's standard.
   e. Gasket Material: Natural or synthetic rubber.
   f. Metal Component Finish: Corrosion-resistant coating or material.

PART 3 - EXECUTION

3.1 EARTH MOVING

A. Comply with requirements for excavating, trenching, and backfilling specified in Section 312316 – “Excavation” and Section 312323 "Fill".

3.2 PIPING INSTALLATION

A. Drawing plans, schematics, and diagrams indicate general location and arrangement of piping systems. Indicated locations and arrangements were used to size pipe and calculate friction loss, expansion, pump sizing, and other design considerations. Install piping as indicated unless deviations to layout are approved on coordination drawings.
B. Install piping in concealed locations unless otherwise indicated and except in equipment rooms and service areas.
C. Install piping indicated to be exposed and piping in equipment rooms and service areas at right angles or parallel to building walls. Diagonal runs are prohibited unless specifically indicated otherwise.
D. Install piping at indicated slopes.
E. Install piping free of sags and bends.
F. Install fittings for changes in direction and branch connections.
G. Make changes in direction for soil and waste drainage and vent piping using appropriate branches, bends, and long-sweep bends. Sanitary tees and short-sweep 1/4 bends may be used on vertical stacks if change in direction of flow is from horizontal to vertical. Use long-turn, double Y-branch and 1/8-bend fittings if two fixtures are installed back to back or side by side with common drain pipe. Straight tees, elbows, and crosses may be used on vent lines. Do not change direction of flow more than 90 degrees. Use proper size of standard increasers and reducers if pipes of different sizes are connected. Reducing size of drainage piping in direction of flow is prohibited.
H. Lay buried building drainage piping beginning at low point of each system. Install true to grades and alignment indicated, with unbroken continuity of invert. Place hub ends of piping

upstream. Install required gaskets according to manufacturer's written instructions for use of lubricants, cements, and other installation requirements. Maintain swab in piping and pull past each joint as completed.

I. Install soil and waste drainage and vent piping at the following minimum slopes unless otherwise indicated:
   1. Building Sanitary Drain: 2 percent downward in direction of flow for piping NPS 3 and smaller; 1 percent downward in direction of flow for piping NPS 4 and larger.
   2. Horizontal Sanitary Drainage Piping: 2 percent downward in direction of flow.
   3. Vent Piping: 1 percent down toward vertical fixture vent or toward vent stack.

J. Install cast-iron soil piping according to CISPI's "Cast Iron Soil Pipe and Fittings Handbook," Chapter IV, "Installation of Cast Iron Soil Pipe and Fittings."
   1. Install encasement on underground piping according to ASTM A 674 or AWWA C105/A 21.5.

K. Install engineered soil and waste drainage and vent piping systems as follows:
   1. Combination Waste and Vent: Comply with standards of authorities having jurisdiction.

L. Plumbing Specialties:
   1. For floor cleanouts for piping below floors, install cleanout deck plates with top flush with finished floor.

M. Do not enclose, cover, or put piping into operation until it is inspected and approved by authorities having jurisdiction.

N. Install sleeves for piping penetrations of walls, ceilings, and floors.

O. Install sleeve seals for piping penetrations of concrete walls and slabs.

P. Install escutcheons for piping penetrations of walls and ceilings.

3.3 JOINT CONSTRUCTION

A. Join hub-and-spigot, cast-iron soil piping with gasket joints according to CISPI's "Cast Iron Soil Pipe and Fittings Handbook" for compression joints.

B. Join hubless, cast-iron soil piping according to CISPI 310 and CISPI's "Cast Iron Soil Pipe and Fittings Handbook" for hubless-piping coupling joints.

3.4 SPECIALTY PIPE FITTING INSTALLATION

A. Transition Couplings:
   1. Install transition couplings at joints of piping with small differences in OD's.
   2. In Drainage Piping: Shielded, nonpressure transition couplings.

B. Dielectric Fittings:
   1. Install dielectric fittings in piping at connections of dissimilar metal piping and tubing.
   2. Dielectric Fittings for NPS 2 and Smaller: Use dielectric nipples or unions.
   3. Dielectric Fittings for NPS 2-1/2 to NPS 6: Use dielectric flange kits or nipples.

3.5 HANGER AND SUPPORT INSTALLATION

A. Comply with requirements for pipe hanger and support devices.
   1. Install carbon-steel pipe hangers for horizontal piping in noncorrosive environments.
   2. Install carbon-steel pipe support clamps for vertical piping.
   3. Install stainless-steel pipe support clamps for vertical piping in corrosive environments.
   4. Vertical Piping: MSS Type 8 or Type 42, clamps.

5. Install individual, straight, horizontal piping runs:
   a. 100 Feet and Less: MSS Type 1, adjustable, steel clevis hangers.
   b. Longer Than 100 Feet: MSS Type 43, adjustable roller hangers.
   c. Longer Than 100 Feet if Indicated: MSS Type 49, spring cushion rolls.
6. Multiple, Straight, Horizontal Piping Runs 100 Feet or Longer: MSS Type 44, pipe rolls. Support pipe rolls on trapeze.
7. Base of Vertical Piping: MSS Type 52, spring hangers.

B. Support horizontal piping and tubing within 12 inches of each fitting and coupling.
C. Support piping and tubing not listed above according to MSS SP-69 and manufacturer's written instructions.

3.6 CONNECTIONS

A. Drawings indicate general arrangement of piping, fittings, and specialties.
B. Connect soil and waste piping to exterior sanitary sewerage piping. Use transition fitting to join dissimilar piping materials.
C. Connect drainage and vent piping to the following:
   1. Plumbing Specialties: Connect drainage and vent piping in sizes indicated, but not smaller than required by plumbing code.
D. Where installing piping adjacent to equipment, allow space for service and maintenance of equipment.

3.7 FIELD QUALITY CONTROL

A. During installation, notify authorities having jurisdiction at least 48 hours before inspection must be made. Perform tests specified below in presence of authorities having jurisdiction.
   1. Roughing-in Inspection: Arrange for inspection of piping before concealing or closing-in after roughing-in.
   2. Final Inspection: Arrange for final inspection by authorities having jurisdiction to observe tests specified below and to ensure compliance with requirements.
B. Reinspection: If authorities having jurisdiction find that piping will not pass test or inspection, make required corrections and arrange for reinspection.
C. Reports: Prepare inspection reports and have them signed by authorities having jurisdiction.
D. Test sanitary drainage and vent piping according to procedures of authorities having jurisdiction or, in absence of published procedures, as follows:
   1. Test for leaks and defects in new piping and parts of existing piping that have been altered, extended, or repaired. If testing is performed in segments, submit separate report for each test, complete with diagram of portion of piping tested.
   2. Leave uncovered and unconcealed new, altered, extended, or replaced drainage and vent piping until it has been tested and approved. Expose work that was covered or concealed before it was tested.
   3. Roughing-in Plumbing Test Procedure: Test drainage and vent piping except outside leaders on completion of roughing-in. Close openings in piping system and fill with water to point of overflow, but not less than 10-foot head of water. From 15 minutes before inspection starts to completion of inspection, water level must not drop. Inspect joints for leaks.
   4. Repair leaks and defects with new materials and retest piping, or portion thereof, until satisfactory results are obtained.

5. Prepare reports for tests and required corrective action.

3.8 CLEANING AND PROTECTION

A. Clean interior of piping. Remove dirt and debris as work progresses.
B. Protect drains during remainder of construction period to avoid clogging with dirt and debris and to prevent damage from traffic and construction work.
C. Place plugs in ends of uncompleted piping at end of day and when work stops.

3.9 PIPING SCHEDULE

A. Underground, soil, waste, and vent piping shall be the following:
   1. Service class, cast-iron soil piping; gaskets; and gasketed joints for piping upstream of grease interceptors.
   2. Dissimilar Pipe-Material Couplings: Shielded, nonpressure transition couplings.

END OF SECTION 221316

DIVISION 26

SECTION 260500 – COMMON WORK RESULTS FOR ELECTRICAL

PART 1 - GENERAL

1.1 GENERAL REQUIREMENTS

A. Drawings and general provisions of the Contract, including General and Supplementary Conditions and Division 01 Specification Sections, apply to this Section.

B. Examine all other Sections of the Specifications for requirements that affect work under this Section whether or not such work is specifically mentioned in this Section.

C. Coordinate work with that of all other trades affecting, or affected by work of this Section. Cooperate with such trades to assure the steady progress of all work under the Contract.

1.2 SUMMARY

A. Section Includes:

1. Electrical equipment coordination and installation.
2. Common electrical installation requirements.
3. Firestopping
4. Electrical Testing
5. Requirements which apply to all Electrical Work

B. The requirements indicated in this specification section shall apply to all Electrical Work (including, but not limited to, all work performed under Division 26, 27, and 28 if required under the scope of this project)

1.3 COORDINATION

A. Coordinate arrangement, mounting, and support of electrical equipment:

1. To allow maximum possible headroom unless specific mounting heights that reduce headroom are indicated.
2. To provide for ease of disconnecting the equipment with minimum interference to other installations.
3. To allow right of way for piping and conduit installed at required slope.
4. So connecting raceways, cables, wireways, cable trays, and busways will be clear of obstructions and of the working and access space of other equipment.

B. Coordinate installation of required supporting devices and set sleeves in cast-in-place concrete, masonry walls, and other structural components as they are constructed.

1.4 REFERENCES AND DEFINITIONS

A. Basic References: The following codes, standards, and approvals as referenced throughout the drawings and specifications, shall serve as the minimum standards and quality requirements directly appropriate to the work and workmanship. References to catalogs, standards, codes, specifications and recommendations, etc., means latest edition of such publications in effect at the date of invitation to submit bid.

1. American National Standards Institute (ANSI): ANSI C2; National Electrical Safety Code
2. National Electric Manufacturer's Association (NEMA) Standards as apply to specified Products.
3. National Fire Protection Association (NFPA):
   a. NFPA 70 (National Electrical Code)
   b. NFPA 72 (National Fire Alarm Code)
   c. NFPA 70E (Standard for Electrical Safety Requirements for Employee Workplaces), and other applicable NFPA codes
4. Underwriters' Laboratories, Inc. (UL) Listings, Labels, and Approvals shall govern the quality and performance of specified Products.
5. Americans with Disabilities Act (ADA)
6. Institute of Electrical and Electronics Engineers, Inc (IEEE)
7. National Electrical Contractor’s Association (NECA)
8. International Electrical Testing Association (NETA)
9. Occupational Safety and Health Administration (OSHA)

B. Definitions:

1. “Provide” - means “furnish and install”
2. “Indicated” - means “indicated in contract documents”
3. “Concealed” - means items referred to are hidden from normal sight, this includes items partly excavated or crawl spaces and in service tunnels used solely for repairs and maintenance
4. “Exposed” - means items are not “concealed”
5. “Feeder” - means “All circuit conductors between the service equipment, the source of a separately derived system, or other power supply source and the final branch-circuit overcurrent device”
6. “Feeder circuit breakers” - means circuit breakers protecting feeders.
7. NETA ATS - International Electrical Testing Association Acceptance Testing Specifications, Latest Edition
8. “Building” – A structure that stands alone or that is cut off from adjoining structures by fire walls with all openings therein protected by approved fire doors
9. “degrees C” – means “degrees Celsius”
10. “degrees F” – means “degrees Fahrenheit”
11. “homerun” – This word shall refer to that portion of the electrical circuit wiring and conduit between the circuit breaker or fuse protecting the electrical circuit, and the first equipment or load on the electric circuit. There is no other equipment or load on the electrical circuit between the first equipment or load, and the circuit breaker or fuse. For example, a 120V, 20A circuit breaker feeds #12 AWG wiring which connects to 3 – NEMA 5-20R receptacles. The wiring and conduit that runs from the circuit breaker to

the 1st receptacle is considered the homerun wiring and conduit. There is no other receptacle on the electrical circuit between the 1st receptacle and the circuit breaker.

12. "Branch circuit" – means "The circuit conductors between the final overcurrent device protecting the circuit and the outlets(s)."
13. "Suspended ceiling" – Suspended ceiling (sometimes referred to as dropped ceiling or false ceiling) is a secondary ceiling suspended or supported from the building structure above, creating a void between the underside of the building structure and the top of the suspended ceiling. Suspended ceilings include, but are not limited to, grid type ceilings, gypsum board ceilings, drywall type ceilings, and other ceilings which are located below the building structure. Suspended ceilings are either accessible ceilings (including, but not limited to, grid type ceilings with removable ceiling panels or tiles) or non-accessible ceilings (including, but not limited to, gypsum board ceilings and drywall type ceilings).
14. "Equipment" shall include, but not be limited to, fittings, devices, appliances, luminaires, apparatus, machinery, and the like used as a part of, or in connection with, an electrical installation.
15. "Smoke duct detector" and "duct smoke detector" shall have the same meaning. Both terms shall mean smoke detectors which are used to detect smoke in HVAC (Heating, Ventilation, and Air Conditioning) ducts.
16. "Breaker" – means "circuit breaker"

1.5 BASIS OF DESIGN

A. The contract documents are prepared on basis of one manufacturer as "design equipment," even though other manufacturers' names are listed as acceptable makes. If Contractor elects to use one of the listed makes other than "design equipment," submit detailed drawings, indicating proposed installation of equipment. Show maintenance clearances, service removal space required, and other pertinent revisions to the design arrangement. Make required changes in the work of other trades, at no increase in any contract. Provide larger electrical feeders, circuit breakers, equipment, additional control devices and other miscellaneous equipment required for proper operation, and assume responsibility for proper location of rough-in and connections by other trades. Remove and replace door frames, access doors, walls ceilings or floors required to install other than design make equipment. If revised arrangement submittal is rejected, revise and resubmit specified "design equipment" item which conforms to contract documents.

1.6 INTENT OF DRAWINGS

A. The drawings are diagrammatic, unless detailed dimensioned drawings are included. Drawings show approximate locations of equipment, fixtures, panelboards, conduits, and wiring devices. Exact locations are subject to the approval of the Owner's Representative. The general run of electrical feeders, branch circuits, and conduits, indicated on the drawings, is not intended to be the exact routing. Circuit designations, in the form of "Home Runs" on branches, indicate the designation of the branch circuit, the size and the quantity of branch circuit conductors, and the panelboard or interconnection box from which the branch circuit is served.

1.7 COORDINATION DRAWINGS

A. Where the contract documents require coordination drawings; or, where the contractor has any question or request-for-information that relates to locations of equipment, or coordination of

equipment locations, the contractor shall provide a coordination drawing. The coordination drawing shall have reflected ceiling plans, structural plans, floor plans and other relevant drawings, drawn to scale on one drawing, on which the following items are shown and coordinated with each other, based on actual dimensions of the items, input from actual installer of the items involved, and existing conditions (the contractor shall field measure all existing conditions).

1.8 AS-BUILT DRAWINGS

A. The contractor shall provide "as-built" drawings, in both electronic and hardcopy formats. The contractor shall provide accurate project record drawings, showing in red color on the working drawings and electrical drawings, all changes, modifications, and alterations from the original drawings, made during installation of the work. Upon completion of the work, the contractor shall provide the Owner with a USB drive that has an electronic copy of the project record drawings, and a full size hardcopy of the project record drawings.

1.9 OPERATING AND MAINTENANCE MANUALS

A. General: Upon completion of the work, the Contractor shall furnish Operating and Maintenance Manuals for use by the Owner. The manuals shall include operating and maintenance information on all systems and items of equipment. The data shall consist of catalogs, brochures, bulletins, charts, schedules and drawings describing location, operation, maintenance, lubrication, operating weight and other information necessary for the Owner to establish an effective operating and maintenance program.

B. Shop Drawings: Copies of appropriate shop drawings shall be included in the Operating and Maintenance Manuals. The requirements for manuals is a separate contractual item and in no way supersedes the requirements for shop drawings and vice-versa.

C. Approval: Completed manuals shall be submitted to the Engineer for review and approval. Incomplete or inadequate manuals will be returned to the Contractor for correction and resubmission.

D. Provide an electronic copy (PDF format) on 3 USB drives, and 3 hardcopies in 3-ring binders, of all operating and maintenance manuals, unless a greater quantity is specified elsewhere in the contract documents, in which case the greater quantity shall apply. Each drive and each hardcopy shall have all the operating and maintenance manuals for all the equipment.

E. Equipment keys and passwords shall be provided to the Owner's authorized representative or representatives. A document shall be provided indicating who received the keys and what are the passwords. Document shall be neat and typewritten.

F. Provide a separate section in the O&M Manuals for maintenance testing schedules of all equipment. A factory authorized representative of the equipment manufacturer shall certify the maintenance program. Include calendar schedule in table format to indicate all maintenance actions included during the warranty period with spaces for future testing.

G. All factory and field test reports by the contractor, manufacturer, and/or independent testing company shall be included in the O&M Manuals.

H. Wiring diagrams for all factory and field wiring shall be included in the O&M Manuals.

I. A complete list of spare parts and accessories for equipment shall be provided.

1.10 DELIVERY, STORAGE, AND HANDLING

A. Deliver materials and equipment to the Project site in a clean condition with openings plugged or capped (or otherwise sealed by packaging) both during shipping and during temporary storage.

B. Delivered electrical equipment crating and/or packaging shall clearly identify pick-points or lift-points. In the absence of crating or packaging, pick-points or lift-points must be identified on the equipment.

C. When unloading materials and equipment provide special lifting harness or apparatus as may be required by manufacturers. Handle materials and equipment in accordance with manufacturer's written instructions.

D. The Contractor shall determine the required equipment needed for unloading operations and have such equipment on site to perform unloading work on the date of equipment delivery.

E. Store materials and equipment, both on and off site, in accordance with manufacturer's written instructions. Keep equipment in a dry location.

1. Temporary Heating: Apply temporary heat to materials and equipment, according to manufacturer's written instructions, throughout periods when environment is not controlled for temperature and humidity within manufacturer's stipulated service conditions.

1.11 WARRANTY

A. The Contractor shall guarantee that all work performed, and all materials/equipment installed by him, are free from defects. The Contractor shall repair or replace any defective equipment, materials or workmanship, free of cost to the Owner, for a period of two (2) years from the date of final acceptance of the Contractor’s work. The date of final acceptance is determined by the Owner. Where requirements indicated elsewhere in the contract documents (including, but not limited to, individual specification sections) indicate a Warranty period longer than two (2) years, the longer warranty period shall apply.

B. During this warranty period the Contractor shall:

1. Correct and make good all electrical defects. Faulty equipment and materials shall be repaired or replaced as required to produce satisfactory results as directed by the engineer and without additional cost to the Owner. Contractor shall provide service within 24 hours after the call has been made by the Owner.

1.12 DAMAGE TO OTHER WORK

A. Damage: Cutting or damage to existing structures, surfaces or installations shall be repaired at the expense of the Contractor. All such repairs or patching shall be neatly done by mechanics of the appropriate trade, and shall be done in such a fashion as to leave no readily apparent joint or change in appearance, and to leave no structural or other weakness.

1.13 CONTRACTOR'S CERTIFICATION

A. The Contractor shall submit a signed and dated letter to the owner and the engineer certifying the following:

1. Electrical Contractor shall certify that all work has been performed in accordance with the contract documents (including, but not limited to: any amendments, addendums, and contract modifications) ;
2. Electrical Contractor shall certify that all work has been inspected and approved by the Authorities Having Jurisdiction; AND,
3. Electrical Contractor shall certify that all work has been performed in accordance with the National Electrical Code and all applicable codes.

1.14 BUY AMERICA ACT COMPLIANCE LETTER

A. All equipment provided in the project shall comply with the Buy America Act. In addition to requirements stated elsewhere in the contract documents, the manufacturer of each equipment shall provide a signed/dated letter which states that all products/equipment being provided by him, comply with the Buy America Act. Please note that requirements stated elsewhere in the contract documents, may require that the manufacturer provides other submittals in addition to the letter required by this specification section. The manufacturer shall provide the submittals required by this specification section, and the submittals required elsewhere in the contract documents.

1.15 ABSENCE OF SPECIFICATION

A. Where the drawings or the specifications do not name a particular brand or manufacturer of any item, these items are still part of the Work. This Contractor shall provide all such items that may be fairly and reasonably judged throughout the construction industry to be the most appropriate and best quality item for the intended application. Provide submittals for proposed items to the Architect for review and approval.

1.16 DISCREPANCY IN DRAWINGS AND/OR SPECIFICATIONS

A. Where the drawings and/or the specifications pose a conflict in design intent requirements, quality of work, or equipment the contractor must submit an RFI for clarification during the bid process in compliance with the front end specifications to provide resolution or provide the greater of the conflicting equipment or workmanship after the submission of bid, or cutoff date for RFI's.

PART 2 - PRODUCTS – *Not Used*

PART 3 - EXECUTION

3.1 COMMON REQUIREMENTS FOR ELECTRICAL INSTALLATION

A. Comply with NECA 1.

B. Measure indicated mounting heights to bottom of unit for suspended items and to center of unit for wall-mounting items.

C. Headroom Maintenance: If mounting heights or other location criteria are not indicated, arrange and install components and equipment to provide maximum possible headroom consistent with these requirements.

D. Equipment: Install to facilitate service, maintenance, and repair or replacement of components of both electrical equipment and other nearby installations. Connect in such a way as to facilitate future disconnecting with minimum interference with other items in the vicinity.

E. Right of Way: Give to piping systems installed at a required slope.

F. Workmanship: Workmanship shall be of the highest grade and all installation work shall be performed by thoroughly qualified mechanics of the appropriate trade. All equipment shall be installed and connected in accordance with the best engineering practice. Manufacturer’s instructions and recommendations shall be followed and all electric connections shall be provided.

G. Completeness: The Contractor shall furnish and install all labor, materials, tools, equipment, programming, software, startup, licenses, and services as required to make all equipment complete and fully operational. Provide all required mounting hangers, supports, hardware and accessories to install all equipment and devices. Make all equipment and devices complete and fully operational.

H. Drawings: The drawings showing the layout of the electrical system indicate approximate locations of outlets, apparatus and equipment. The runs of feeders and branches as shown, the drawings are schematic only and are not intended to show the exact routing and location of conduits and conduit terminations. The final determination as to routing, location and termination shall be governed by structural conditions, obstructions and job conditions. This shall not be construed to mean that the design of the system may be changed without the written approval of the Engineer; it merely refers to the exact run of raceways and the exact placement of outlets, etc. It shall be the Contractor's responsibility to obtain all shop drawings affecting conduit terminations to the equipment specified in this or other sections or furnished by others, and to verify conduit locations before installation. The Contractor shall consult all contract drawings and specifications which may affect the location of any outlet, equipment or conduit run, to avoid improper locations of such items and to avoid interference with other trades.

I. Accessibility: Electrical equipment such as junction and pull boxes, panelboards, switches, controls, and other apparatus that may require maintenance or operation from time to time, shall be made easily accessible. Although the equipment may be shown on the drawings in certain

locations, in the course of building construction, it may develop that such locations do not afford proper accessibility, in which case the Contractor shall direct the Engineer's attention to the condition before advancing the construction.

J. Site examinations: All bidders, prior to submitting a bid, shall thoroughly acquaint themselves with the conditions under which the work will be performed. No allowance shall be made subsequently in connection with this, for any error or negligence on the contractor's part.

K. Unless noted as "EXISTING", "BY OTHERS" or "NIC", all work, devices and equipment are new and shall be furnished and installed by the contractor.

L. The contractor shall comply with all the requirements indicated in the contract documents. The contractor shall provide all the items indicated in the contract documents, without any additional cost or time extension, regardless of whether or not the item is a special order, the item is in short supply, the item has a minimum quantity order requirement, the item has a long lead time, and/or the item has additional/non-standard costs associated with it. The contractor shall coordinate with the manufacturer and supplier of the item prior to submitting a bid.

M. Furnish and install devices and equipment in accordance with the NEC, the manufacturer's recommendations, and the contract documents.

N. All devices and equipment shall be suitable for its intended use, environment, and location in accordance with the NEC, UL, the manufacturer's recommendations and the contract documents.

O. All work shall be coordinated with the General, and all other trades Contractors.

P. Wire lugs, connectors and splices shall be UL Listed and shall be compatible with the wire size/material/type. Coordinate equipment and wiring to ensure that they are compatible with each other.

Q. Do not exceed the maximum wire pulling tension recommended by the wire manufacturer. Coordinate with the wire manufacturer as required. Pull wire through handholes, manholes, and other underground structures in a manner that shall minimize the pulling tension on the wire.

R. Prior to installing the equipment, the contractor shall field survey and verify the exact locations where the equipment are being installed, and shall notify the engineer immediately if there are any issues or conflicts. Also, prior to installing the equipment, the contractor shall coordinate the exact location of the equipment with the engineer, whether or not there are any issues or conflicts. Prior to installing the equipment, the contractor shall adjust the exact locations of the equipment, in accordance with the direction provided by the engineer

S. Mounting heights indicated in the Contract Documents are measured from the finished floor or finished grade to the bottom of the equipment, unless otherwise noted.

T. Equipment: Install to facilitate service, maintenance, and repair or replacement of components of both electrical equipment and other nearby installations. Connect in such a way as to facilitate future disconnecting with minimum interference with other items in the vicinity.

U. Provide touch up paint as required on equipment finishes that have been scratched, and provide touch up paint as directed by the Engineer. Touch up paint shall be provided in accordance with

the manufacturer's recommendations. Do not allow paint to come in contact with conductors, insulation or any live parts. All nameplates and labels shall remain visible and legible.

V. Where there are space heating equipment located adjacent to electrical equipment (including but not limited to, infrared unit heaters, electric/gas fired unit heaters, etc), the contractor shall coordinate with the manufacturer of the space heating equipment, get the installation manuals for the space heating equipment, and determine the clearance requirements around the space heating equipment. The contractor shall comply with the clearance requirements of the manufacturer, and shall not install any electrical equipment/wiring/conduit within the clearance area. Additionally, all electrical equipment/wiring/conduit shall be provided with appropriate clearance from space heating equipment, so that their maximum operating temperature, and/or temperature rating, is not exceeded.

W. Inside rooms which can be entered by vehicles (including, but not limited to, vehicle maintenance and storage rooms), keep the space directly in front of the exterior door (overhead door, rollup door, swing door, etc.) clear of all electrical items. The volume of the clear space shall not be less than the following:

1. Volume of clear space = width of the exterior door opening x height of the exterior door opening x distance from the exterior door to the opposite wall

X. Where the contract documents specifies a product name, model, or manufacturer, and this product has been discontinued or is no longer in production, the contractor shall provide a product from the same manufacturer, that meets the requirements indicated in the contract documents, at no additional cost to the owner. The product provided by the contractor shall be an approved equal of the specified product. Also, the contractor shall provide a written statement from the specified manufacturer, indicating that the specified product has been discontinued or is no longer in production. All products shall be submitted for review and approval by the design team.

Y. The contractor shall core drill holes in exiting concrete walls, ceilings, and floors as required for the installation of wiring and conduit. The contractor shall use ground penetrating radar to scan the concrete for any obstructions and/or structural elements/components prior to core drilling. Core drilling shall be made only at locations which are free of obstructions and/or structural elements/components. Do not drill, cut, or damage beams, joists, trusses, and other load bearing structures. All work shall be reviewed and approved by the owner, the architect, the structural engineer, and the Authorities Having Jurisdiction.

Z. Where equipment and systems require registration for any purpose (including, but not limited to, registration for the purposes of enrollment in warranty plans, service plans, software update plans, etc.), the contractor shall register the equipment and systems as required, and provide all account/login information/passwords to the owner.

AA. The contractor shall apply and pay for all permits related to his work. All work shall be inspected and approved by the Authorities Having Jurisdiction.

BB. All work shall comply with the NEC and the applicable codes.

CC. Provide access doors where the NEC or the manufacturer requires access for equipment concealed behind walls or ceilings. Access doors are specified in Section 083113 "Access Doors And Frames". Provide fire rated access doors for fire rated walls and ceilings.

DD. All free standing electrical distribution equipment, unless otherwise indicated, shall be provided on concrete equipment bases minimum of four inches above finished floor or grade and extending a minimum of 6” past the equipment footprint.

3.2 FIRESTOPPING

A. Apply firestopping to penetrations of fire-rated floor and wall assemblies for electrical installations to restore original fire-resistance rating of assembly. Firestopping materials must be approved for specific use.

B. Penetrations in Fire-Resistance-Rated Walls: Provide penetration firestopping with ratings determined per ASTM E 814 or UL 1479, based on testing at a positive pressure differential of 0.01-inch wg (2.49 Pa).

1. Fire-resistance-rated walls include fire walls, fire-barrier walls, smoke-barrier walls and fire partitions.

C. F-Rating: Not less than the fire-resistance rating of constructions penetrated.

D. Manufacturers:

2. 3m
3. Rockwool
4. Tremco
5. STI

E. Comply with the applicable requirements indicated in Section 078413 "Penetration Firestopping", or the requirements in this specification section, whichever is more stringent.

3.3 TESTING REQUIREMENTS AND INSTRUCTIONS

A. The Electrical Contractor shall provide supervision, labor, materials, tools, test instruments and all other equipment or services and expenses required to test, adjust, set, calibrate, and operationally check work and components of the electrical system and circuitry throughout the work.

B. The Electrical Subcontractor shall pay for all tests specified in this Section, including expenses incident to retests occasioned by defects and failures of equipment to meet specifications, at no additional cost to owner. Any defects or deficiencies discovered in any of the electrical work shall be corrected.

C. The Electrical Contractor shall:

1. Replace wiring and equipment found defective (defined as failing to meet specified requirements) at no additional cost to Owner
2. Submit digital copies of test results to the Engineer.

D. Do not void equipment warranties or guarantees by testing and checkout work. Checks and tests shall be supplemental to and compatible with the manufacturer's installation instructions. Where deviations are apparent, obtain the manufacturer's approved review of procedure prior to testing. Where any repairs, modifications, adjustments, tests or checks are to be made, the Contractor shall contact the engineer to determine if the work should be performed by or with the manufacturer's representative.

1. All checks and tests specified for proper operating and safety of equipment and personnel are to be performed concurrent with progression of the w work, prior to Final Acceptance by owner.

E. Tests are to:

1. Provide initial equipment/system acceptance.
2. Provide recorded data for future routine maintenance and trouble shooting.
3. Provide assurance that each system component is installed satisfactorily and can be expected to perform, and continue to perform, its specified function with reasonable reliability throughout the life of the facility.

F. At any stage of construction and when observed, any electrical equipment or system determined to be damaged, or faulty, is to be reported to the engineer. Corrective action by the Contractor requires prior engineer approval, retesting, and inspection.

G. Prior to testing and start-up, equipment and wiring shall be properly and permanently identified with nameplates, and other identification as specified in this Section. Check and tighten terminals and connection points, remove shipping blocks and thoroughly clean equipment, repair damaged or scratched finishes, inspect for broken and missing parts and review and collect manufacturer's drawings and instructions for delivery to the engineer. Make routine checks and tests as the job progresses to ensure that wiring and equipment is properly installed.

H. Testing and checkout work is to be performed with fully qualified personnel skilled in the particular tests being conducted. Personnel are to have at least five years of experience with tests of same type and size as specified.

I. Inspections and tests shall be in accordance with the following applicable codes and standards as amended to date, unless otherwise specified.

1. National Electrical Manufacturer's Association - NEMA.
2. American Society for Testing and Materials - ASTM.
3. Institute of Electrical and Electronic Engineers -IEEE.
4. National Electrical Testing Association - NETA.
5. American National Standards Institute - ANSI.

    a. C2: National Electrical Safety Code.
    b. Z244-1: American National Standard for Personnel Protection.

6. Insulated Cable Engineers Association - ICEA.
7. Association of Edison Illuminating Companies - AEIC.
8. Occupational Safety and health Administration.

    a. OSHA Part 1910; Subpart S, 1910.308.

b. OSHA Part 1926; Subpart V, 1926.950 through 1926.960.

9. National Fire Protection Association - NFPA.

a. 70B: Electrical Equipment Maintenance.
b. 70E: Electrical Safety Requirements for Employer Workplaces.
c. 70: National Electrical Code.
d. 78: Lightning Protection Code.
e. 101: Life Safety Code.

10. Inspections and tests shall utilize the following references:

a. Contract Drawings and Specifications.

11. Contractor's Short Circuit and Coordination Study.
12. Manufacturer's printed test procedures for respective equipment.

J. Test Equipment:

1. Test equipment used by the Contractor is to be inspected and calibrated.
2. Perform calibration and setting checks with calibrated test instruments of at least twice that of that of the accuracy of the equipment, device, relay or meter under test. Dated calibration labels shall be visible on test equipment. Calibrations over 6 months old are not acceptable on field test instruments. Inspect test instruments for proper operation prior to proceeding with the tests. Record serial and model numbers of the instruments used on the test forms.

K. Test Procedures:

1. The Electrical Subcontractor is responsible for the preparation of the procedures and schedules for the work specified herein. This work is to be coordinated and compatible with both the work and schedule of the other crafts. Sequence the tests and checks so that the equipment can be energized immediately after the completion of the application tests.
2. Submit proposed testing and check out forms. The procedures shall provide specific instructions for the checking and testing of each electrical component of each system. Schedule tests and inspections as the job progresses. Test procedures submitted shall include job safety rules.

L. After each electrical system installation is complete, perform the tests to determine that the entire system is in proper working order and in accordance with applicable codes, manufacturer's instructions, drawings, and specifications. Tests are in addition to shop tests of individual items at the manufacturer's plant. Perform insulation and ground resistance tests before operating tests.

M. Perform insulation tests on electrical equipment, apparatus, cables, motors, generators, transformers, circuit breakers and switches, switchgear, motor control centers, and similar electrical equipment, at the following times and conditions:

1. Prior to energization and/or placing into service.
2. When damage to the insulation is suspected or known to exist.
3. After repairs or modifications to the equipment affecting the insulation.

4. Where lightning or other surge conditions are known to have existed on the circuit.

N. Make openings in circuits for test instruments and place and connect instruments, equipment, and devices, required for the tests. Upon completion of tests, remove instruments and instrument connections and restore circuits to permanent condition.

O. List each circuit and measured resistance as test data. Maintain record of insulation resistance values. Identify conductor, or equipment, date that value was taken and resistance value. Arrange information in tabular form and submit to Engineer.

P. Report inspections, tests, and calibrations in writing on engineer-approved reports/forms. The recorded data form shall have the signatures of the persons conducting the tests, authorized witnesses, and the engineer. The forms shall serve as the test and inspection checklist.

Q. When the electrical tests and inspections specified or required within this Section are completed and results reported, reviewed, and approved by the engineer, the Contractor may consider that portion of the electrical equipment system or installation electrically complete. The Contractor will then affix appropriate, approved, and dated completion or calibration labels to the tested equipment and notify the engineer of electrical completion. If the engineer finds completed work unacceptable, he will notify the Contractor in writing of the unfinished or deficient work, with the reason for his rejection, to be corrected by the Contractor. The Contractor will notify the engineer in writing when exceptions have been corrected. The Contractor will prepare a "Notification of Substantial Electrical Completion" for approval by the engineer following engineer's acceptance of electrical completion. If later in-service operation or further testing identifies problems attributable to the Contractor, these will be corrected by the Contractor, at no additional cost to owner.

3.4 THIRD PARTY ELECTRICAL INSPECTION

A. Contractor shall hire a third-party inspection agency to inspect electrical work.

B. Contractor shall carry in their bid all required expenses.

END OF SECTION 260500

SECTION 260519 - LOW-VOLTAGE ELECTRICAL POWER CONDUCTORS AND CABLES

PART 1 - GENERAL

1.1 GENERAL REQUIREMENTS

A. Drawings and general provisions of the Contract, including General and Supplementary Conditions and Division 01 Specification Sections, apply to this Section.

B. Examine all other Sections of the Specifications for requirements that affect work under this Section whether or not such work is specifically mentioned in this Section.

C. Coordinate work with that of all other trades affecting, or affected by work of this Section. Cooperate with such trades to assure the steady progress of all work under the Contract.

1.2 SUMMARY

A. This Section includes the following:

1. Building wires and cables rated 600 V and less.
2. Connectors, splices, and terminations rated 600 V and less.

1.3 SUBMITTALS

A. Product Data: For each type of product indicated.

B. Field quality-control test reports.

1.4 QUALITY ASSURANCE

A. Electrical Components, Devices, and Accessories: Listed and labeled as defined in NFPA 70, Article 100, by a testing agency acceptable to authorities having jurisdiction, and marked for intended use.

B. Comply with NFPA 70.

PART 2 - PRODUCTS

2.1 CONDUCTORS AND CABLES

A. Manufacturers: Subject to compliance with requirements, provide products by one of the following:

1. General Cable Corporation.

2. Senator Wire & Cable Company.
3. Southwire Company.

B. Copper Conductors: Comply with NEMA WC 70.

C. Conductor Insulation: Comply with NEMA WC 70 for Types THHN-THWN.

D. Two-hour Fire Rated: Comply with UL2196 Type RHW

2.2 CONNECTORS AND SPLICES

A. Manufacturers: Subject to compliance with requirements, provide products by one of the following:

1. Hubbell Power Systems, Inc.
2. O-Z/Gedney; EGS Electrical Group LLC.
3. 3M; Electrical Products Division.

B. Description: Factory-fabricated connectors and splices of size, ampacity rating, material, type, and class for application and service indicated.

PART 3 - EXECUTION

3.1 CONDUCTOR MATERIAL APPLICATIONS

A. Feeders: Copper; solid for No. 10 AWG and smaller; stranded for No. 8 AWG and larger.

B. Feeders: Copper for feeders smaller than No. 4 AWG; copper or aluminum for feeders No. 4 AWG and larger. Conductors shall be solid for No. 10 AWG and smaller; stranded for No. 8 AWG and larger.

C. Branch Circuits: Copper. Solid for No. 10 AWG and smaller; stranded for No. 8 AWG and larger.

D. Branch Circuits: Copper. Solid for No. 12 AWG and smaller; stranded for No. 10 AWG and larger.

E. VFC Output Circuits Cable: Extra-flexible stranded for all sizes.

F. Power-Limited Fire Alarm and Control: Solid for No. 12 AWG and smaller.

3.2 CONDUCTOR INSULATION AND MULTICONDUCTOR CABLE APPLICATIONS AND WIRING METHODS

A. Service Entrance: Type XHHW-2, single conductors in raceway.

B. Exposed Feeders: Type THHN/THWN-2, single conductors in raceway.

C. Feeders Concealed in Ceilings, Walls, Partitions, and Crawlspaces: Type THHN/THWN-2, single conductors in raceway.

D. Feeders Concealed in Concrete, below Slabs-on-Grade, and Underground: Type THHN/THWN-2, single conductors in raceway.

E. Exposed Branch Circuits, Including in Crawlspaces: Type THHN/THWN-2, single conductors in raceway.

F. Branch Circuits Concealed in Ceilings, Walls, and Partitions: Metal-clad cable, Type MC.

G. Branch Circuits Concealed in Concrete, below Slabs-on-Grade, and Underground: Type THHN/THWN-2, single conductors in raceway.

H. Cord Drops and Portable Appliance Connections: Type SO, hard service cord with stainless-steel, wire-mesh, strain relief device at terminations to suit application. Feeders in conduit outdoors: Type XHHW.

3.3 INSTALLATION OF CONDUCTORS AND CABLES

A. Conceal cables in finished walls, ceilings, and floors unless otherwise indicated.

B. Complete raceway installation between conductor and cable termination points according to Section 260533 "Raceways and Boxes for Electrical Systems" prior to pulling conductors and cables.

C. Use manufacturer-approved pulling compound or lubricant where necessary; compound used must not deteriorate conductor or insulation. Do not exceed manufacturer's recommended maximum pulling tensions and sidewall pressure values.

D. Use pulling means, including fish tape, cable, rope, and basket-weave wire/cable grips, that will not damage cables or raceway.

E. Install exposed cables parallel and perpendicular to surfaces of exposed structural members, and follow surface contours where possible.

F. Support cables according to Section 260529 "Hangers and Supports for Electrical Systems."

3.4 CONNECTIONS

A. Tighten electrical connectors and terminals according to manufacturer's published torque-tightening values. If manufacturer's torque values are not indicated, use those specified in UL 486A and UL 486B.

B. Wiring at Outlets: Install conductor at each outlet, with at least 6 inches (150 mm).

3.5 FIRESTOPPING

A. Refer to 260500.

3.6 FIELD QUALITY CONTROL

A. Perform tests and inspections and prepare test reports.

B. Tests and Inspections:

1. Perform each visual and mechanical inspection and electrical test stated in NETA Acceptance Testing Specification. Certify compliance with test parameters.

C. Test Reports: Prepare a written report to record the following:

1. Test procedures used.
2. Test results that comply with requirements.
3. Test results that do not comply with requirements and corrective action taken to achieve compliance with requirements.

D. Remove and replace malfunctioning units and retest as specified above.

END OF SECTION 260519

SECTION 260529 - HANGERS AND SUPPORTS FOR ELECTRICAL SYSTEMS

PART 1 - GENERAL

1.1 GENERAL REQUIREMENTS

A. Drawings and general provisions of the Contract, including General and Supplementary Conditions and Division 01 Specification Sections, apply to this Section.

B. Examine all other Sections of the Specifications for requirements that affect work under this Section whether or not such work is specifically mentioned in this Section.

C. Coordinate work with that of all other trades affecting, or affected by work of this Section. Cooperate with such trades to assure the steady progress of all work under the Contract.

1.2 SUMMARY

A. This Section includes the following:

1. Hangers and supports for electrical equipment and systems.

1.3 DEFINITIONS

A. EMT: Electrical metallic tubing.

B. RMC: Rigid metal conduit.

1.4 PERFORMANCE REQUIREMENTS

A. Design supports for multiple raceways capable of supporting combined weight of supported systems and its contents.

1.5 SUBMITTALS

A. Product Data: For the following:

1. Steel slotted support systems.
2. Nonmetallic slotted support systems.

B. Welding certificates.

1.6 QUALITY ASSURANCE

A. Welding: Qualify procedures and personnel according to AWS D1.1/D1.1M, "Structural Welding Code - Steel."

B. Comply with NFPA 70.

PART 2 - PRODUCTS

2.1 SUPPORT, ANCHORAGE, AND ATTACHMENT COMPONENTS

A. Steel Slotted Support Systems: Comply with MFMA-4, factory-fabricated components for field assembly.

1. Manufacturers: Subject to compliance with requirements, provide products by one of the following:

a. Allied Tube & Conduit.
b. Cooper B-Line, Inc.; a division of Cooper Industries.
c. ERICO International Corporation.
d. Thomas & Betts Corporation.
e. Unistrut; Tyco International, Ltd.

2. Metallic Coatings: Hot-dip galvanized after fabrication and applied according to MFMA-4.

B. Raceway and Cable Supports: As described in NECA 1 and NECA 101.

C. Conduit and Cable Support Devices: Steel and malleable-iron hangers, clamps, and associated fittings, designed for types and sizes of raceway or cable to be supported.

D. Structural Steel for Fabricated Supports and Restraints: ASTM A 36/A 36M, steel plates, shapes, and bars; black and galvanized.

E. Mounting, Anchoring, and Attachment Components: Items for fastening electrical items or their supports to building surfaces include the following:

1. Powder-Actuated Fasteners: Threaded-steel stud, for use in hardened portland cement concrete, steel, or wood, with tension, shear, and pullout capacities appropriate for supported loads and building materials where used.
2. Mechanical-Expansion Anchors: Insert-wedge-type, stainless steel, for use in hardened portland cement concrete with tension, shear, and pullout capacities appropriate for supported loads and building materials in which used.
3. Concrete Inserts: Steel or malleable-iron, slotted support system units similar to MSS Type 18; complying with MFMA-4 or MSS SP-58.
4. Clamps for Attachment to Steel Structural Elements: MSS SP-58, type suitable for attached structural element.

5. Through Bolts: Structural type, hex head, and high strength. Comply with ASTM A 325.
6. Toggle Bolts: All-steel springhead type.
7. Hanger Rods: Threaded steel.

2.2 FABRICATED METAL EQUIPMENT SUPPORT ASSEMBLIES

A. Description: Welded or bolted, structural-steel shapes, shop or field fabricated to fit dimensions of supported equipment.

PART 3 - EXECUTION

3.1 APPLICATION

A. Comply with NECA 1 and NECA 101 for application of hangers and supports for electrical equipment and systems except if requirements in this Section are stricter.

B. Maximum Support Spacing and Minimum Hanger Rod Size for Raceway: Space supports for EMT and RMC as required by NFPA 70. Minimum rod size shall be 1/4 inch (6 mm) in diameter.

C. Multiple Raceways or Cables: Install trapeze-type supports fabricated with steel slotted support system, sized so capacity can be increased by at least 25 percent in future without exceeding specified design load limits.

1. Secure raceways and cables to these supports with single-bolt conduit clamps.

D. Spring-steel clamps designed for supporting single conduits without bolts may be used for 1-1/2-inch (38-mm) and smaller raceways serving branch circuits and communication systems above suspended ceilings and for fastening raceways to trapeze supports.

3.2 SUPPORT INSTALLATION

A. Comply with NECA 1 and NECA 101 for installation requirements except as specified in this Article.

B. Raceway Support Methods: In addition to methods described in NECA 1, EMT**,** IMC, and RMC may be supported by openings through structure members, as permitted in NFPA 70.

C. Strength of Support Assemblies: Where not indicated, select sizes of components so strength will be adequate to carry present and future static loads within specified loading limits. Minimum static design load used for strength determination shall be weight of supported components plus 200 lb (90 kg).

Mounting and Anchorage of Surface-Mounted Equipment and Components: Anchor and fasten electrical items and their supports to building structural elements by the following methods unless otherwise indicated by code:

1. To New Concrete: Bolt to concrete inserts.
2. To Masonry: Approved toggle-type bolts on hollow masonry units and expansion anchor fasteners on solid masonry units.
3. To Existing Concrete: Expansion anchor fasteners.
4. Instead of expansion anchors, powder-actuated driven threaded studs provided with lock washers and nuts may be used in existing standard-weight concrete 4 inches (100 mm) thick or greater. Do not use for anchorage to lightweight-aggregate concrete or for slabs less than 4 inches (100 mm) thick.
5. To Light Steel: Sheet metal screws.
6. Items Mounted on Hollow Walls and Nonstructural Building Surfaces: Mount cabinets, panelboards, disconnect switches, control enclosures, pull and junction boxes, transformers, and other devices on slotted-channel racks attached to substrate by means that meet seismic-restraint strength and anchorage requirements.

D. Drill holes for expansion anchors in concrete at locations and to depths that avoid reinforcing bars.

3.3 INSTALLATION OF FABRICATED METAL SUPPORTS

A. Cut, fit, and place miscellaneous metal supports accurately in location, alignment, and elevation to support and anchor electrical materials and equipment.

B. Field Welding: Comply with AWS D1.1/D1.1M.

3.4 PAINTING

A. Touchup: Clean field welds and abraded areas of shop paint. Paint exposed areas immediately after erecting hangers and supports. Use same materials as used for shop painting. Comply with SSPC-PA 1 requirements for touching up field-painted surfaces.

1. Apply paint by brush or spray to provide minimum dry film thickness of 2.0 mils (0.05 mm).

B. Galvanized Surfaces: Clean welds, bolted connections, and abraded areas and apply galvanizing-repair paint to comply with ASTM A 780.

END OF SECTION 260529

ECTION 260533 - RACEWAYS AND BOXES FOR ELECTRICAL SYSTEMS

PART 1 - GENERAL

1.1 RELATED DOCUMENTS

A. Drawings and general provisions of the Contract, including General and Supplementary Conditions and Division 01 Specification Sections, apply to this Section.

1.2 SUMMARY

A. Section Includes:

1. Metal conduits, tubing, and fittings.
2. Nonmetal conduits, tubing, and fittings.
3. Metal wireways and auxiliary gutters.
4. Nonmetal wireways and auxiliary gutters.
5. Surface raceways.
6. Boxes, enclosures, and cabinets.

1.3 DEFINITIONS

A. ARC: Aluminum rigid conduit.

B. GRC: Galvanized rigid steel conduit.

C. IMC: Intermediate metal conduit.

1.4 ACTION SUBMITTALS

A. Product Data: For surface raceways, wireways and fittings, floor boxes, hinged-cover enclosures, and cabinets.

PART 2 - PRODUCTS

2.1 METAL CONDUITS, TUBING, AND FITTINGS

A. Manufacturers: Subject to compliance with requirements, provide products by one of the following:

1. Alflex Inc.
2. Allied Tube & Conduit; a Tyco International Ltd. Co.
3. O-Z Gedney; a unit of General Signal.

4. Wheatland Tube Company.

B. Listing and Labeling: Metal conduits, tubing, and fittings shall be listed and labeled as defined in NFPA 70, by a qualified testing agency, and marked for intended location and application.

C. GRC: Comply with ANSI C80.1 and UL 6.

D. ARC: Comply with ANSI C80.5 and UL 6A.

E. IMC: Comply with ANSI C80.6 and UL 1242.

F. EMT: Comply with ANSI C80.3 and UL 797.

G. FMC: Comply with UL 1; zinc-coated steel.

H. LFMC: Flexible steel conduit with PVC jacket and complying with UL 360.

I. Fittings for Metal Conduit: Comply with NEMA FB 1 and UL 514B.

1. Conduit Fittings for Hazardous (Classified) Locations: Comply with UL 886 and NFPA 70.
2. Fittings for EMT:

   a. Material: die cast.
   b. Type: Setscrew or Compression.

3. Expansion Fittings: PVC or steel to match conduit type, complying with UL 651, rated for environmental conditions where installed, and including flexible external bonding jumper.

J. Joint Compound for IMC, GRC, or ARC: Approved, as defined in NFPA 70, by authorities having jurisdiction for use in conduit assemblies, and compounded for use to lubricate and protect threaded conduit joints from corrosion and to enhance their conductivity.

2.2 NONMETALLIC CONDUITS, TUBING, AND FITTINGS

A. Manufacturers: Subject to compliance with requirements, provide products by one of the following:

1. AFC Cable Systems
2. Arnco
3. CANTEX
4. RACO
   Alflex Inc.
5. Allied Tube & Conduit; a Tyco International Ltd. Co.
6. O-Z Gedney; a unit of General Signal.
7. Wheatland Tube Company

B. Listing and Labeling: Nonmetallic conduits, tubing, and fittings shall be listed and labeled as defined in NFPA 70, by a qualified testing agency, and marked for intended location and application.

C. ENT: Comply with NEMA TC 13 and UL 1653.

D. RNC: Type EPC-40-PVC, complying with NEMA TC 2 and UL 651 unless otherwise indicated.

E. LFNC: Comply with UL 1660.

F. Rigid HDPE: Comply with UL 651A.

G. Continuous HDPE: Comply with UL 651B.

H. Coilable HDPE: Preassembled with conductors or cables, and complying with ASTM D 3485.

I. RTRC: Comply with UL 1684A and NEMA TC 14.

J. Fittings for ENT and RNC: Comply with NEMA TC 3; match to conduit or tubing type and material.

K. Fittings for LFNC: Comply with UL 514B.

L. Solvents and Adhesives: As recommended by conduit manufacturer.

2.3 METAL WIREWAYS AND AUXILIARY GUTTERS

A. Manufacturers: Subject to compliance with requirements, provide products by one of the following:

1. Erickson Electrical Equipment Company.
2. Hoffman.
3. Hubbell Incorporated; Killark Electric Manufacturing Co. Division.
4. O-Z/Gedney; a unit of General Signal.
5. RACO; a Hubbell Company.
6. Robroy Industries, Inc.; Enclosure Division.
7. Spring City Electrical Manufacturing Company.
8. Thomas & Betts Corporation

B. Description: Sheet metal, complying with UL 870 and NEMA 250, Type 3R unless otherwise indicated, and sized according to NFPA 70.

1. Metal wireways installed outdoors shall be listed and labeled as defined in NFPA 70, by a qualified testing agency, and marked for intended location and application.

C. Fittings and Accessories: Include covers, couplings, offsets, elbows, expansion joints, adapters, hold-down straps, end caps, and other fittings to match and mate with wireways as required for complete system.

D. Wireway Covers: Screw-cover type unless otherwise indicated.

E. Finish: Manufacturer's standard enamel finish.

2.4 BOXES, ENCLOSURES, AND CABINETS

A. Manufacturers: Subject to compliance with requirements, provide products by one of the following:

1. Erickson Electrical Equipment Company.
2. Hoffman.
3. Hubbell Incorporated; Killark Electric Manufacturing Co. Division.
4. O-Z/Gedney; a unit of General Signal.
5. RACO; a Hubbell Company.
6. Robroy Industries, Inc.; Enclosure Division.
7. Spring City Electrical Manufacturing Company.
8. Thomas & Betts Corporation

B. General Requirements for Boxes, Enclosures, and Cabinets: Boxes, enclosures, and cabinets installed in wet locations shall be listed for use in wet locations.

C. Sheet Metal Outlet and Device Boxes: Comply with NEMA OS 1 and UL 514A.

D. Cast-Metal Outlet and Device Boxes: Comply with NEMA FB 1, ferrous alloy or aluminum, Type FD, with gasketed cover.

E. Nonmetallic Outlet and Device Boxes: Comply with NEMA OS 2 and UL 514C.

F. Metal Floor Boxes:

1. Material: Cast metal or sheet metal.
2. Type: Fully adjustable.
3. Shape: Rectangular or otherwise indicated.
4. Listing and Labeling: Metal floor boxes shall be listed and labeled as defined in NFPA 70, by a qualified testing agency, and marked for intended location and application.

G. Luminaire Outlet Boxes: Nonadjustable, designed for attachment of luminaire weighing 50 lb. Outlet boxes designed for attachment of luminaires weighing more than 50 lb shall be listed and marked for the maximum allowable weight.

H. Small Sheet Metal Pull and Junction Boxes: NEMA OS 1.

I. Cast-Metal Access, Pull, and Junction Boxes: Comply with NEMA FB 1 and UL 1773, galvanized, cast iron with gasketed cover.

J. Box extensions used to accommodate new building finishes shall be of same material as recessed box.

K. Device Box Dimensions: 4 inches square by 2-1/8 inches deep.

L. Gangable boxes are prohibited.

M. Hinged-Cover Enclosures: Comply with UL 50 and NEMA 250, Type 3R with continuous-hinge cover with flush latch unless otherwise indicated.

1. Metal Enclosures: Steel, finished inside and out with manufacturer's standard enamel.
2. Nonmetallic Enclosures: Fiberglass.
3. Interior Panels: Steel; all sides finished with manufacturer's standard enamel.

N. Cabinets:

1. NEMA 250, Type 1 or Type 3R galvanized-steel box with removable interior panel and removable front, finished inside and out with manufacturer's standard enamel.
2. Hinged door in front cover with flush latch and concealed hinge.
3. Key latch to match panelboards.
4. Metal barriers to separate wiring of different systems and voltage.
5. Accessory feet where required for freestanding equipment.
6. Nonmetallic cabinets shall be listed and labeled as defined in NFPA 70, by a qualified testing agency, and marked for intended location and application.

2.5 SOURCE QUALITY CONTROL FOR UNDERGROUND ENCLOSURES

A. Handhole and Pull-Box Prototype Test: Test prototypes of handholes and boxes for compliance with SCTE 77. Strength tests shall be for specified tier ratings of products supplied.

1. Tests of materials shall be performed by an independent testing agency.
2. Strength tests of complete boxes and covers shall be by either an independent testing agency or manufacturer. A qualified registered professional engineer shall certify tests by manufacturer.
3. Testing machine pressure gages shall have current calibration certification complying with ISO 9000 and ISO 10012 and traceable to NIST standards.

PART 3 - EXECUTION

3.1 RACEWAY APPLICATION

A. Outdoors: Apply raceway products as specified below unless otherwise indicated:

1. Exposed Conduit: GRC.
2. Concealed Conduit, Aboveground: GRC.
3. Underground Conduit: RNC, Type EPC-40-PVC or Type EPC-80-PVC, concrete encased.
4. Connection to Vibrating Equipment (Including Transformers and Hydraulic, Pneumatic, Electric Solenoid, or Motor-Driven Equipment): LFMC.
5. Boxes and Enclosures, Aboveground: NEMA 250, Type 3R.

B. Indoors: Apply raceway products as specified below unless otherwise indicated:

1. Exposed, Not Subject to Physical Damage: EMT.
2. Exposed, Not Subject to Severe Physical Damage: EMT.
3. Exposed and Subject to Severe Physical Damage: GRC. Raceway locations include the following:

    a. Loading dock.
    b. Corridors used for traffic of mechanized carts, forklifts, and pallet-handling units.
    c. Mechanical rooms up to 8ft above finished floor. Use of EMT above the 8ft is permitted
    d. Vehicle Maintenance and supporting areas up to 8ft above finished floor. Use of EMT above the 8ft is permitted.

4. Concealed in Ceilings and Interior Walls and Partitions: EMT (use of MC cable in administration areas is allowed).
5. Connection to Vibrating Equipment (Including Transformers and Hydraulic, Pneumatic, Electric Solenoid, or Motor-Driven Equipment): FMC, except use LFMC in damp or wet locations.
6. Damp or Wet Locations: GRC.
7. Boxes and Enclosures: NEMA 250, Type 1, except use NEMA 250, Type 4 stainless steel in institutional and commercial kitchens and damp or wet locations.

C. Minimum Raceway Size: 3/4-inch trade size.

D. Raceway Fittings: Compatible with raceways and suitable for use and location.

1. Rigid and Intermediate Steel Conduit: Use threaded rigid steel conduit fittings unless otherwise indicated. Comply with NEMA FB 2.10.
2. PVC Externally Coated, Rigid Steel Conduits: Use only fittings listed for use with this type of conduit. Patch and seal all joints, nicks, and scrapes in PVC coating after installing conduits and fittings. Use sealant recommended by fitting manufacturer and apply in thickness and number of coats recommended by manufacturer.
3. EMT: Use setscrew or compression, cast-metal fittings. Comply with NEMA FB 2.10.
4. Flexible Conduit: Use only fittings listed for use with flexible conduit. Comply with NEMA FB 2.20.

E. Install nonferrous conduit or tubing for circuits operating above 60 Hz. Where aluminum raceways are installed for such circuits and pass through concrete, install in nonmetallic sleeve.

F. Do not install aluminum conduits, boxes, or fittings in contact with concrete or earth.

G. Install surface raceways only where indicated on Drawings.

H. Do not install nonmetallic conduit where ambient temperature exceeds 120 deg F.

3.2 INSTALLATION

A. Comply with NECA 1 and NECA 101 for installation requirements except where requirements on Drawings or in this article are stricter. Comply with NECA 102 for aluminum conduits. Comply with NFPA 70 limitations for types of raceways allowed in specific occupancies and number of floors.

B. Keep raceways at least 6 inches away from parallel runs of flues and steam or hot-water pipes. Install horizontal raceway runs above water and steam piping.

C. Complete raceway installation before starting conductor installation.

D. Comply with requirements in Section 260529 "Hangers and Supports for Electrical Systems" for hangers and supports.

E. Arrange stub-ups so curved portions of bends are not visible above finished slab.

F. Install no more than the equivalent of three 90-degree bends in any conduit run except for control wiring conduits, for which fewer bends are allowed. Support within 12 inches of changes in direction.

G. Conceal conduit and EMT within finished walls, ceilings, and floors unless otherwise indicated. Install conduits parallel or perpendicular to building lines.

H. Support conduit within 12 inches of enclosures to which attached.

I. Raceways Embedded in Slabs:

1. Run conduit larger than 1-inch trade size, parallel or at right angles to main reinforcement. Where at right angles to reinforcement, place conduit close to slab support. Secure raceways to reinforcement at maximum 10-foot intervals.
2. Arrange raceways to cross building expansion joints at right angles with expansion fittings.
3. Arrange raceways to keep a minimum of 3 inch of concrete cover in all directions.
4. Do not embed threadless fittings in concrete unless specifically approved by Architect for each specific location.
5. Change from ENT to GRC before rising above floor.

J. Stub-ups to Above Recessed Ceilings:

1. Use EMT, IMC, or RMC for raceways.
2. Use a conduit bushing or insulated fitting to terminate stub-ups not terminated in hubs or in an enclosure.

K. Threaded Conduit Joints, Exposed to Wet, Damp, Corrosive, or Outdoor Conditions: Apply listed compound to threads of raceway and fittings before making up joints. Follow compound manufacturer's written instructions.

L. Coat field-cut threads on PVC-coated raceway with a corrosion-preventing conductive compound prior to assembly.

M. Raceway Terminations at Locations Subject to Moisture or Vibration: Use insulating bushings to protect conductors including conductors smaller than No. 4 AWG.

N. Terminate threaded conduits into threaded hubs or with locknuts on inside and outside of boxes or cabinets. Install bushings on conduits up to 1-1/4-inch trade size and insulated throat metal bushings on 1-1/2-inch trade size and larger conduits terminated with locknuts. Install insulated throat metal grounding bushings on service conduits.

O. Install raceways square to the enclosure and terminate at enclosures with locknuts. Install locknuts hand tight plus 1/4 turn more.

P. Do not rely on locknuts to penetrate nonconductive coatings on enclosures. Remove coatings in the locknut area prior to assembling conduit to enclosure to assure a continuous ground path.

Q. Cut conduit perpendicular to the length. For conduits 2-inch trade size and larger, use roll cutter or a guide to make cut straight and perpendicular to the length.

R. Install pull wires in empty raceways. Use polypropylene or monofilament plastic line with not less than 200-lb tensile strength. Leave at least 12 inches of slack at each end of pull wire. Cap underground raceways designated as spare above grade alongside raceways in use.

S. Surface Raceways:

1. Install surface raceway with a minimum 2-inch radius control at bend points.
2. Secure surface raceway with screws or other anchor-type devices at intervals not exceeding 48 inches and with no less than two supports per straight raceway section. Support surface raceway according to manufacturer's written instructions. Tape and glue are not acceptable support methods.

T. Install raceway sealing fittings at accessible locations according to NFPA 70 and fill them with listed sealing compound. For concealed raceways, install each fitting in a flush steel box with a blank cover plate having a finish similar to that of adjacent plates or surfaces. Install raceway sealing fittings according to NFPA 70.

U. Install devices to seal raceway interiors at accessible locations. Locate seals so no fittings or boxes are between the seal and the following changes of environments. Seal the interior of all raceways at the following points:

1. Where conduits pass from warm to cold locations, such as boundaries of refrigerated spaces.
2. Where an underground service raceway enters a building or structure.
3. Where otherwise required by NFPA 70.

V. Comply with manufacturer's written instructions for solvent welding RNC and fittings.

W. Expansion-Joint Fittings:

1. Install in each run of aboveground RNC that is located where environmental temperature change may exceed 30 deg F and that has straight-run length that exceeds 25 feet. Install in each run of aboveground RMC and EMT conduit that is located where environmental

temperature change may exceed 100 deg F and that has straight-run length that exceeds 100 feet.

2. Install type and quantity of fittings that accommodate temperature change listed for each of the following locations:

    a. Outdoor Locations Not Exposed to Direct Sunlight: 125 deg F temperature change.
    b. Outdoor Locations Exposed to Direct Sunlight: 155 deg F temperature change.
    c. Indoor Spaces Connected with Outdoors without Physical Separation: 125 deg F temperature change.

3. Install fitting(s) that provide expansion and contraction for at least 0.00041 inch per foot of length of straight run per deg of temperature change for PVC conduits. Install fitting(s) that provide expansion and contraction for at least 0.000078 inch per foot of length of straight run per deg F of temperature change for metal conduits.
4. Install expansion fittings at all locations where conduits cross building or structure expansion joints.
5. Install each expansion-joint fitting with position, mounting, and piston setting selected according to manufacturer's written instructions for conditions at specific location at time of installation. Install conduit supports to allow for expansion movement.

X. Flexible Conduit Connections: Comply with NEMA RV 3. Use a maximum of 72 inches of flexible conduit for recessed and semirecessed luminaires, equipment subject to vibration, noise transmission, or movement; and for transformers and motors.

1. Use LFMC in damp or wet locations subject to severe physical damage.
2. Use LFMC or LFNC in damp or wet locations not subject to severe physical damage.

Y. Mount boxes at heights indicated on Drawings. If mounting heights of boxes are not individually indicated, give priority to ADA requirements. Install boxes with height measured to center of box unless otherwise indicated.

Z. Recessed Boxes in Masonry Walls: Saw-cut opening for box in center of cell of masonry block, and install box flush with surface of wall. Prepare block surfaces to provide a flat surface for a raintight connection between box and cover plate or supported equipment and box.

AA. Horizontally separate boxes mounted on opposite sides of walls so they are not in the same vertical channel.

BB. Locate boxes so that cover or plate will not span different building finishes.

CC. Support boxes of three gangs or more from more than one side by spanning two framing members or mounting on brackets specifically designed for the purpose.

DD. Fasten junction and pull boxes to or support from building structure. Do not support boxes by conduits.

EE. Set metal floor boxes level and flush with finished floor surface.

FF. Set nonmetallic floor boxes level. Trim after installation to fit flush with finished floor surface.

3.3 SLEEVE AND SLEEVE-SEAL INSTALLATION FOR ELECTRICAL PENETRATIONS

A. Install sleeves and sleeve seals at penetrations of exterior floor and wall assemblies. Comply with requirements in Section 260544 "Sleeves and Sleeve Seals for Electrical Raceways and Cabling."

3.4 FIRESTOPPING

A. Install firestopping at penetrations of fire-rated floor and wall assemblies. Comply with requirements in Section 078413 "Penetration Firestopping."

3.5 PROTECTION

A. Protect coatings, finishes, and cabinets from damage and deterioration.

1. Repair damage to galvanized finishes with zinc-rich paint recommended by manufacturer.
2. Repair damage to PVC coatings or paint finishes with matching touchup coating recommended by manufacturer.

END OF SECTION 260533

SECTION 260553 - IDENTIFICATION FOR ELECTRICAL SYSTEMS

PART 1 - GENERAL

1.1 GENERAL REQUIREMENTS

A. Drawings and general provisions of the Contract, including General and Supplementary Conditions and Division 01 Specification Sections, apply to this Section.

B. Examine all other Sections of the Specifications for requirements that affect work under this Section whether or not such work is specifically mentioned in this Section.

1.2 SUMMARY

A. This Section includes the following:

1. Identification for conductors.
2. Equipment identification labels.

1.3 SUBMITTALS

A. Product Data: For each electrical identification product indicated.

1.4 QUALITY ASSURANCE

A. Comply with ANSI A13.1 and ANSI C2.

B. Comply with NFPA 70.

C. Comply with 29 CFR 1910.145.

1.5 COORDINATION

A. Coordinate identification names, abbreviations, colors, and other features with requirements in the Contract Documents, Shop Drawings, manufacturer's wiring diagrams, and the Operation and Maintenance Manual, and with those required by codes, standards, and 29 CFR 1910.145. Use consistent designations throughout Project.

B. Coordinate installation of identifying devices with completion of covering and painting of surfaces where devices are to be applied.

C. Coordinate installation of identifying devices with location of access panels and doors.

D. Install identifying devices before installing acoustical ceilings and similar concealment.

PART 2 - PRODUCTS

2.1 CONDUCTOR MATERIALS

A. Color-Coding Conductor Tape: Colored, self-adhesive vinyl tape not less than 3 mils (0.08 mm) thick by 1 to 2 inches (25 to 50 mm) wide.

B. Marker Tapes: Vinyl or vinyl-cloth, self-adhesive wraparound type, with circuit identification legend machine printed by thermal transfer or equivalent process.

2.2 EQUIPMENT IDENTIFICATION LABELS

A. Engraved, Laminated Acrylic or Melamine Label: Punched or drilled for screw mounting. White letters on a black background. Minimum letter height shall be 3/8 inch (10 mm).

PART 3 - EXECUTION

3.1 APPLICATION

A. Branch-Circuit Conductor Identification: Where there are conductors for more than three branch circuits in same junction or pull box, use color-coding conductor tape. Identify each ungrounded conductor according to source and circuit number.

B. Equipment Identification Labels: On each unit of equipment, install unique designation label that is consistent with wiring diagrams, schedules, and Operation and Maintenance Manual. Apply labels to disconnect switches and protection equipment, central or master units, control panels, control stations, terminal cabinets, and racks of each system. Systems include power, lighting, control, communication, signal, monitoring, and alarm systems unless equipment is provided with its own identification.

1. Labeling Instructions:

    a. Indoor Equipment: Engraved, laminated acrylic or melamine label.

2. Equipment to Be Labeled:

    a. Panelboards, electrical cabinets, and enclosures.
    b. Transformers.
    c. Disconnect switches.
    d. Push-button stations.

3.2 INSTALLATION

A. Verify identity of each item before installing identification products.

B. Location: Install identification materials and devices at locations for most convenient viewing without interference with operation and maintenance of equipment.

C. Apply identification devices to surfaces that require finish after completing finish work.

D. Self-Adhesive Identification Products: Clean surfaces before application, using materials and methods recommended by manufacturer of identification device.

E. Attach nonadhesive signs and plastic labels with screws and auxiliary hardware appropriate to the location and substrate.

F. Color-Coding for Phase and Voltage Level Identification, 600 V and Less: Use the colors listed below for ungrounded service, feeder, and branch-circuit conductors.

1. Colors for 208/120-V Circuits:

   a. Phase A: Black.
   b. Phase B: Red.
   c. Phase C: Blue.
   d. Neutral: White
   e. Ground: Green

2. Colors for 480/277-V Circuits:

   a. Phase A: Brown.
   b. Phase B: Orange.
   c. Phase C: Yellow.
   d. Neutral: White
   e. Ground: Green

3. Field-Applied, Color-Coding Conductor Tape: Apply in half-lapped turns for a minimum distance of 6 inches (150 mm) from terminal points and in boxes where splices or taps are made. Apply last two turns of tape with no tension to prevent possible unwinding. Locate bands to avoid obscuring factory cable markings.

END OF SECTION 260553

DIVISION 31

SECTION 312316 - EXCAVATION

PART 1 GENERAL

1.1 SECTION INCLUDES

A. Support and protection.

B. Excavation.

C. Excavation repairs.

1.2 RELATED REQUIREMENTS

A. Section 312323 - Fill.

1.3 DEFINITIONS

A. Excavation: Removal of material encountered above subgrade elevations and to lines and dimensions indicated.
   1. Authorized Additional Excavation: Excavation below subgrade elevations or beyond indicated lines and dimensions as directed by Architect. Authorized additional excavation and replacement material will be paid for according to Contract provisions for changes in the Work.
   2. Bulk Excavation: Excavation more than 10 feet in width and more than 30 feet in length.
   3. Unauthorized Excavation: Excavation below subgrade elevations or beyond indicated lines and dimensions without direction by Architect. Unauthorized excavation, as well as remedial work directed by Architect, shall be without additional compensation

B. Rock: Rock material in beds, ledges, unstratified masses, conglomerate deposits, and boulders of rock material that exceed 1 cu. yd. or more in volume that exceed a standard penetration resistance of 100 blows/2 inches when tested by a geotechnical testing agency, according to ASTM D1586.

C. Structures: Buildings, footings, foundations, retaining walls, slabs, tanks, curbs, mechanical and electrical appurtenances, or other man-made stationary features constructed above or below the ground surface.

D. Utilities: On-site underground pipes, conduits, ducts, and cables as well as underground services within buildings.

1.4 REFERENCE STANDARDS

A. 29 CFR 1926 - Safety and Health Regulations for Construction.

B. ASTM D1586 - Standard Test Method for Standard Penetration Test (SPT) and Split-Barrel Sampling of Soils.

C. ASTM D3740 - Standard Practice for Minimum Requirements for Agencies Engaged in Testing and/or Inspection of Soil and Rock as Used in Engineering Design and Construction.

D. ASTM E329 - Standard Specification for Agencies Engaged in Construction Inspection, Testing, or Special Inspection.

1.5 SUBMITTALS

A. See Section 013000 - Administrative Requirements for submittal procedures.

B. Field Quality Control Submittals: Document visual inspection of loadbearing excavated surfaces.

C. Preexcavation Photographs or Videotape: Show existing conditions of adjoining construction and site improvements, including finish surfaces that might be misconstrued as damage caused by excavation operations. Submit before excavation begins.

1.6 QUALITY ASSURANCE

A. Geotechnical Testing Agency Qualifications: Qualified according to ASTM E329 and ASTM D3740 for testing indicated.

1.7 FIELD CONDITIONS

A. Utility Location: Notify Call Before You Dig (811) before excavation to request approximate underground utility marking.

1.8 FIELD CONDITIONS

A. Traffic: Minimize interference with adjoining roads, streets, walks, and other adjacent occupied or used facilities during earth-moving operations.
   1. Do not close or obstruct streets, walks, or other adjacent occupied or used facilities without permission from Owner and authorities having jurisdiction.

B. Utility Locator Service: Notify utility locator service for area where Project is located before beginning earth-moving operations.

PART 2 PRODUCTS - NOT USED

PART 3 EXECUTION

3.1 PREPARATION

A. Identify required lines, levels, contours, and datum locations.

B. Locate and identify known utilities to remain and protect from damage.

C. Protect structures, utilities, sidewalks, pavements, and other facilities from damage caused by settlement, lateral movement, undermining, washout, and other hazards created by earth-moving operations.

D. Protect and maintain erosion and sedimentation controls during earth-moving operations.

E. Protect subgrades and foundation soils from freezing temperatures and frost. Remove temporary protection before placing subsequent materials.

3.2 DEWATERING

A. Prevent surface water and ground water from entering excavations, from ponding on prepared subgrades, and from flooding Project site and surrounding area.

B. Protect subgrades from softening, undermining, washout, and damage by rain or water accumulation.
   1. Reroute surface water runoff away from excavated areas. Do not allow water to accumulate in excavations. Do not use excavated trenches as temporary drainage ditches.

C. Dispose of water removed by dewatering in a manner that avoids endangering public health, property, and portions of work under construction or completed. Dispose of water and sediment in a manner that avoids inconvenience to others

3.3 SUPPORT AND PROTECTION

A. Excavation Safety: Comply with OSHA's Excavation Standard, 29 CFR 1926, Subpart P.

3.4 EXCAVATION

A. General Excavation:
   1. Excavate to indicated contours, elevations, and grades.
   2. Unclassified Excavation: Excavate material as indicated on drawings.

B. Excavation to accommodate foundations and underground utilities.
   1. Excavate to specified elevations.
   2. Over-excavate to safely install, adjust, and remove forms, bracing, or supports necessary for installation of work.
   3. Hand trim excavations. Remove loose matter.

C. Notify Architect of unexpected subsurface conditions and discontinue affected work in area until notified to resume work.

3.5 EXCAVATION REPAIRS

A. Notify Architect of over-excavations.

B. Correct areas over-excavated with native soil.

3.6 FIELD QUALITY CONTROL

A. See Section 014000 - Quality Requirements for additional requirements.

B. Provide access for visual inspection of loadbearing excavated surfaces by Architect before proceeding with work.

3.7 CLEANING

A. See Section 017000 - Execution and Closeout Requirements for additional requirements.

B. Remove excavated material unsuitable for re-use from site.

C. Remove excess excavated material from site.

3.8 PROTECTION

A. Divert surface water away from excavations.

B. Maintain stability of banks and loose soils; prevent from falling into excavations.

C. Maintain excavations in satisfactory, undisturbed condition.

D. Protect bottom of excavations from freezing.

END OF SECTION 312316

SECTION 312323 - FILL

PART 1 GENERAL

1.1 SECTION INCLUDES

A. Filling, backfilling, and compacting for building volume below grade, footings, slabs-on-grade, and utilities within the building.

1.2 RELATED REQUIREMENTS

A. Section 014533 - Code-Required Special Inspections and Procedures.

B. Section 033000 - Cast-in-Place Concrete.

C. Section 312316 - Excavation: Removal and handling of soil to be re-used.

1.3 DEFINITIONS

A. Backfill: Soil material or controlled low-strength material used to fill an excavation.

B. Bedding Course: Aggregate layer placed over the excavated subgrade in a trench before laying pipe.

C. Borrow Soil: Satisfactory soil imported from off-site for use as fill or backfill.

D. Fill: Soil materials used to raise existing grades.

E. Structures: Footings, foundations, retaining walls, slabs, or other man-made stationary features constructed above or below the ground surface.

F. Subgrade: Uppermost surface of an excavation or the top surface of a fill or backfill immediately below subbase, drainage fill, drainage course, or topsoil materials.

G. Utilities: On-site underground pipes, conduits, ducts, and cables as well as underground services within buildings.

1.4 REFERENCE STANDARDS

A. AASHTO T 180 - Standard Method of Test for Moisture-Density Relations of Soils Using a 4.54-kg (10-lb) Rammer and a 457-mm (18-in.) Drop.

B. ASTM D698 - Standard Test Methods for Laboratory Compaction Characteristics of Soil Using Standard Effort (12,400 ft-lbf/ft3 (600 kN-m/m3)).

C. ASTM D1556/D1556M - Standard Test Method for Density and Unit Weight of Soil in Place by Sand-Cone Method.

D. ASTM D1557 - Standard Test Methods for Laboratory Compaction Characteristics of Soil Using Modified Effort (56,000 ft-lbf/ft3 (2,700 kN-m/m3)).

E. ASTM D2167 - Standard Test Method for Density and Unit Weight of Soil in Place by the Rubber Balloon Method.

F. ASTM D2487 - Standard Practice for Classification of Soils for Engineering Purposes (Unified Soil Classification System).

G. ASTM D2940/D2940M - Standard Specification for Graded Aggregate Material for Bases or Subbases for Highways or Airports.

H. ASTM D3740 - Standard Practice for Minimum Requirements for Agencies Engaged in Testing and/or Inspection of Soil and Rock as Used in Engineering Design and Construction.

I. ASTM D6938 - Standard Test Methods for In-Place Density and Water Content of Soil and Soil-Aggregate by Nuclear Methods (Shallow Depth).

J. ASTM E329 - Standard Specification for Agencies Engaged in Construction Inspection, Testing, or Special Inspection.

1.5 SUBMITTALS

A. Fill Composition Test Reports: Results of laboratory tests on proposed and actual materials used.
   1. Classification according to ASTM D2487.
   2. Laboratory compaction curve according to ASTM D698.

B. Compaction Density Test Reports.

C. Testing Agency Qualification Statement.

1.6 QUALITY ASSURANCE

A. Testing Agency Qualifications: Independent firm specializing in performing testing and inspections of the type specified in this section. Qualified according to ASTM E329 and ASTM D3740 for testing indicated.

1.7 DELIVERY, STORAGE, AND HANDLING

A. When necessary, store materials on site in advance of need.

1.8 FIELD CONDITIONS

A. Traffic: Minimize interference with adjoining roads, streets, walks, and other adjacent occupied or used facilities during earth-moving operations.
   1. Do not close or obstruct streets, walks, or other adjacent occupied or used facilities without permission from Owner and authorities having jurisdiction.
   2. Provide alternate routes around closed or obstructed traffic ways if required by Owner or authorities having jurisdiction.

B. Utility Locator Service: Notify UDig NY for area where Project is located before beginning earth-moving operations.

PART 2 PRODUCTS

2.1 FILL MATERIALS

A. General: Provide borrow soil materials when sufficient satisfactory soil materials are not available from excavations.

B. Satisfactory Soils: Soil Classification Groups GW, GP, GM, SW, SP, and SM according to ASTM D2487, or a combination of these groups; free of rock or gravel larger than 3 inches in any dimension, debris, waste, frozen meterials, vegetation, and other deleterious matter.

C. Unsatisfactory Soils: Soil Classification Groups GC, SC, CL, ML, OL, CH, MH, OH, and PT according to ASTM D2487, or a combination of these groups.
   1. Unsatisfactory soils also include satisfactory soils not maintained within 2 percent of optimum moisture content at time of compaction.

D. Subbase Material: Naturally or artificially graded mixture of natural or crushed gravel, crushed stone, and natural or crushed sand; ASTM D2940/D2940M; with at least 90 percent passing a 1-1/2-inch (37.5-mm) sieve and not more than 12 percent passing a No. 200 (0.075-mm) sieve.

E. Engineered Fill: Naturally or artificially graded mixture of natural or crushed gravel, crushed stone, and natural or crushed sand; ASTM D2940/D2940M; with at least 90 percent passing a 1-1/2-inch (37.5-mm) sieve and not more than 12 percent passing a No. 200 (0.075-mm) sieve.

F. Bedding Course: Naturally or artificially graded mixture of natural or crushed gravel, crushed stone, and natural or crushed sand; ASTM D2940/D2940M; except with 100 percent passing a 1-inch (25-mm) sieve and not more than 8 percent passing a No. 200 (0.075-mm) sieve.

2.2 ACCESSORIES

A. Geotextile: Non-biodegradable, woven.

B. Vapor Retarder: 10 mil thick, polyethylene.

2.3 SOURCE QUALITY CONTROL

A. See Section 014000 - Quality Requirements, for general requirements for testing and analysis of soil material.

B. If tests indicate materials do not meet specified requirements, change material and retest.

PART 3 EXECUTION

3.1 EXAMINATION

A. Identify required lines, levels, contours, and datum locations.

B. Verify areas to be filled are not compromised with surface or ground water.

3.2 PREPARATION

A. Notify Architect when excavations have reached required subgrade.

B. Reconstruct subgrades damaged by freezing temperatures, frost, rain, accumulated water, or construction activities, as directed by Testing Agency, without additional compensation.

C. Cut out soft areas of subgrade not capable of compaction in place. Backfill with engineered fill ____.

D. Compact subgrade to density equal to or greater than requirements for subsequent fill material.

E. Until ready to fill, maintain excavations and prevent loose soil from falling into excavation.

3.3 STORAGE OF SOIL MATERIALS

A. Stockpile borrow soil materials and excavated satisfactory soil materials without intermixing. Place, grade, and shape stockpiles to drain surface water. Cover to prevent windblown dust.

3.4 FILLING

A. Fill to contours and elevations indicated using unfrozen materials.

B. Fill up to subgrade elevations unless otherwise indicated.

C. Employ a placement method that does not disturb or damage other work.

D. Maintain optimum moisture content of fill materials to attain required compaction density.

E. Correct areas that are over-excavated.

F. Compaction Density Unless Otherwise Specified or Indicated:
1. Under slabs-on-grade and similar construction: 95 percent of maximum dry density.

G. Reshape and re-compact fills subjected to vehicular traffic.

H. Maintain temporary means and methods, as required, to remove all water while fill is being placed as required, or until directed by the Architect. Remove and replace soils deemed unsuitable by classification and which are excessively moist due to lack of dewatering or surface water control.

3.5 UTILITY TRENCH BACKFILL

A. Place backfill on subgrades free of mud, frost, snow, or ice.

B. Place and compact bedding course on trench bottoms and where indicated. Shape bedding course to provide continuous support for bells, joints, and barrels of pipes and for joints, fittings, and bodies of conduits.

C. Initial Backfill:

1. Soil Backfill: Place and compact initial backfill of subbase material, free of particles larger than 1 inch in any dimension, to a height of 12 inches over the pipe or conduit.
   a. Carefully compact initial backfill under pipe haunches and compact evenly up on both sides and along the full length of piping or conduit to avoid damage or displacement of piping or conduit. Coordinate backfilling with utilities testing.

D. Final Backfill:
1. Soil Backfill: Place and compact final backfill of satisfactory soil to final subgrade elevation.

E. Warning Tape: Install warning tape directly above utilities, 12 inches below finished grade, except 6 inches below subgrade under pavements and slabs.

3.6 FILL AT SPECIFIC LOCATIONS

A. Use general fill unless otherwise specified or indicated.

B. Structural Fill at all locations:
1. Maximum depth per lift: 6 inches, compacted.
2. Compact to minimum 95 percent of maximum dry density.

3.7 SOIL MOISTURE CONTROL

A. Uniformly moisten or aerate subgrade and each subsequent fill or backfill soil layer before compaction to within 2 percent of optimum moisture content.
1. Do not place backfill or fill soil material on surfaces that are muddy, frozen, or contain frost or ice.
2. Remove and replace, or scarify and air dry, otherwise satisfactory soil material that exceeds optimum moisture content by 2 percent and is too wet to compact to specified dry unit weight.

3.8 TOLERANCES

A. Top Surface of General Filling: Plus or minus 1 inch from required elevations.

B. Top Surface of Filling Under Interior Slab-on-Grade: Plus or minus1/2 inch from required elevations.

3.9 FIELD QUALITY CONTROL

A. See Section 014000 - Quality Requirements , for general requirements for field inspection and testing.

B. Allow testing agency to inspect and test subgrades and each fill or backfill layer. Proceed with subsequent earth moving only after test results for previously completed work comply with requirements.

C. When testing agency reports that subgrades, fills, or backfills have not achieved degree of compaction specified, scarify and moisten or aerate, or remove and replace soil materials to depth required; recompact and retest until specified compaction is obtained.

D. Soil Fill Materials:
   1. Perform compaction density testing on compacted fill in accordance with ASTM D1556, ASTM D2167, or ASTM D6938.
   2. Evaluate results in relation to compaction curve determined by testing uncompacted material in accordance with ASTM D698 ("standard Proctor"), ASTM D1557 ("modified Proctor"), or AASHTO T 180.
   3. If tests indicate work does not meet specified requirements, remove work, replace and retest.

E. Frequency of Tests: _____.
   1. Building Slab Areas: At subgrade and at each compacted fill and backfill layer, at least one test for every 100 SF or less of paved area or building slab but in no case fewer than three tests.
   2. Trench Backfill: At each compacted initial and final backfill layer, at least one test for every 50 ft or less of trench length but no fewer than two tests.

3.10 CLEANING

A. Remove unused stockpiled materials, leave area in a clean and neat condition. Grade stockpile area to prevent standing surface water.

END OF SECTION 312323

APPENDIX A

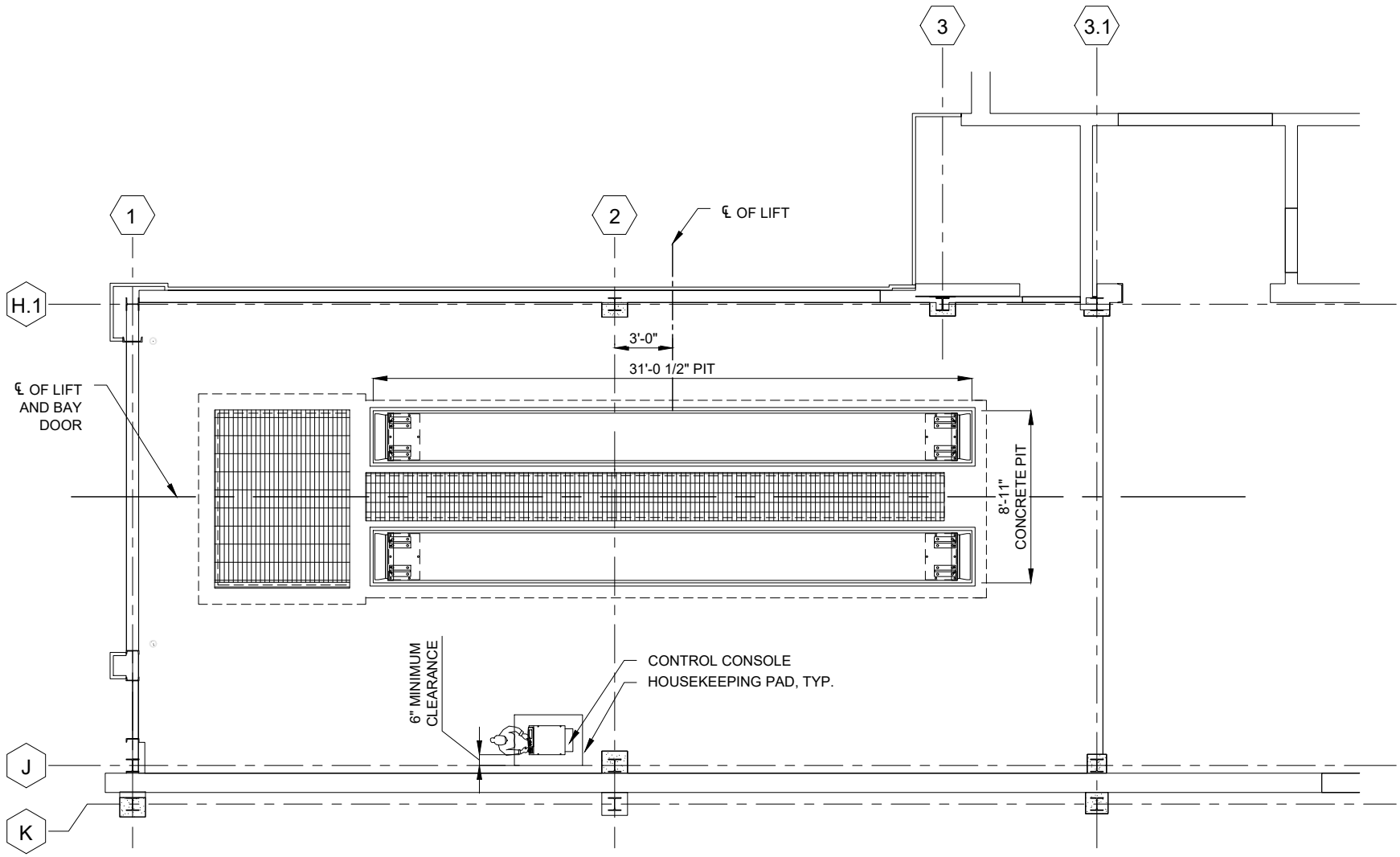

IN BAY PLAN

NOT FOR CONSTRUCTION

PRELIMINARY

APPROVED BY:	REVISIONS			
SIGNATURE:	P01	SKU-2025-1223A-ADM-P00	1/6/2025	ADM
PRINT NAME:				
DATE:				

PROJECT: PVTA, UMass Transit Facility, MA

LIFT INSTALLER: City Lift & Lube

DESCRIPTION: SKYLIFT 780-9 Flush Mount
No Automatic Pit Covers

SKU-2025-1223A-ADM-P01

STERTIL-KONI USA, INC.
200 LOG CANOE CIRCLE, STEVENSVILLE, MD 21666
TEL. 800-336-6637

DRAWN BY	ADM	12/23/2025	NOT TO SCALE
CHECKED BY	TMK	12/23/2025	SHEET 1 OF 7

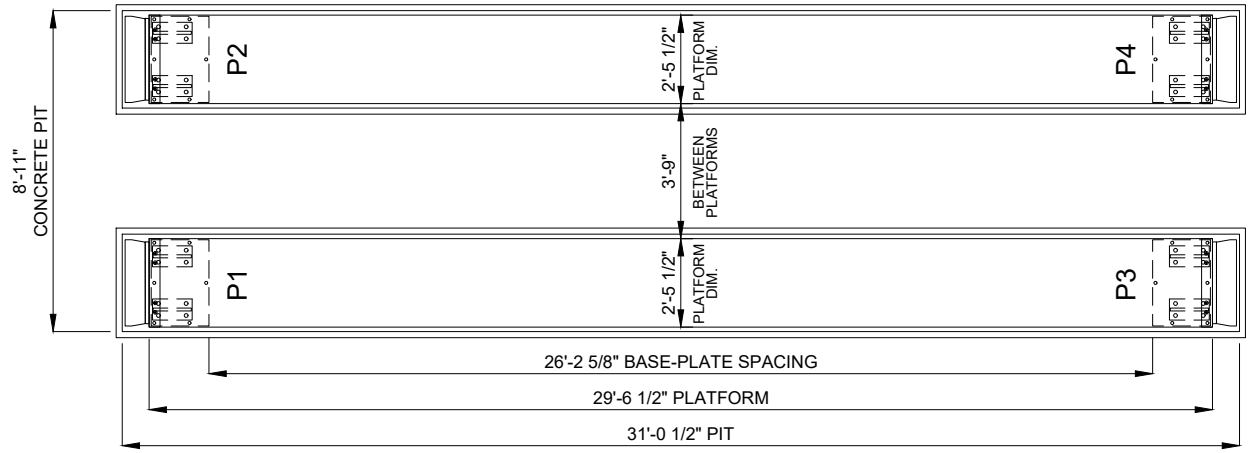

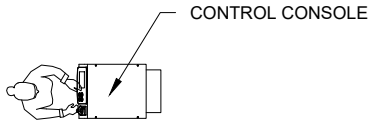

SKYLIFT PLAN

NOT FOR CONSTRUCTION

PRELIMINARY

APPROVED BY:	REVISIONS			
SIGNATURE:	P01	SKU-2025-1223A-ADM-P00	1/6/2025	ADM
PRINT NAME:				
DATE:				

PROJECT: PVTA, UMass Transit Facility, MA

LIFT INSTALLER: City Lift & Lube

DESCRIPTION: SKYLIFT 780-9 Flush Mount
No Automatic Pit Covers

SKU-2025-1223A-ADM-P01

STERTIL-KONI USA, INC.
200 LOG CANOE CIRCLE, STEVENSVILLE, MD 21666
TEL. 800-336-6637

DRAWN BY	ADM	12/23/2025	NOT TO SCALE
CHECKED BY	TMK	12/23/2025	SHEET 2 OF 7

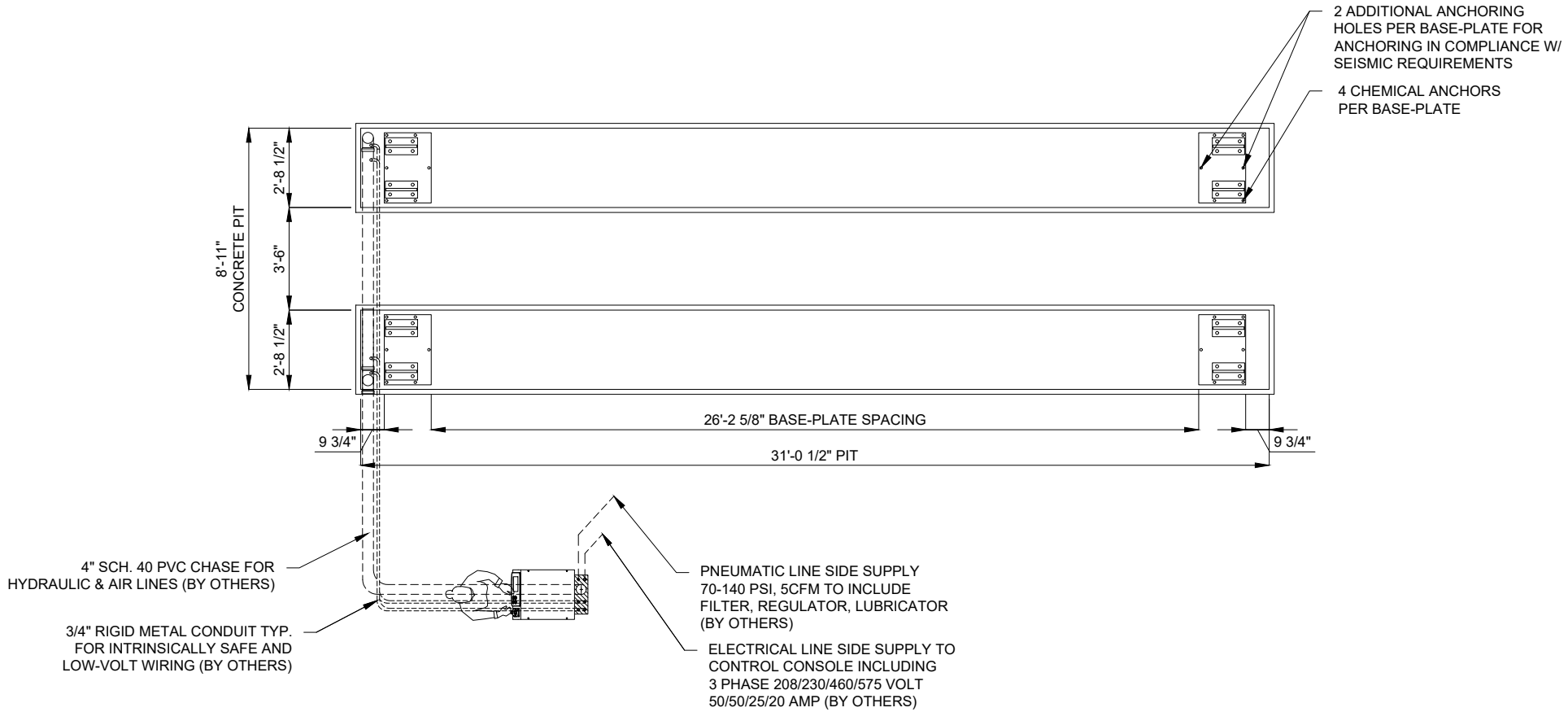

NOTE: PITS ARE **NOT** DIMENSIONED TO ACCOMMODATE AUTOMATIC PIT COVERS

CONCRETE & CONDUIT PLAN

NOT FOR CONSTRUCTION

PRELIMINARY

APPROVED BY:	REVISIONS			
SIGNATURE:	P01	SKU-2025-1223A-ADM-P00	1/6/2025	ADM
PRINT NAME:				
DATE:				

PROJECT: PVTA, UMass Transit Facility, MA

LIFT INSTALLER: City Lift & Lube

DESCRIPTION: SKYLIFT 780-9 Flush Mount
No Automatic Pit Covers

SKU-2025-1223A-ADM-P01

STERTIL-KONI USA, INC.
200 LOG CANOE CIRCLE, STEVENSVILLE, MD 21666
TEL. 800-336-6637

DRAWN BY	ADM	12/23/2025	NOT TO SCALE
CHECKED BY	TMK	12/23/2025	SHEET 3 OF 7

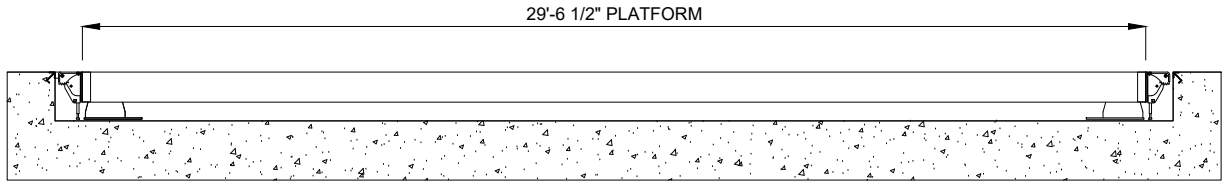

RETRACTED VIEW

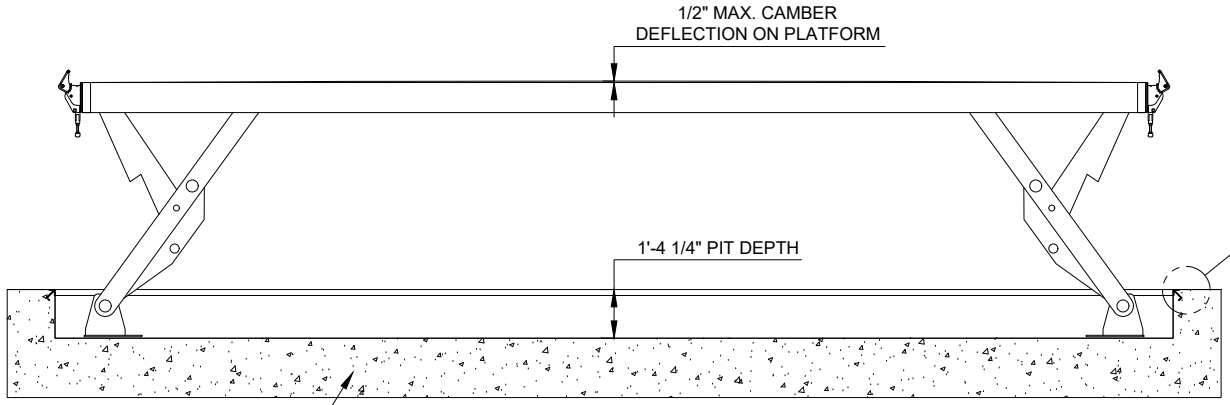

EXTENDED VIEW

REINFORCED CONCRETE
MIN. 6" THICK, #4 BAR, 12" O.C.
BOTH WAYS (NOT SHOWN)

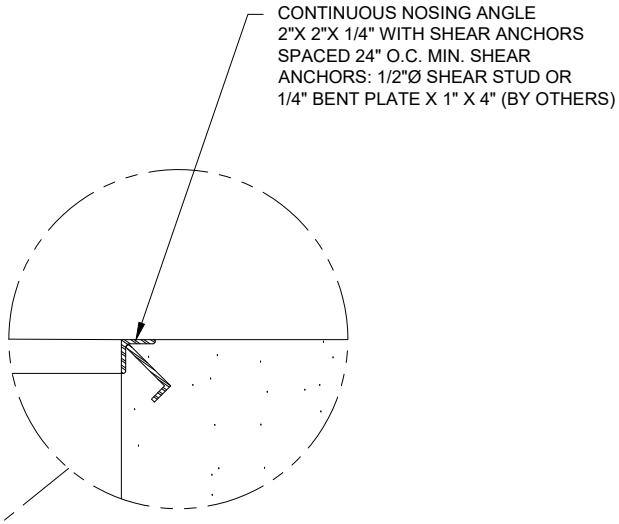

SECTION THROUGH PIT WALL

ELEVATION

NOT FOR CONSTRUCTION

PRELIMINARY

APPROVED BY:	REVISIONS			
SIGNATURE:	P01	SKU-2025-1223A-ADM-P00	1/6/2025	ADM
PRINT NAME:				
DATE:				

PROJECT: PVTA, UMass Transit Facility, MA

LIFT INSTALLER: City Lift & Lube

DESCRIPTION: SKYLIFT 780-9 Flush Mount
No Automatic Pit Covers

SKU-2025-1223A-ADM-P01

STERTIL-KONI USA, INC.
200 LOG CANOE CIRCLE, STEVENSVILLE, MD 21666
TEL. 800-336-6637

DRAWN BY	ADM	12/23/2025	NOT TO SCALE
CHECKED BY	TMK	12/23/2025	SHEET 4 OF 7

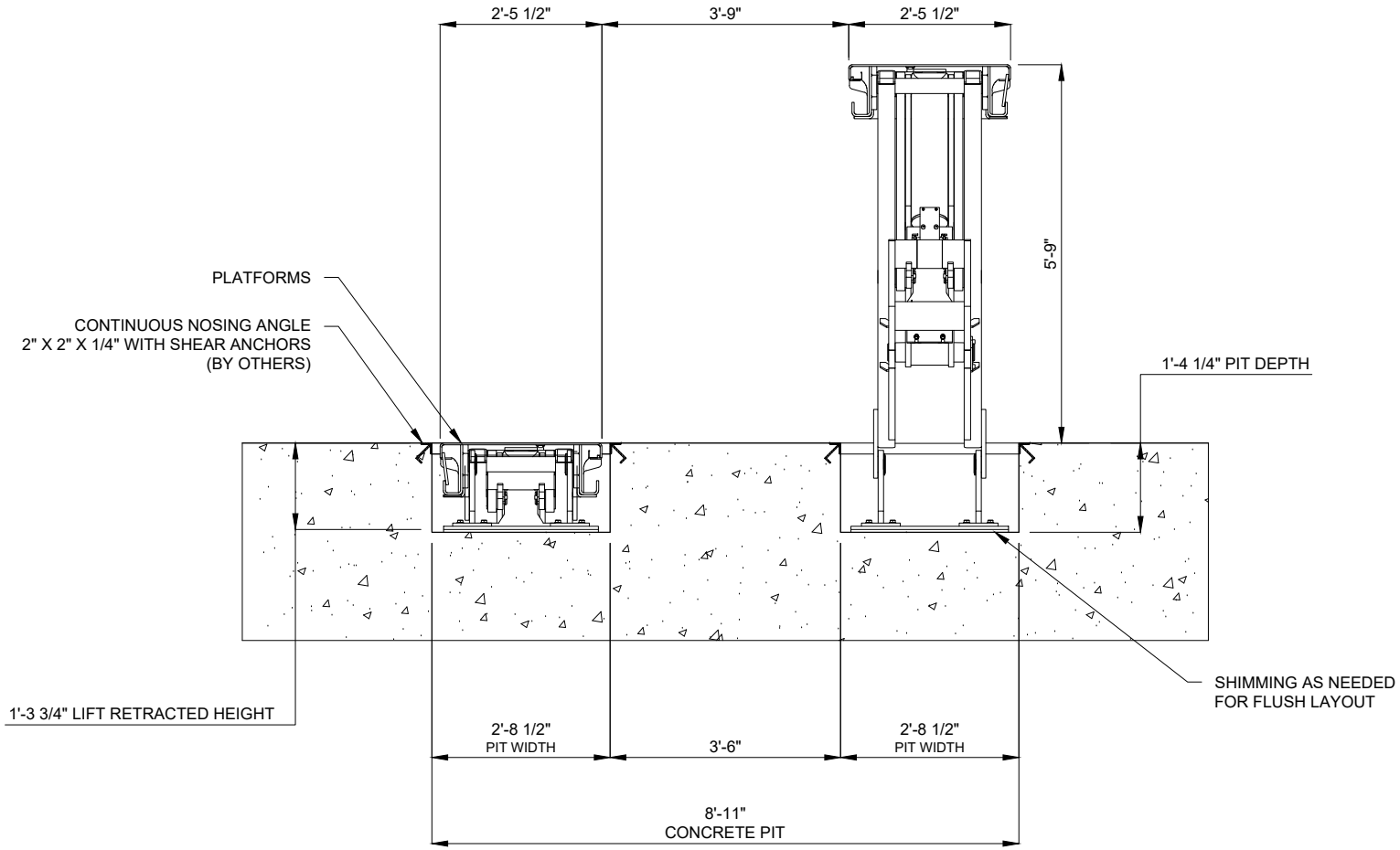

NOTE: PITS ARE **NOT** DIMENSIONED TO ACCOMMODATE AUTOMATIC PIT COVERS

SECTION

NOT FOR CONSTRUCTION

PRELIMINARY

APPROVED BY:	REVISIONS			
SIGNATURE:	P01	SKU-2025-1223A-ADM-P00	1/6/2025	ADM
PRINT NAME:				
DATE:				

PROJECT: PVTA, UMass Transit Facility, MA

LIFT INSTALLER: City Lift & Lube

DESCRIPTION: SKYLIFT 780-9 Flush Mount
No Automatic Pit Covers

SKU-2025-1223A-ADM-P01

STERTIL-KONI USA, INC.
200 LOG CANOE CIRCLE, STEVENSVILLE, MD 21666
TEL. 800-336-6637

DRAWN BY	ADM	12/23/2025	NOT TO SCALE
CHECKED BY	TMK	12/23/2025	SHEET 5 OF 7

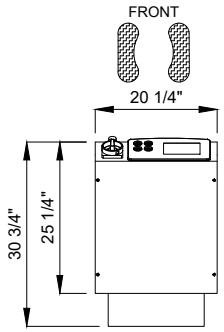

CONTROL CONSOLE

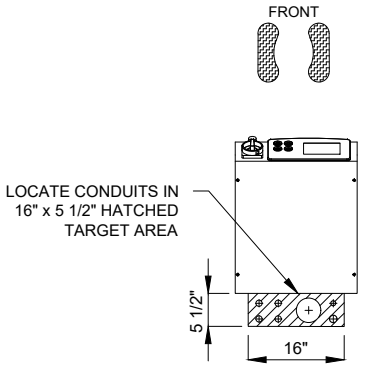

INTERNAL CONDUITS

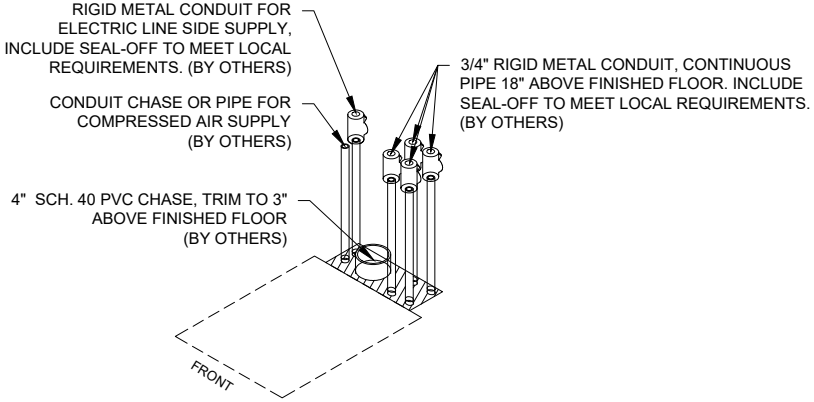

ISOMETRIC VIEW OF CONDUITS
AT CONTROL CONSOLE

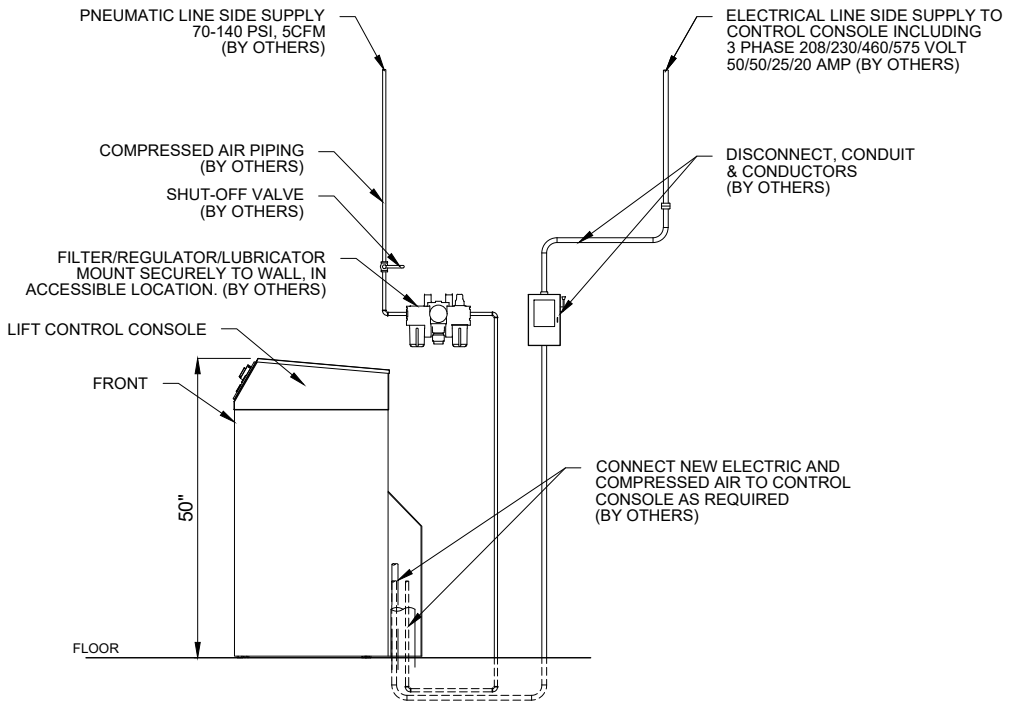

AIR & ELECTRICAL SERVICES AT CONSOLE

ebright CONTROL CONSOLE DETAILS

NOTE: HOUSEKEEPING DETAILS NOT SHOWN

NOT FOR CONSTRUCTION

PRELIMINARY

APPROVED BY:	REVISIONS			
SIGNATURE:	P01	SKU-2025-1223A-ADM-P00	1/6/2025	ADM
PRINT NAME:				
DATE:				

PROJECT: PVTA, UMass Transit Facility, MA

LIFT INSTALLER: City Lift & Lube

DESCRIPTION: SKYLIFT 780-9 Flush Mount
No Automatic Pit Covers

SKU-2025-1223A-ADM-P01

STERTIL-KONI USA, INC.
200 LOG CANOE CIRCLE, STEVENSVILLE, MD 21666
TEL. 800-336-6637

DRAWN BY	ADM	12/23/2025	NOT TO SCALE
CHECKED BY	TMK	12/23/2025	SHEET 6 OF 7

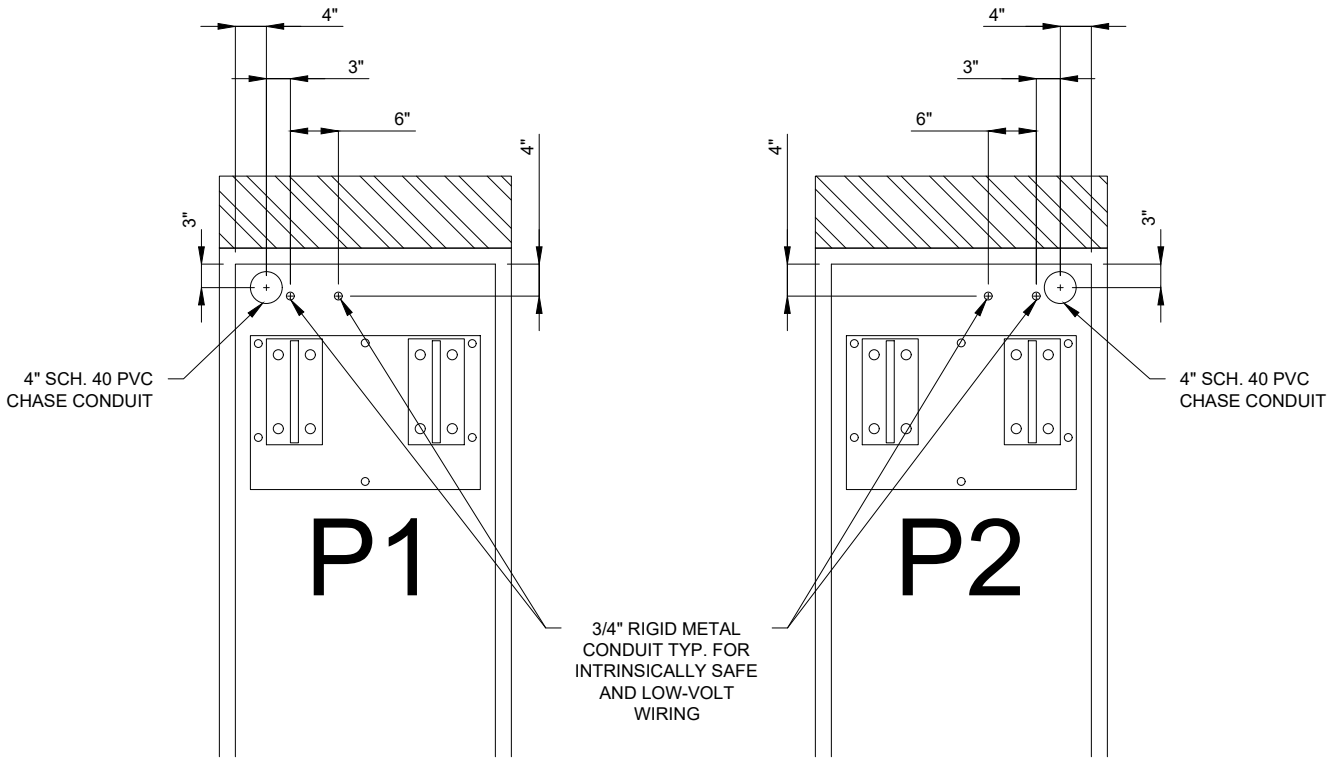

CONDUIT DETAILS AT BASEPLATE

NOT FOR CONSTRUCTION

PRELIMINARY

APPROVED BY:	REVISIONS			
SIGNATURE:	P01	SKU-2025-1223A-ADM-P00	1/6/2025	ADM
PRINT NAME:				
DATE:				

PROJECT: PVTA, UMass Transit Facility, MA

LIFT INSTALLER: City Lift & Lube

DESCRIPTION: SKYLIFT 780-9 Flush Mount
No Automatic Pit Covers

SKU-2025-1223A-ADM-P01

STERTIL-KONI USA, INC.
200 LOG CANOE CIRCLE, STEVENSVILLE, MD 21666
TEL. 800-336-6637

DRAWN BY	ADM	12/23/2025	NOT TO SCALE
CHECKED BY	TMK	12/23/2025	SHEET 7 OF 7

APPENDIX B

April 29, 2025

Mr. John Burke
Pioneer Valley Transit Authority
2808 Main Street
Springfield, MA 01107

Re: UMass Transit Garage
Hydraulic Lift Removal Project
185 Holdsworth Way
Amherst, Massachusetts

Dear Mr. Burke:

On behalf of the Pioneer Valley Transit Authority, (PVTA) Roux Associates, Inc. (Roux) has prepared this letter report documenting the results of a limited subsurface assessment program performed to assess environmental conditions at the location of an in-ground hydraulic lift scheduled for removal. The in-ground hydraulic lift is located at the northern end of the UMass Transit bus garage at 185 Holdsworth Way on the campus of UMass Amherst (the site). Note that the site is technically to the west of the Amherst municipal boundary and therefore is in Hadley Massachusetts. A Site Locus Plan is attached as **Figure 1**, and a Site Plan is attached as **Figure 2**.

Background

The hydraulic lift in question has been leaking hydraulic oil through the top seal of the lift piston, and repairs to the seal were unsuccessful. As a result, PVTA is preparing to remove the lift. In advance of removing the lift, PVTA retained Roux to collect soil and groundwater samples from around the lift to ascertain if impacted soil and groundwater may be encountered during the project that would require notification to the Massachusetts Department of Environmental Protection (MassDEP) and management of remediation waste under the Massachusetts Contingency Plan (MCP, 310 CMR 40.0000).

To appropriately evaluate data collected during the project, it is necessary to determine the applicable reporting categories for soil and groundwater at the site. The determination of the applicable soil reporting category is set forth at 310 CMR 40.0361, and the determination of the applicable groundwater reporting category is set forth at 310 CMR 40.0362.

The hydraulic lift is not located within 500 feet of a residential dwelling, a residentially-zoned property, a school (as defined in the MCP), playground, recreational area or park. Additionally, a review of the MassDEP Bureau of Waste Site Cleanup Phase I Site Assessment Map indicates the site is not located within a Current Drinking Water Source Area (e.g., a Zone II or Interim Wellhead Protection Area of a public water supply well, within 500 feet of a private water supply well) or within a Potential Drinking Water Source Area (e.g., potentially productive aquifer). As such, the applicable soil reporting category for the site is RCS-2 and the applicable groundwater reporting category is RCGW-2. A copy of the Phase I Site Assessment Map for the site is attached in **Appendix A**.

Assessment Program

Pre-fieldwork Site Visit – On March 11, 2025, representatives from UMass, PVTA, Roux, and Geosearch (drilling contractor) met at the site to review site conditions and determine soil boring locations. Three soil boring locations were selected inside the building based on providing coverage around the lift in areas that appeared to be free of obvious subsurface obstructions. Proposed soil locations were marked on the concrete floor and paint markings were placed outside the building as required for subsurface utility clearance / dig safe notification.

200 Summit Drive, Suite 500 ■ Burlington, Massachusetts 01803 ■ +1.781.569.4000 ■ www.rouxinc.com
California ■ Illinois ■ Massachusetts ■ New Jersey ■ New York ■ Texas ■ Virginia

Soil Assessment – On March 27, 2025, Roux mobilized at the site with personnel from Geosearch Drilling. The concrete floor slab was cored in each of the three locations (MW-1, MW-2 and MW-3), and a vacuum truck and hand auger were used to advance the soil borings in each location to a depth of approximately 4 to 5 feet below the top of the concrete floor slab to assess for potential conflicts from unmarked utilities. During the coring of MW-2, a metal conduit that was in contact with the underside of the concrete slab was encountered at the bottom of the concrete core.

Soil samples from the first 5 feet were collected using a hand auger, and soil samples collected below hand auger depth were collected using a direct push vibratory drill rig. Soil borings were advanced to a depth of 20 feet below grade. Soil samples were collected continuously in clear acetate sleeves during boring advancement and described in the field using a modified Burmister soil classification system. In general, subsurface conditions encountered during the drilling consisted of fine to coarse sand with trace amounts of gravel (interpreted as fill) to a depth of approximately 10 feet below grade, with interbedded sands, silts and clays below to a total depth of 20 feet below grade. Wet soil indicative of groundwater was encountered at approximately 10 to 11 feet below grade. A black coarse sand interpreted as coal ash was encountered in borings MW-2 and MW-3 at 13 feet below grade.

As the soil borings were advanced, soil samples were collected and screened in the field for volatile organic compounds (VOCs) using a photoionization detector. In general, positive PID screening results above background (e.g., 1.0 parts per million by volume, or ppmv) were not detected in the soil samples screened for headspace VOCs. Additionally, since hydraulic oil exhibits low odor and almost no volatility, select soil samples from the borings were screened in the field using an oil-in-soil test kit as a further check for the presence of oil. Of the six oil-in-soil tests performed, none of the test samples indicated the presence of significant concentrations of hydrocarbons. The results of the PID screening and the oil-in-soil test kits are shown on the soil boring logs, which are attached in **Appendix B**.

Following the completion of each boring, a 2-inch diameter PVC groundwater monitoring well was installed in each borehole. The wells were completed with 10 feet of screen positioned to intersect the groundwater table observed during drilling. Well constructions details are shown on the soil boring logs attached in **Appendix B**. On the same day as installation, the monitoring wells were developed to remove fines from the filter pack by over pumping until the purge water wells ran clear. Excess soil from the monitoring well installation process and groundwater purged from the wells during development were placed into two separate 55-gallon drums staged on-site pending management during the lift replacement project.

Based on sample locations, 2 soil samples from each of the three soil borings (for a total of 6 soil samples) were submitted to Pace Analytical Laboratory (Pace), where they were analyzed for extractable petroleum hydrocarbons (EPH) and polychlorinated biphenyls (PCBs). Analytical results are summarized in **Table 1**, and the lab data report is attached in **Appendix C**. As indicated in **Table 1**, EPH fractional ranges C19-C36 aliphatic hydrocarbons and C11-C22 aromatic hydrocarbons were detected in two soil samples at concentrations less than applicable reportable concentrations listed in the MCP at 310 CMR 40.1600.

Groundwater Assessment – On April 4, 2025, a Roux geologist returned to the site to collect groundwater samples. Prior to sampling, depth-to-groundwater and the presence of light non-aqueous phase liquid hydrocarbons (LNAPL) were gauged with an interface probe. No LNAPL was detected in the monitoring wells. Groundwater was encountered at approximately 15 feet below grade in MW-1 and MW-3, and 11 feet below grade in MW-2. Groundwater samples were collected using low flow sampling techniques, whereby low pumping rates are used to minimize hydraulic stresses on the well while monitoring and recording water quality parameters for stability to reduce turbidity and the potential entrainment of sediment in the samples during collection. Groundwater sampling logs are attached in **Appendix D**.

Groundwater samples were collected into laboratory supplied containers and transported under chain-of-custody procedures to Pace, where they were analyzed for EPH and PCBs. EPH and PCBs were not detected in the samples. Sample-specific analytical detection limits for each of the EPH constituents and PCB isomers analyzed are presented in **Table 2**, and the laboratory data report is attached in **Appendix C**.

Assessment Summary – Roux assessed soil and groundwater quality in the immediate vicinity of an in-ground hydraulic lift proposed for replacement. No evidence of significant volatile organic compounds or petroleum hydrocarbons was identified during the collection and screening of samples in the field using a PID and oil-in-soil field test kits. No evidence of EPH or PCBs in groundwater was identified in groundwater samples analyzed for those constituents. EPH fractional ranges C19-C36 aliphatics and C11-C22 aromatics were identified in 2 soil samples at concentrations that are below applicable Reportable Concentrations listed in the MCP and notification to MassDEP of these conditions is not required.

The EPH detections appear to be associated with a black coarse sand observed in the samples collected from the borings at approximately 13 feet below grade. A sample of this material from 14 feet below grade in MW-2 was screened using an oil-in-soil field test kit, with a negative result, indicating the EPH detected in the samples may be from a non-petroleum source. We note that the UMass campus utilized a coal-fired power plant to power the campus for many decades before a new natural gas fired power plant was completed in approximately 2010. Given the long history of coal use at the campus, the coarse black sand is interpreted as coal ash. Although Roux did not perform a microscopic analysis of the material, the presence of coal ash in this portion of the campus is consistent with the history of the UMass campus.

The detection of EPH fractional ranges in soil at concentrations less than applicable reportable concentrations are not subject to reporting to MassDEP under the MCP. Additionally, the detections may be related to coal ash, and the MCP includes specific exemptions for reporting coal ash related "releases".

Soil and Groundwater Management Recommendations

Based on the information obtained during this assessment, soil excavated from the lift removal project is environmentally suitable to be placed back into the excavation following lift replacement. Groundwater that may need to be managed during the project is environmentally suitable for being placed back into the excavation (if feasible). Soil and groundwater containerized during monitoring well installation and staged on-site should be placed in the lift removal excavation.

If excess soil generated as part of the lift project requires off-site management, we recommend that the excess soil be generated from the brown sand and gravel fill located between 1 and 10 feet below grade that overlies the presumed coal ash at 13 feet below grade. While the deeper soils containing presumed coal ash may not be regulated under the MCP, coal-ash bearing soil is not appropriate for uncontrolled reuse in sensitive environmental settings where it could be exposed at the ground surface.

Conclusion

We appreciate the opportunity to assist PVTA with environmental assessment for the upcoming lift replacement project. Please let us know if you have any questions regarding this report or our soil and groundwater management recommendations. Thank you.

Sincerely,

ROUX ASSOCIATES, INC.

Nicole Hudson, CHMM
Senior Geologist

Edward J. Weagle, LSP, LEP, CHMM
Principal Geologist

Attachments:

Table 1	Soil Analytical Results
Table 2	Groundwater Analytical Results
Figure 1	Site Locus
Figure 2	Site Plan
Appendix A	Priority Resources Map
Appendix B	Soil Boring Logs
Appendix C	Lab Data Reports
Appendix D	Groundwater Sampling Records

TABLES

1. Soil Analytical Results
2. Groundwater Analytical Results

Table 1 - Soil Analytical Results
Extractable Petroleum Hydrocarbons (EPH) and Polychlorinated Biphenyls (PCBs)
PVTA Umass Bus Garage Lift Assessment
185 Holdsworth Way
Amherst, Massachusetts

Parameter	Reportable Concentrations in mg/kg (RCs)	SAMPLING LOCATION					
Sampling Date Sample Depth	RCS-2	SB-001 (8-10) 3/27/2025 8-10 Feet	SB-001 (13-15) 3/27/2025 13-15 Feet	SB-002 (11-13) 3/27/2025 11-13 Feet	SB-002 (13-15) 3/27/2025 13-15 Feet	SB-003 (8-10) 3/27/2025 8-10 Feet	SB-003 (12-13) 3/27/2025 12-13 Feet
MADEP EPH rev 2.1 (mg/Kg dry)							
C9-C18 ALIPHATICS	3000	ND (11)	ND (11)	ND (12)	ND (110)	ND (11)	ND (11)
C19-C36 ALIPHATICS	5000	ND (11)	ND (11)	ND (12)	590	ND (11)	17
C11-C22 AROMATICS	3000	ND (11)	ND (11)	ND (12)	650	ND (11)	20
ACENAPHTHENE	3000	ND (0.11)	ND (0.11)	ND (0.12)	ND (1.1)	ND (0.11)	ND (0.11)
ACENAPHTHYLENE	10	ND (0.11)	ND (0.11)	ND (0.12)	ND (1.1)	ND (0.11)	ND (0.11)
ANTHRACENE	3000	ND (0.11)	ND (0.11)	ND (0.12)	ND (1.1)	ND (0.11)	ND (0.11)
BENZO(A)ANTHRACENE	300	ND (0.11)	ND (0.11)	ND (0.12)	ND (1.1)	ND (0.11)	ND (0.11)
BENZO(A)PYRENE	30	ND (0.11)	ND (0.11)	ND (0.12)	ND (1.1)	ND (0.11)	ND (0.11)
BENZO(B)FLUORANTHENE	300	ND (0.11)	ND (0.11)	ND (0.12)	ND (1.1)	ND (0.11)	ND (0.11)
BENZO(G,H,I)PERYLENE	3000	ND (0.11)	ND (0.11)	ND (0.12)	ND (1.1)	ND (0.11)	ND (0.11)
BENZO(K)FLUORANTHENE	3000	ND (0.11)	ND (0.11)	ND (0.12)	ND (1.1)	ND (0.11)	ND (0.11)
CHRYSENE	3000	ND (0.11)	ND (0.11)	ND (0.12)	ND (1.1)	ND (0.11)	ND (0.11)
DIBENZ(a,h)ANTHRACENE	30	ND (0.11)	ND (0.11)	ND (0.12)	ND (1.1)	ND (0.11)	ND (0.11)
FLUORANTHENE	3000	ND (0.11)	ND (0.11)	ND (0.12)	ND (1.1)	ND (0.11)	ND (0.11)
FLUORENE	3000	ND (0.11)	ND (0.11)	ND (0.12)	ND (1.1)	ND (0.11)	ND (0.11)
INDENO(1,2,3-CD)PYRENE	300	ND (0.11)	ND (0.11)	ND (0.12)	ND (1.1)	ND (0.11)	ND (0.11)
2-METHYLNAPHTHALENE	80	ND (0.11)	ND (0.11)	ND (0.12)	ND (1.1)	ND (0.11)	ND (0.11)
NAPHTHALENE	20	ND (0.11)	ND (0.11)	ND (0.12)	ND (1.1)	ND (0.11)	ND (0.11)
PHENANTHRENE	1000	ND (0.11)	ND (0.11)	ND (0.12)	ND (1.1)	ND (0.11)	ND (0.11)
PYRENE	3000	ND (0.11)	ND (0.11)	ND (0.12)	ND (1.1)	ND (0.11)	ND (0.11)
SM 2540G (% Wt)							
% Solids	~	93.6	92.0	85.0	86.5	89.8	88.1
SW-846 8082A (mg/Kg dry)							
PCB 1016	4	ND (0.085)	ND (0.085)	ND (0.094)	ND (0.091)	ND (0.089)	ND (0.089)
PCB 1221	4	ND (0.085)	ND (0.085)	ND (0.094)	ND (0.091)	ND (0.089)	ND (0.089)
PCB 1232	4	ND (0.085)	ND (0.085)	ND (0.094)	ND (0.091)	ND (0.089)	ND (0.089)
PCB 1242	4	ND (0.085)	ND (0.085)	ND (0.094)	ND (0.091)	ND (0.089)	ND (0.089)
PCB 1248	4	ND (0.085)	ND (0.085)	ND (0.094)	ND (0.091)	ND (0.089)	ND (0.089)
PCB 1254	4	ND (0.085)	ND (0.085)	ND (0.094)	ND (0.091)	ND (0.089)	ND (0.089)
PCB 1260	4	ND (0.085)	ND (0.085)	ND (0.094)	ND (0.091)	ND (0.089)	ND (0.089)
PCB 1262	4	ND (0.085)	ND (0.085)	ND (0.094)	ND (0.091)	ND (0.089)	ND (0.089)
PCB 1268	4	ND (0.085)	ND (0.085)	ND (0.094)	ND (0.091)	ND (0.089)	ND (0.089)

NOTES:

1. ND = Not detected above the lab reporting limits shown in parenthesis.

Table 2 - Groundwater Analytical Results
Extractable Petroleum Hydrocarbons (EPH) and Polychlorinated Biphenyls (PCBs)
PVTA Umass Bus Garage Lift Assessment
185 Holdsworth Way
Amherst, Massachusetts

Parameter	Reportable Concentrations in ug/l (RCs)	SAMPLING LOCATION		
Sampling Date	RCGW-2	MW-1 4/4/2025	MW-2 4/4/2025	MW-3 4/4/2025
MADEP EPH rev 2.1 (µg/L)				
C9-C18 ALIPHATICS	5000	ND (97)	ND (95)	ND (95)
C19-C36 ALIPHATICS	50000	ND (97)	ND (95)	ND (95)
C11-C22 AROMATICS	5000	ND (97)	ND (95)	ND (95)
ACENAPHTHENE	10000	ND (1.9)	ND (1.9)	ND (1.9)
ACENAPHTHYLENE	40	ND (1.9)	ND (1.9)	ND (1.9)
ANTHRACENE	30	ND (1.9)	ND (1.9)	ND (1.9)
BENZO(A)ANTHRACENE	1000	ND (1.9)	ND (1.9)	ND (1.9)
BENZO(A)PYRENE	500	ND (1.9)	ND (1.9)	ND (1.9)
BENZO(B)FLUORANTHENE	400	ND (1.9)	ND (1.9)	ND (1.9)
BENZO(G,H,I)PERYLENE	20	ND (1.9)	ND (1.9)	ND (1.9)
BENZO(K)FLUORANTHENE	100	ND (1.9)	ND (1.9)	ND (1.9)
CHRYSENE	70	ND (1.9)	ND (1.9)	ND (1.9)
DIBENZ(a,h)ANTHRACENE	40	ND (1.9)	ND (1.9)	ND (1.9)
FLUORANTHENE	200	ND (1.9)	ND (1.9)	ND (1.9)
FLUORENE	40	ND (1.9)	ND (1.9)	ND (1.9)
INDENO(1,2,3-CD)PYRENE	100	ND (1.9)	ND (1.9)	ND (1.9)
2-METHYLNAPHTHALENE	2000	ND (1.9)	ND (1.9)	ND (1.9)
NAPHTHALENE	700	ND (1.9)	ND (1.9)	ND (1.9)
PHENANTHRENE	10000	ND (1.9)	ND (1.9)	ND (1.9)
PYRENE	20	ND (1.9)	ND (1.9)	ND (1.9)
SW-846 8082A (µg/L)				
PCB 1016	5	ND (0.19)	ND (0.19)	ND (0.19)
PCB 1221	5	ND (0.19)	ND (0.19)	ND (0.19)
PCB 1232	5	ND (0.19)	ND (0.19)	ND (0.19)
PCB 1242	5	ND (0.19)	ND (0.19)	ND (0.19)
PCB 1248	5	ND (0.19)	ND (0.19)	ND (0.19)
PCB 1254	5	ND (0.19)	ND (0.19)	ND (0.19)
PCB 1260	5	ND (0.19)	ND (0.19)	ND (0.19)
PCB 1262	5	ND (0.19)	ND (0.19)	ND (0.19)
PCB 1268	5	ND (0.19)	ND (0.19)	ND (0.19)

NOTES:

1. ND = Not detected above the lab reporting limits shown in parenthesis.

FIGURES

1. Site Locus
2. Site Plan

T:\GIS_PROJECTS\4218\0002\000\MXDS\SITE LOCATION MAP.MXD

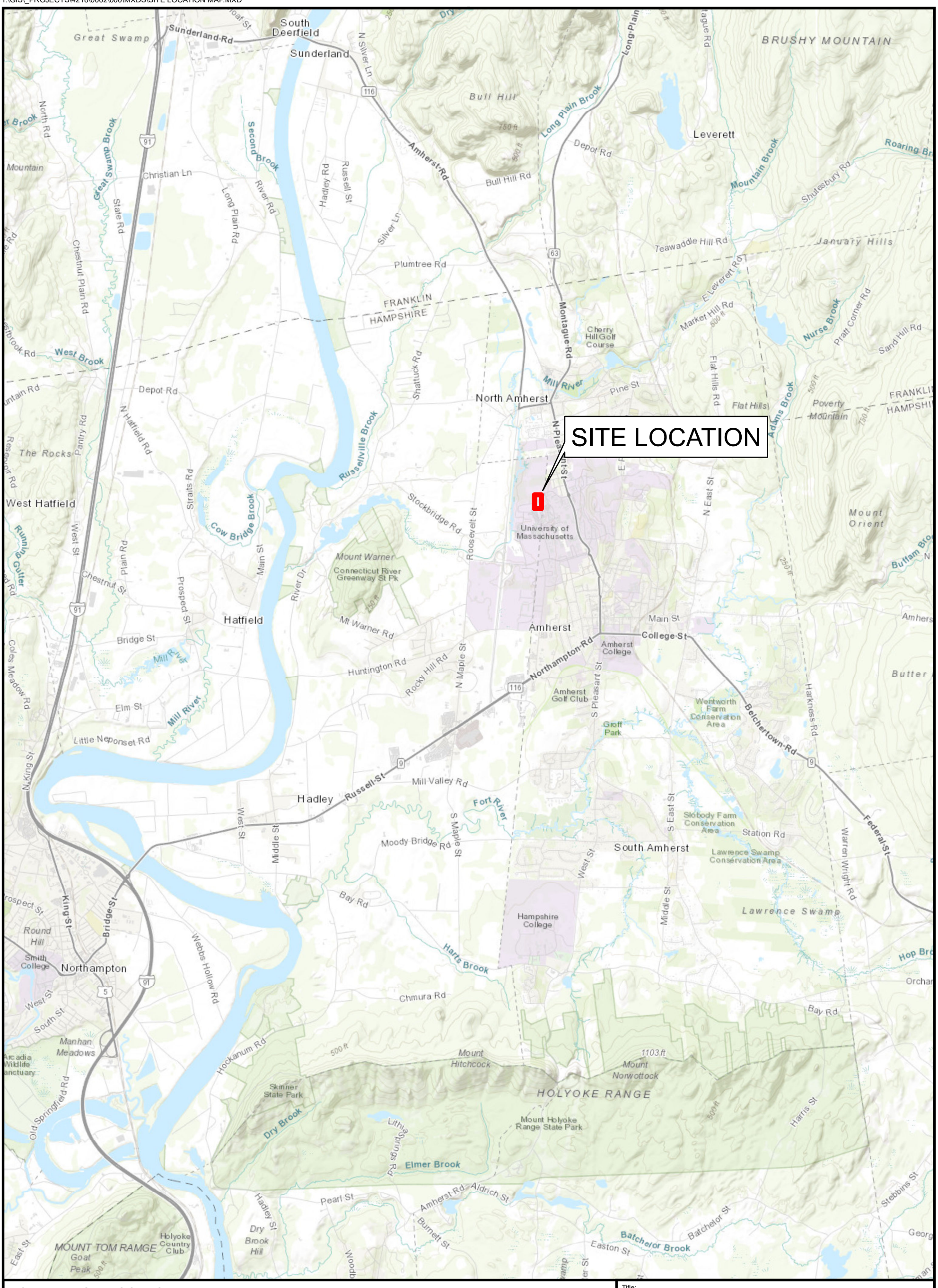

QUADRANGLE LOCATION

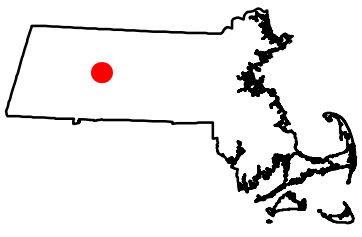

NOTES

- ALL LOCATIONS ARE APPROXIMATE.
- SERVICE LAYER CREDITS: SOURCES: ESRI, HERE, GARMIN, INTERMAP, INCREMENT P CORP., GEBCO, USGS, FAO, NPS, NRCAN, GEOBASE, IGN, KADASTER NL, ORDNANCE SURVEY, ESRI JAPAN, METI, ESRI CHINA (HONG KONG), (C) OPENSTREETMAP CONTRIBUTORS, AND THE GIS USER COMMUNITY

N

2 0 2Miles

Title:

PVTA UMASS AMHERST SITE LOCATION MAP

185 HOLDSWORTH WAY
AMHERST, MA 01002

Prepared for:

PVTA

ROUX

Compiled by: K.M	Date: 04/28/25	FIGURE
Prepared by: K.M	Scale: AS SHOWN	1
Project Mgr: N.H.	Project: 4218.0002M000	
File: Site Location Map.mxd		

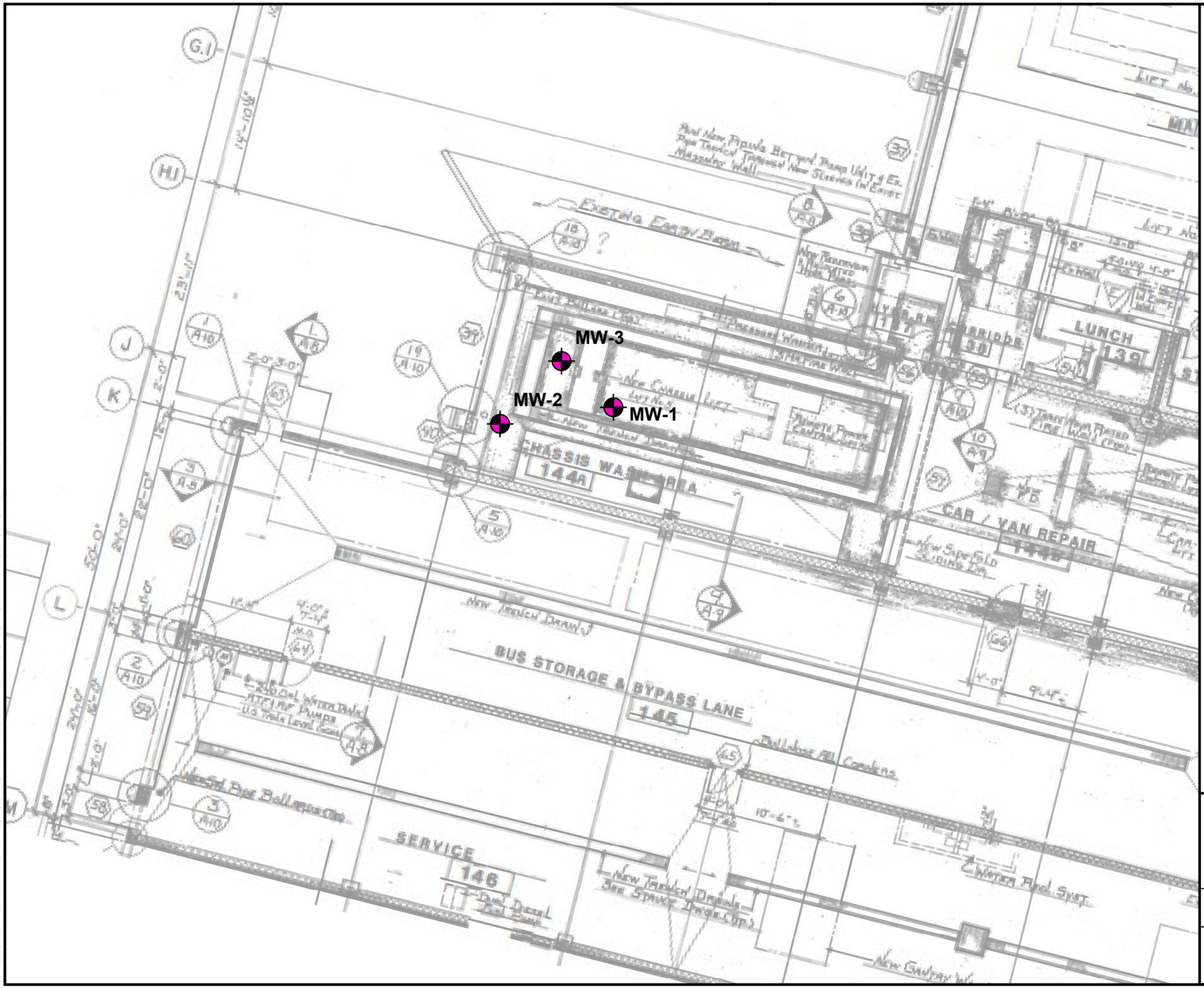

LEGEND

MONITORING WELL LOCATIONS

NOTES

- ALL LOCATIONS SHOWN ARE APPROXIMATE.
- SERVICE LAYER CREDITS: SOURCE: ESRI, MAXAR, EARTHSTAR GEOGRAPHICS, AND THE GIS USER COMMUNITY

N

10 0 10'

Title: **GROUNDWATER MONITORING WELLS INSTALLED MARCH 27, 2025**

185 HOLDSWORTH WAY
AMHERST, MA

Prepared for:

PVTA

ROUX

Compiled by: K.M.	Date: 04/18/25	FIGURE
Prepared by: K.M.	Scale: AS SHOWN	2
Project Mgr: N.H.	Project: 4218.0002M000	
File: Monitoring Well Sketch.mxd		

T:\PROJECTS\PVTA\UMASS AMHERST - 185 HOLDSWORTHS WAY\SUMMARY LETTER\MONITORING WELL SKETCH\MONITORING WELL SKETCH.MXD

APPENDICES

A. Priority Resources Map
B. Soil Boring Logs
C. Lab Data Reports
D. Groundwater Sampling Records

APPENDIX A

Priority Resources Map

MassDEP - Bureau of Waste Site Cleanup

Phase 1 Site Assessment Map: 500 feet & 0.5 Mile Radii

Site Information:
UMASS TRANSIT BUS GARAGE
HOLDSWORTH WAY AMHERST, MA

NAD83 UTM Meters:
4696536mN , 702985mE (Zone: 18)
April 22, 2025

The information shown is the best available at the date of printing. However, it may be incomplete. The responsible party and LSP are ultimately responsible for ascertaining the true conditions surrounding the site. Metadata for data layers shown on this map can be found at: https://www.mass.gov/orgs/massgis-bureau-of-geographic-information.

MassDEP
Commonwealth of Massachusetts
Department of Environmental Protection

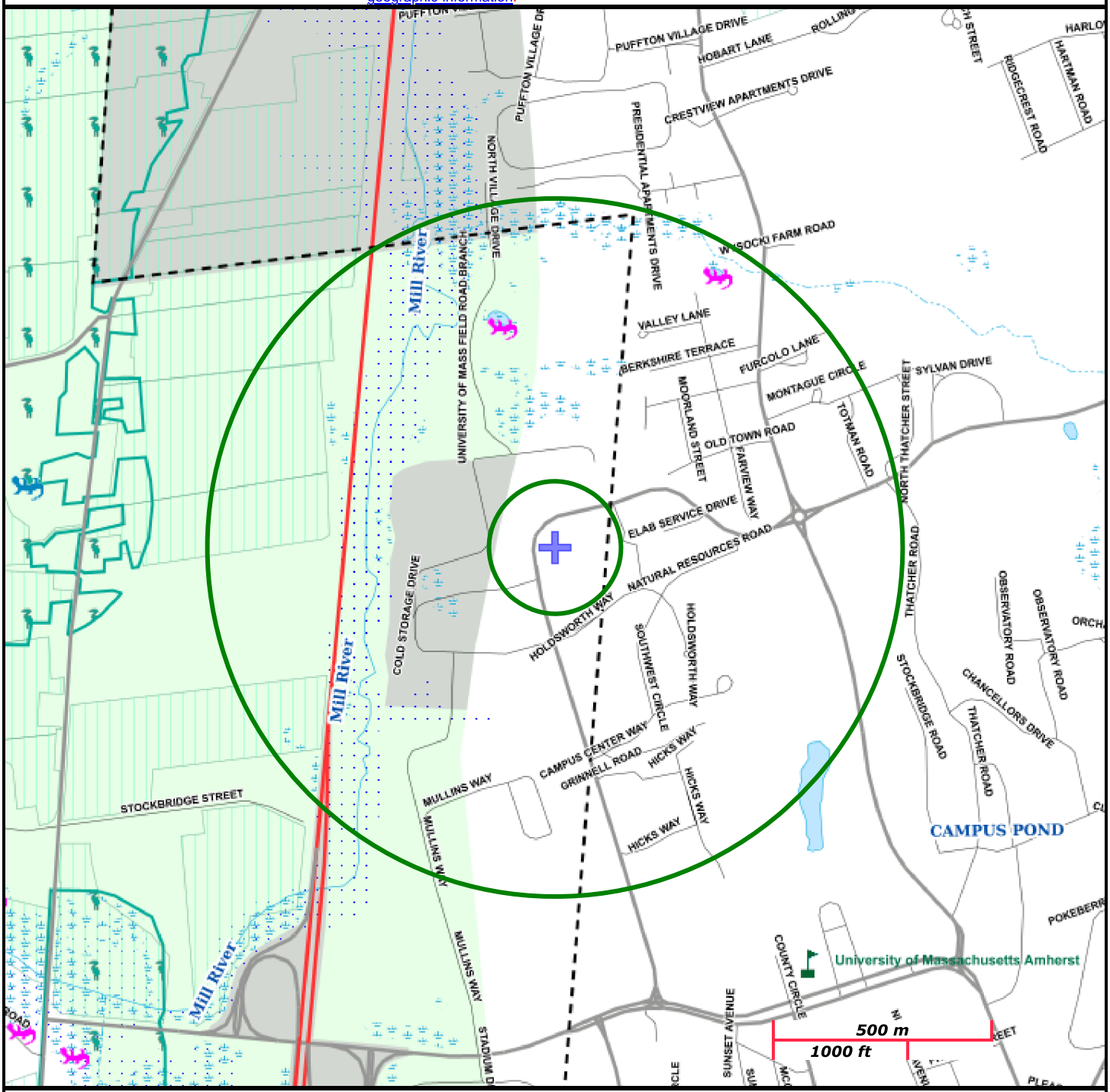

Roads: Limited Access, Divided, Other Hwy, Major Road, Minor Road, Track, Trail
Boundaries: Town, County, DEP Region; Train; Powerline; Pipeline; Aqueduct
Basins: Major, PWS; Streams: Perennial, Intermittent, Man Made Shore, Dam
Aquifers: Medium Yield, High Yield, EPA Sole Source
Non Potential Drinking Water Source Area: Medium, High (Yield)
PWS Protection Areas: Zone II, IWPA, Zone A
Hydrography: Open Water, PWS Reservoir, Tidal Flat
Wetlands: Freshwater, Saltwater, Cranberry Bog
FEMA 100yr Floodplain; Protected Open Space; ACEC
NHESP Pri-Hab of Rare Species; Vernal Pool: Cert., Potential
Solid Waste Landfill; PWS: Com.GW,SW, Emerg., Non-Com.

APPENDIX B

Soil Boring Logs

ROUX
200 Summit Drive
Suite 500
Burlington MA 01803
Telephone: (781)-569-4000
Fax: (781)-569-4001

WELL ID: SB-001

TOP - BOTTOM (T-B)

CLIENT: Pioneer Valley Transit Authority
SITE NAME/ADDRESS: 185 Holdsworth Way
CITY/STATE: Amherst, MA
DATE(S): 3/27/2025 - 3/27/2025
LOGGED BY: Kyle McCaffery

DRILLING CONTRACTOR: Geosearch, Inc.
DRILLING METHOD: Hand Tools/ Soil Vac/ Direct Push
SAMPLER TYPE: Hand Auger / Macro Core
BOREHOLE DIAMETER: 3 1/4"
WELL DIAM & MAT'L: 2" PVC

ANNULAR SEAL (T-B): 5 - 7
DIVIDER SEAL (T-B): NA
SAND PACK (T-B): 7 - 20
SCREEN (T-B): 9 - 19
WELL DEPTH: 19

DEPTH (ft)	Sample Interval	RECOVERY (ft)	PID (ppm)	MATERIAL DESCRIPTION	U.S.C.S.	WELL DIAGRAM	Notes
0				Concrete	--		
		0.5	0.3	Brown fine to coarse SAND, some fine Gravel; Dry.			
		1		Brown fine to coarse SAND, trace fine Grvel; Dry.			
		1	0.3	Brown fine to coarse SAND, trace fine Gravel, trace Silt; Dry.			
		1		Same as above.			
5		1	0.2	Red Brown fine to coarse SAND, trace fine gravel; Dry.			
		2	0.4	Brown fine to coarse SAND some fine Gravel; dry.	SW		
			0.4	Brown fine to coarse SAND; Damp.			SB-001 (8-10) Collected @ 1100. 8-10 Oil in Soil Kit (negative)
10				Brown fine to coarse SAND; Wet.			
		2	0.2	Black Gray fine SAND and Silt, some Clay; Wet.	SM		1" Black fine to coarse SAND st bottlon of 11'-12' interval.
			0.3	Gray SILT, some SAND, some Clay; Wet.	ML		SB-001 (13-15) Collected @ 1130.
15				Gray SILT, some Clay; Wet			
		2	0.7	Gray SILT and Clay; Organics; Wet.			
				Gray fine SAND; Wet.	SP		
			0.3	Black fine to coarse SAND; Wet.	SW		17-19 Oil in Soil Kit (negative)
20				Gray SILT; Organics; Wet.	ML		

Additional Notes: Bottom of borehole at 20.0 ft.

GENERAL BH / TP / WELL - GINT STD US.GDT - 3/31/25 16:30 - T:\PROJECTS\PVTA\UMASS AMHERST - 185 HOLDSWORTHS WAY\FIELD\MONITORING WELL INSTALL 3.27.25\GINT\PVTA_UMASS_.GPJ

ROUX
200 Summit Drive
Suite 500
Burlington MA 01803
Telephone: (781)-569-4000
Fax: (781)-569-4001

WELL ID: SB-002

TOP - BOTTOM (T-B)

CLIENT: Pioneer Valley Transit Authority
SITE NAME/ADDRESS: 185 Holdsworth Way
CITY/STATE: Amherst, MA
DATE(S): 3/27/2025 - 3/27/2025
LOGGED BY: Kyle McCaffery

DRILLING CONTRACTOR: Geosearch, Inc.
DRILLING METHOD: Hand Tools/ Soil Vac/ Direct Push
SAMPLER TYPE: Hand Auger / Macro Core
BOREHOLE DIAMETER: 3 1/4"
WELL DIAM & MAT'L: 2" PVC

ANNULAR SEAL (T-B): 5 - 7
DIVIDER SEAL (T-B): NA
SAND PACK (T-B): 7 - 20
SCREEN (T-B): 9 - 19
WELL DEPTH: 19

DEPTH (ft)	Sample Interval	RECOVERY (ft)	PID (ppm)	MATERIAL DESCRIPTION	U.S.C.S.	WELL DIAGRAM	Notes
0				Concrete.	--		
		0.5		Brown fine to coarse SAND, trace fine Gravel; Dry.			
		1	0.5	Same as above.			
		1		Brown fine to coarse SAND, some fine Gravel; Dry.			
		1	0.3	Same as above.			
5		1		Same as above.			
		2.5	0.4	Brown fine to coarse SAND, some fine Gravel; Dry.	SW		
10			0.2				
		3		Brown fine to coarse SAND, trace fine gravel; Damp.			SB-002 (11-13) Collected @ 1310 11-13 Oil in Soil Kit (Negative)
			0.2	Gray SILT, some Clay; Wet.	ML		
			0.3	Gray SILT and Black fine to coarse SAND; Interbeded; Wet.	SM		SB-002 (13-15) Collected @ 1330
15				Black fine to coarse SAND; Wet.	SW		14-15 Oil in Soil Kit (Negative)
		2		Brown SILT, some fine to coarse SAND; Wet.	SM		
			0.2	Brown fine to coarse SAND; Wet.	SW		
20							

Additional Notes: Bottom of borehole at 20.0 ft.

GENERAL BH / TP / WELL - GINT STD US.GDT - 3/31/25 16:30 - T:\PROJECTS\PVTA\UMASS AMHERST - 185 HOLDSWORTHS WAY\FIELD\MONITORING WELL INSTALL 3.27.25\GINT\PVTA_UMASS_.GPJ

ROUX
200 Summit Drive
Suite 500
Burlington MA 01803
Telephone: (781)-569-4000
Fax: (781)-569-4001

WELL ID: SB-003

TOP - BOTTOM (T-B)

CLIENT: Pioneer Valley Transit Authority
SITE NAME/ADDRESS: 185 Holdsworth Way
CITY/STATE: Amherst, MA
DATE(S): 3/27/2025 - 3/27/2025
LOGGED BY: Kyle McCaffery

DRILLING CONTRACTOR: Geosearch, Inc.
DRILLING METHOD: Hand Tools/ Soil Vac/ Direct Push
SAMPLER TYPE: Hand Auger / Macro Core
BOREHOLE DIAMETER: 3 1/4"
WELL DIAM & MAT'L: 2" PVC

ANNULAR SEAL (T-B): 5 - 7
DIVIDER SEAL (T-B): NA
SAND PACK (T-B): 7 - 20
SCREEN (T-B): 9 - 19
WELL DEPTH: 19

DEPTH (ft)	Sample Interval	RECOVERY (ft)	PID (ppm)	MATERIAL DESCRIPTION	U.S.C.S.	WELL DIAGRAM	Notes
0				Concrete	--		
		0.5	0.2	Brown fine to coarse SAND, trace fine Gravel; Dry.			
		1		Same as above.			
		1	0.2	Brown fine to coarse SAND, some fine Gravel; Dry.			
		1		Red Brown fine to coarse SAND, trace fine Gravel; Dry.			
5		1	0.2	Same as above.			
		2	0.3	Same as above.	SW		
10			0.3	Brown fine to coarse SAND, trace fine Gravel; Damp.			SB-003 (8-10) Collected @ 1200. (10-11) Oil in Soil Kit (Negative)
		2	0.3	Brown SILT and fine Sand; Wet	SM		2" Pink / White fine to coarse SAND; micaseous. Likely Cobble.
				Gray SILT; Wet.	ML		
			0.3	Black fine to coarse SAND; Wet.	SW		SB-003 (12-13) Collected @ 1230 (12-13) Oil in Soil Kit (Negative)
15				Gray SILT, some Clay, trace fine to coarse Sand; Wet.	ML		
		2	0.4	Brown fine to coarse SAND and Silt; Wet.			
				Gray fine to coarse SAND and Silt; Wet.	SM		
20			0.4				

Additional Notes:

Bottom of borehole at 20.0 ft.

GENERAL BH / TP / WELL - GINT STD US.GDT - 3/31/25 16:30 - T:\PROJECTS\PVTA\UMASS AMHERST - 185 HOLDSWORTHS WAY\FIELD\MONITORING WELL INSTALL 3.27.25\GINT\PVTA_UMASS_.GPJ

APPENDIX C

Lab Data Reports

Pace Analytical Services, LLC - East Longmeadow, Ma

39 Spruce Street * East Longmeadow, MA 01028 * FAX 413/525-6405 * TEL. 413/525-2332

April 10, 2025

Kyle McCaffery
Roux Associates
200 Summit Drive, Suite 500
Burlington, MA 01803

Project Location: 185 Holdsworth Way Amherst MA
Client Job Number:
Project Number: 4218.0002M000
Laboratory Work Order Number: 25C1879

Enclosed are results of analyses for samples as received by the laboratory on March 27, 2025. If you have any questions concerning this report, please feel free to contact me.

Sincerely,

Karriem G. Marius
Project Manager

Table of Contents

Sample Summary 3

Case Narrative 4

Sample Results 5

25C1879-01 5

25C1879-02 8

25C1879-03 11

25C1879-04 14

25C1879-05 17

25C1879-06 20

Sample Preparation Information 23

QC Data 24

Polychlorinated Biphenyls By GC/ECD 24

B401933 24

B402488 25

Petroleum Hydrocarbons Analyses - EPH 27

B401934 27

B402506 29

Dual Column RPD Report 32

Flag/Qualifier Summary 38

Certifications 39

Chain of Custody/Sample Receipt 42

Pace Analytical Services, LLC - East Longmeadow, Ma

39 Spruce Street * East Longmeadow, MA 01028 * FAX 413/525-6405 * TEL. 413/525-2332

Roux Associates
200 Summit Drive, Suite 500
Burlington, MA 01803
ATTN: Kyle McCaffery

REPORT DATE: 4/10/2025

PURCHASE ORDER NUMBER:

PROJECT NUMBER: 4218.0002M000

ANALYTICAL SUMMARY

WORK ORDER NUMBER: 25C1879

The results of analyses performed on the following samples submitted to Pace Analytical Services, LLC - East Longmeadow, Ma, are found in this report.

PROJECT LOCATION: 185 Holdsworth Way Amherst MA

FIELD SAMPLE #	LAB ID:	MATRIX	SAMPLE DESCRIPTION	TEST	SUB LAB
SB-001 (8-10)	25C1879-01	Soil		MADEP EPH rev 2.1	
				SM 2540G	
				SW-846 8082A	
SB-002 (11-13)	25C1879-02	Soil		MADEP EPH rev 2.1	
				SM 2540G	
				SW-846 8082A	
SB-003 (8-10)	25C1879-03	Soil		MADEP EPH rev 2.1	
				SM 2540G	
				SW-846 8082A	
SB-001 (13-15)	25C1879-04	Soil		MADEP EPH rev 2.1	
				SM 2540G	
				SW-846 8082A	
SB-002 (13-15)	25C1879-05	Soil		MADEP EPH rev 2.1	
				SM 2540G	
				SW-846 8082A	
SB-003 (12-13)	25C1879-06	Soil		MADEP EPH rev 2.1	
				SM 2540G	
				SW-846 8082A	

Pace Analytical Services, LLC - East Longmeadow, Ma

39 Spruce Street * East Longmeadow, MA 01028 * FAX 413/525-6405 * TEL. 413/525-2332

CASE NARRATIVE SUMMARY

All reported results are within defined laboratory quality control objectives unless listed below or otherwise qualified in this report.

Approval provided to run and report client requested hold samples.

SM 2540G

Qualifications:

H-10

Analysis was requested after the recommended holding time had passed.

Analyte & Samples(s) Qualified:

25C1879-04[SB-001 (13-15)], 25C1879-05[SB-002 (13-15)], 25C1879-06[SB-003 (12-13)]

SW-846 8082A

Qualifications:

O-32

A dilution was performed as part of the standard analytical procedure.

Analyte & Samples(s) Qualified:

25C1879-04[SB-001 (13-15)], 25C1879-05[SB-002 (13-15)], 25C1879-06[SB-003 (12-13)]

The results of analyses reported only relate to samples submitted to Pace Analytical Services, LLC - East Longmeadow, Ma, for testing.
I certify that the analyses listed above, unless specifically listed as subcontracted, if any, were performed under my direction according to the approved methodologies listed in this document, and that based upon my inquiry of those individuals immediately responsible for obtaining the information, the material contained in this report is, to the best of my knowledge and belief, accurate and complete.

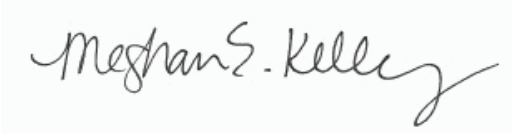

Meghan E. Kelley
Reporting Specialist

Pace Analytical Services, LLC - East Longmeadow, Ma

39 Spruce Street * East Longmeadow, MA 01028 * FAX 413/525-6405 * TEL. 413/525-2332

Project Location: 185 Holdsworth Way Amherst MA Sample Description: Work Order: 25C1879

Date Received: 3/27/2025

Field Sample #: SB-001 (8-10) Sampled: 3/27/2025 11:00

Sample ID: 25C1879-01

Sample Matrix: Soil

Polychlorinated Biphenyls By GC/ECD

Analyte	Results	RL	Units	Dilution	Flag/Qual	Method	Date Prepared	Date/Time Analyzed	Analyst
Aroclor-1016 [1]	ND	0.085	mg/Kg dry	4		SW-846 8082A	3/31/25	4/2/25 1:57	MEW
Aroclor-1221 [1]	ND	0.085	mg/Kg dry	4		SW-846 8082A	3/31/25	4/2/25 1:57	MEW
Aroclor-1232 [1]	ND	0.085	mg/Kg dry	4		SW-846 8082A	3/31/25	4/2/25 1:57	MEW
Aroclor-1242 [1]	ND	0.085	mg/Kg dry	4		SW-846 8082A	3/31/25	4/2/25 1:57	MEW
Aroclor-1248 [1]	ND	0.085	mg/Kg dry	4		SW-846 8082A	3/31/25	4/2/25 1:57	MEW
Aroclor-1254 [1]	ND	0.085	mg/Kg dry	4		SW-846 8082A	3/31/25	4/2/25 1:57	MEW
Aroclor-1260 [1]	ND	0.085	mg/Kg dry	4		SW-846 8082A	3/31/25	4/2/25 1:57	MEW
Aroclor-1262 [1]	ND	0.085	mg/Kg dry	4		SW-846 8082A	3/31/25	4/2/25 1:57	MEW
Aroclor-1268 [1]	ND	0.085	mg/Kg dry	4		SW-846 8082A	3/31/25	4/2/25 1:57	MEW

Surrogates	% Recovery	Recovery Limits	Flag/Qual	
Decachlorobiphenyl [1]	115	30-150		4/2/25 1:57
Decachlorobiphenyl [2]	116	30-150		4/2/25 1:57
Tetrachloro-m-xylene [1]	105	30-150		4/2/25 1:57
Tetrachloro-m-xylene [2]	112	30-150		4/2/25 1:57

Pace Analytical Services, LLC - East Longmeadow, Ma

39 Spruce Street * East Longmeadow, MA 01028 * FAX 413/525-6405 * TEL. 413/525-2332

Project Location: 185 Holdsworth Way Amherst MA Sample Description: Work Order: 25C1879

Date Received: 3/27/2025

Field Sample #: SB-001 (8-10) Sampled: 3/27/2025 11:00

Sample ID: 25C1879-01

Sample Matrix: Soil

Petroleum Hydrocarbons Analyses - EPH

Analyte	Results	RL	Units	Dilution	Flag/Qual	Method	Date Prepared	Date/Time Analyzed	Analyst
C9-C18 Aliphatics	ND	11	mg/Kg dry	1		MADEP EPH rev 2.1	3/31/25	4/2/25 12:10	RDD
C19-C36 Aliphatics	ND	11	mg/Kg dry	1		MADEP EPH rev 2.1	3/31/25	4/2/25 12:10	RDD
Unadjusted C11-C22 Aromatics	ND	11	mg/Kg dry	1		MADEP EPH rev 2.1	3/31/25	4/2/25 12:10	RDD
C11-C22 Aromatics	ND	11	mg/Kg dry	1		MADEP EPH rev 2.1	3/31/25	4/2/25 12:10	RDD
Acenaphthene	ND	0.11	mg/Kg dry	1		MADEP EPH rev 2.1	3/31/25	4/2/25 12:10	RDD
Acenaphthylene	ND	0.11	mg/Kg dry	1		MADEP EPH rev 2.1	3/31/25	4/2/25 12:10	RDD
Anthracene	ND	0.11	mg/Kg dry	1		MADEP EPH rev 2.1	3/31/25	4/2/25 12:10	RDD
Benzo(a)anthracene	ND	0.11	mg/Kg dry	1		MADEP EPH rev 2.1	3/31/25	4/2/25 12:10	RDD
Benzo(a)pyrene	ND	0.11	mg/Kg dry	1		MADEP EPH rev 2.1	3/31/25	4/2/25 12:10	RDD
Benzo(b)fluoranthene	ND	0.11	mg/Kg dry	1		MADEP EPH rev 2.1	3/31/25	4/2/25 12:10	RDD
Benzo(g,h,i)perylene	ND	0.11	mg/Kg dry	1		MADEP EPH rev 2.1	3/31/25	4/2/25 12:10	RDD
Benzo(k)fluoranthene	ND	0.11	mg/Kg dry	1		MADEP EPH rev 2.1	3/31/25	4/2/25 12:10	RDD
Chrysene	ND	0.11	mg/Kg dry	1		MADEP EPH rev 2.1	3/31/25	4/2/25 12:10	RDD
Dibenz(a,h)anthracene	ND	0.11	mg/Kg dry	1		MADEP EPH rev 2.1	3/31/25	4/2/25 12:10	RDD
Fluoranthene	ND	0.11	mg/Kg dry	1		MADEP EPH rev 2.1	3/31/25	4/2/25 12:10	RDD
Fluorene	ND	0.11	mg/Kg dry	1		MADEP EPH rev 2.1	3/31/25	4/2/25 12:10	RDD
Indeno(1,2,3-cd)pyrene	ND	0.11	mg/Kg dry	1		MADEP EPH rev 2.1	3/31/25	4/2/25 12:10	RDD
2-Methylnaphthalene	ND	0.11	mg/Kg dry	1		MADEP EPH rev 2.1	3/31/25	4/2/25 12:10	RDD
Naphthalene	ND	0.11	mg/Kg dry	1		MADEP EPH rev 2.1	3/31/25	4/2/25 12:10	RDD
Phenanthrene	ND	0.11	mg/Kg dry	1		MADEP EPH rev 2.1	3/31/25	4/2/25 12:10	RDD
Pyrene	ND	0.11	mg/Kg dry	1		MADEP EPH rev 2.1	3/31/25	4/2/25 12:10	RDD

Surrogates	% Recovery	Recovery Limits	Flag/Qual	
Chlorooctadecane (COD)	77.8	40-140		4/2/25 12:10
o-Terphenyl (OTP)	89.0	40-140		4/2/25 12:10
2-Bromonaphthalene	103	40-140		4/2/25 12:10
2-Fluorobiphenyl	103	40-140		4/2/25 12:10

Pace Analytical Services, LLC - East Longmeadow, Ma

39 Spruce Street * East Longmeadow, MA 01028 * FAX 413/525-6405 * TEL. 413/525-2332

Project Location: 185 Holdsworth Way Amherst MA Sample Description: Work Order: 25C1879

Date Received: 3/27/2025

Field Sample #: SB-001 (8-10) Sampled: 3/27/2025 11:00

Sample ID: 25C1879-01

Sample Matrix: Soil

Conventional Chemistry Parameters by EPA/APHA/SW-846 Methods (Total)

Analyte	Results	RL	Units	Dilution	Flag/Qual	Method	Date Prepared	Date/Time Analyzed	Analyst
% Solids	93.6		% Wt	1		SM 2540G	3/30/25	3/30/25 8:49	ANR

Pace Analytical Services, LLC - East Longmeadow, Ma

39 Spruce Street * East Longmeadow, MA 01028 * FAX 413/525-6405 * TEL. 413/525-2332

Project Location: 185 Holdsworth Way Amherst MA Sample Description: Work Order: 25C1879

Date Received: 3/27/2025

Field Sample #: SB-002 (11-13) Sampled: 3/27/2025 13:10

Sample ID: 25C1879-02

Sample Matrix: Soil

Polychlorinated Biphenyls By GC/ECD

Analyte	Results	RL	Units	Dilution	Flag/Qual	Method	Date Prepared	Date/Time Analyzed	Analyst
Aroclor-1016 [1]	ND	0.094	mg/Kg dry	4		SW-846 8082A	3/31/25	4/2/25 2:14	MEW
Aroclor-1221 [1]	ND	0.094	mg/Kg dry	4		SW-846 8082A	3/31/25	4/2/25 2:14	MEW
Aroclor-1232 [1]	ND	0.094	mg/Kg dry	4		SW-846 8082A	3/31/25	4/2/25 2:14	MEW
Aroclor-1242 [1]	ND	0.094	mg/Kg dry	4		SW-846 8082A	3/31/25	4/2/25 2:14	MEW
Aroclor-1248 [1]	ND	0.094	mg/Kg dry	4		SW-846 8082A	3/31/25	4/2/25 2:14	MEW
Aroclor-1254 [1]	ND	0.094	mg/Kg dry	4		SW-846 8082A	3/31/25	4/2/25 2:14	MEW
Aroclor-1260 [1]	ND	0.094	mg/Kg dry	4		SW-846 8082A	3/31/25	4/2/25 2:14	MEW
Aroclor-1262 [1]	ND	0.094	mg/Kg dry	4		SW-846 8082A	3/31/25	4/2/25 2:14	MEW
Aroclor-1268 [1]	ND	0.094	mg/Kg dry	4		SW-846 8082A	3/31/25	4/2/25 2:14	MEW

Surrogates	% Recovery	Recovery Limits	Flag/Qual	
Decachlorobiphenyl [1]	87.4	30-150		4/2/25 2:14
Decachlorobiphenyl [2]	99.8	30-150		4/2/25 2:14
Tetrachloro-m-xylene [1]	86.9	30-150		4/2/25 2:14
Tetrachloro-m-xylene [2]	96.3	30-150		4/2/25 2:14

Pace Analytical Services, LLC - East Longmeadow, Ma

39 Spruce Street * East Longmeadow, MA 01028 * FAX 413/525-6405 * TEL. 413/525-2332

Project Location: 185 Holdsworth Way Amherst MA Sample Description: Work Order: 25C1879

Date Received: 3/27/2025

Field Sample #: SB-002 (11-13) Sampled: 3/27/2025 13:10

Sample ID: 25C1879-02

Sample Matrix: Soil

Petroleum Hydrocarbons Analyses - EPH

Analyte	Results	RL	Units	Dilution	Flag/Qual	Method	Date Prepared	Date/Time Analyzed	Analyst
C9-C18 Aliphatics	ND	12	mg/Kg dry	1		MADEP EPH rev 2.1	3/31/25	4/2/25 13:24	RDD
C19-C36 Aliphatics	ND	12	mg/Kg dry	1		MADEP EPH rev 2.1	3/31/25	4/2/25 13:24	RDD
Unadjusted C11-C22 Aromatics	ND	12	mg/Kg dry	1		MADEP EPH rev 2.1	3/31/25	4/2/25 13:24	RDD
C11-C22 Aromatics	ND	12	mg/Kg dry	1		MADEP EPH rev 2.1	3/31/25	4/2/25 13:24	RDD
Acenaphthene	ND	0.12	mg/Kg dry	1		MADEP EPH rev 2.1	3/31/25	4/2/25 13:24	RDD
Acenaphthylene	ND	0.12	mg/Kg dry	1		MADEP EPH rev 2.1	3/31/25	4/2/25 13:24	RDD
Anthracene	ND	0.12	mg/Kg dry	1		MADEP EPH rev 2.1	3/31/25	4/2/25 13:24	RDD
Benzo(a)anthracene	ND	0.12	mg/Kg dry	1		MADEP EPH rev 2.1	3/31/25	4/2/25 13:24	RDD
Benzo(a)pyrene	ND	0.12	mg/Kg dry	1		MADEP EPH rev 2.1	3/31/25	4/2/25 13:24	RDD
Benzo(b)fluoranthene	ND	0.12	mg/Kg dry	1		MADEP EPH rev 2.1	3/31/25	4/2/25 13:24	RDD
Benzo(g,h,i)perylene	ND	0.12	mg/Kg dry	1		MADEP EPH rev 2.1	3/31/25	4/2/25 13:24	RDD
Benzo(k)fluoranthene	ND	0.12	mg/Kg dry	1		MADEP EPH rev 2.1	3/31/25	4/2/25 13:24	RDD
Chrysene	ND	0.12	mg/Kg dry	1		MADEP EPH rev 2.1	3/31/25	4/2/25 13:24	RDD
Dibenz(a,h)anthracene	ND	0.12	mg/Kg dry	1		MADEP EPH rev 2.1	3/31/25	4/2/25 13:24	RDD
Fluoranthene	ND	0.12	mg/Kg dry	1		MADEP EPH rev 2.1	3/31/25	4/2/25 13:24	RDD
Fluorene	ND	0.12	mg/Kg dry	1		MADEP EPH rev 2.1	3/31/25	4/2/25 13:24	RDD
Indeno(1,2,3-cd)pyrene	ND	0.12	mg/Kg dry	1		MADEP EPH rev 2.1	3/31/25	4/2/25 13:24	RDD
2-Methylnaphthalene	ND	0.12	mg/Kg dry	1		MADEP EPH rev 2.1	3/31/25	4/2/25 13:24	RDD
Naphthalene	ND	0.12	mg/Kg dry	1		MADEP EPH rev 2.1	3/31/25	4/2/25 13:24	RDD
Phenanthrene	ND	0.12	mg/Kg dry	1		MADEP EPH rev 2.1	3/31/25	4/2/25 13:24	RDD
Pyrene	ND	0.12	mg/Kg dry	1		MADEP EPH rev 2.1	3/31/25	4/2/25 13:24	RDD

Surrogates	% Recovery	Recovery Limits	Flag/Qual	
Chlorooctadecane (COD)	71.6	40-140		4/2/25 13:24
o-Terphenyl (OTP)	87.1	40-140		4/2/25 13:24
2-Bromonaphthalene	107	40-140		4/2/25 13:24
2-Fluorobiphenyl	108	40-140		4/2/25 13:24

Pace Analytical Services, LLC - East Longmeadow, Ma

39 Spruce Street * East Longmeadow, MA 01028 * FAX 413/525-6405 * TEL. 413/525-2332

Project Location: 185 Holdsworth Way Amherst MA Sample Description: Work Order: 25C1879

Date Received: 3/27/2025

Field Sample #: SB-002 (11-13) Sampled: 3/27/2025 13:10

Sample ID: 25C1879-02

Sample Matrix: Soil

Conventional Chemistry Parameters by EPA/APHA/SW-846 Methods (Total)

Analyte	Results	RL	Units	Dilution	Flag/Qual	Method	Date Prepared	Date/Time Analyzed	Analyst
% Solids	85.0		% Wt	1		SM 2540G	3/30/25	3/30/25 8:49	ANR

Pace Analytical Services, LLC - East Longmeadow, Ma

39 Spruce Street * East Longmeadow, MA 01028 * FAX 413/525-6405 * TEL. 413/525-2332

Project Location: 185 Holdsworth Way Amherst MA Sample Description: Work Order: 25C1879

Date Received: 3/27/2025

Field Sample #: SB-003 (8-10) Sampled: 3/27/2025 12:00

Sample ID: 25C1879-03

Sample Matrix: Soil

Polychlorinated Biphenyls By GC/ECD

Analyte	Results	RL	Units	Dilution	Flag/Qual	Method	Date Prepared	Date/Time Analyzed	Analyst
Aroclor-1016 [1]	ND	0.089	mg/Kg dry	4		SW-846 8082A	3/31/25	4/2/25 2:31	MEW
Aroclor-1221 [1]	ND	0.089	mg/Kg dry	4		SW-846 8082A	3/31/25	4/2/25 2:31	MEW
Aroclor-1232 [1]	ND	0.089	mg/Kg dry	4		SW-846 8082A	3/31/25	4/2/25 2:31	MEW
Aroclor-1242 [1]	ND	0.089	mg/Kg dry	4		SW-846 8082A	3/31/25	4/2/25 2:31	MEW
Aroclor-1248 [1]	ND	0.089	mg/Kg dry	4		SW-846 8082A	3/31/25	4/2/25 2:31	MEW
Aroclor-1254 [1]	ND	0.089	mg/Kg dry	4		SW-846 8082A	3/31/25	4/2/25 2:31	MEW
Aroclor-1260 [1]	ND	0.089	mg/Kg dry	4		SW-846 8082A	3/31/25	4/2/25 2:31	MEW
Aroclor-1262 [1]	ND	0.089	mg/Kg dry	4		SW-846 8082A	3/31/25	4/2/25 2:31	MEW
Aroclor-1268 [1]	ND	0.089	mg/Kg dry	4		SW-846 8082A	3/31/25	4/2/25 2:31	MEW

Surrogates	% Recovery	Recovery Limits	Flag/Qual	
Decachlorobiphenyl [1]	116	30-150		4/2/25 2:31
Decachlorobiphenyl [2]	112	30-150		4/2/25 2:31
Tetrachloro-m-xylene [1]	105	30-150		4/2/25 2:31
Tetrachloro-m-xylene [2]	107	30-150		4/2/25 2:31

Pace Analytical Services, LLC - East Longmeadow, Ma

39 Spruce Street * East Longmeadow, MA 01028 * FAX 413/525-6405 * TEL. 413/525-2332

Project Location: 185 Holdsworth Way Amherst MA Sample Description: Work Order: 25C1879

Date Received: 3/27/2025

Field Sample #: SB-003 (8-10) Sampled: 3/27/2025 12:00

Sample ID: 25C1879-03

Sample Matrix: Soil

Petroleum Hydrocarbons Analyses - EPH

Analyte	Results	RL	Units	Dilution	Flag/Qual	Method	Date Prepared	Date/Time Analyzed	Analyst
C9-C18 Aliphatics	ND	11	mg/Kg dry	1		MADEP EPH rev 2.1	3/31/25	4/2/25 13:06	RDD
C19-C36 Aliphatics	ND	11	mg/Kg dry	1		MADEP EPH rev 2.1	3/31/25	4/2/25 13:06	RDD
Unadjusted C11-C22 Aromatics	ND	11	mg/Kg dry	1		MADEP EPH rev 2.1	3/31/25	4/2/25 13:06	RDD
C11-C22 Aromatics	ND	11	mg/Kg dry	1		MADEP EPH rev 2.1	3/31/25	4/2/25 13:06	RDD
Acenaphthene	ND	0.11	mg/Kg dry	1		MADEP EPH rev 2.1	3/31/25	4/2/25 13:06	RDD
Acenaphthylene	ND	0.11	mg/Kg dry	1		MADEP EPH rev 2.1	3/31/25	4/2/25 13:06	RDD
Anthracene	ND	0.11	mg/Kg dry	1		MADEP EPH rev 2.1	3/31/25	4/2/25 13:06	RDD
Benzo(a)anthracene	ND	0.11	mg/Kg dry	1		MADEP EPH rev 2.1	3/31/25	4/2/25 13:06	RDD
Benzo(a)pyrene	ND	0.11	mg/Kg dry	1		MADEP EPH rev 2.1	3/31/25	4/2/25 13:06	RDD
Benzo(b)fluoranthene	ND	0.11	mg/Kg dry	1		MADEP EPH rev 2.1	3/31/25	4/2/25 13:06	RDD
Benzo(g,h,i)perylene	ND	0.11	mg/Kg dry	1		MADEP EPH rev 2.1	3/31/25	4/2/25 13:06	RDD
Benzo(k)fluoranthene	ND	0.11	mg/Kg dry	1		MADEP EPH rev 2.1	3/31/25	4/2/25 13:06	RDD
Chrysene	ND	0.11	mg/Kg dry	1		MADEP EPH rev 2.1	3/31/25	4/2/25 13:06	RDD
Dibenz(a,h)anthracene	ND	0.11	mg/Kg dry	1		MADEP EPH rev 2.1	3/31/25	4/2/25 13:06	RDD
Fluoranthene	ND	0.11	mg/Kg dry	1		MADEP EPH rev 2.1	3/31/25	4/2/25 13:06	RDD
Fluorene	ND	0.11	mg/Kg dry	1		MADEP EPH rev 2.1	3/31/25	4/2/25 13:06	RDD
Indeno(1,2,3-cd)pyrene	ND	0.11	mg/Kg dry	1		MADEP EPH rev 2.1	3/31/25	4/2/25 13:06	RDD
2-Methylnaphthalene	ND	0.11	mg/Kg dry	1		MADEP EPH rev 2.1	3/31/25	4/2/25 13:06	RDD
Naphthalene	ND	0.11	mg/Kg dry	1		MADEP EPH rev 2.1	3/31/25	4/2/25 13:06	RDD
Phenanthrene	ND	0.11	mg/Kg dry	1		MADEP EPH rev 2.1	3/31/25	4/2/25 13:06	RDD
Pyrene	ND	0.11	mg/Kg dry	1		MADEP EPH rev 2.1	3/31/25	4/2/25 13:06	RDD

Surrogates	% Recovery	Recovery Limits	Flag/Qual	
Chlorooctadecane (COD)	71.5	40-140		4/2/25 13:06
o-Terphenyl (OTP)	84.1	40-140		4/2/25 13:06
2-Bromonaphthalene	97.1	40-140		4/2/25 13:06
2-Fluorobiphenyl	98.9	40-140		4/2/25 13:06

39 Spruce Street * East Longmeadow, MA 01028 * FAX 413/525-6405 * TEL. 413/525-2332

Project Location: 185 Holdsworth Way Amherst MA Sample Description: Work Order: 25C1879

Date Received: 3/27/2025

Field Sample #: SB-003 (8-10) Sampled: 3/27/2025 12:00

Sample ID: 25C1879-03

Sample Matrix: Soil

Conventional Chemistry Parameters by EPA/APHA/SW-846 Methods (Total)

Analyte	Results	RL	Units	Dilution	Flag/Qual	Method	Date Prepared	Date/Time Analyzed	Analyst
% Solids	89.8		% Wt	1		SM 2540G	3/30/25	3/30/25 8:49	ANR

Pace Analytical Services, LLC - East Longmeadow, Ma

39 Spruce Street * East Longmeadow, MA 01028 * FAX 413/525-6405 * TEL. 413/525-2332

Project Location: 185 Holdsworth Way Amherst MA Sample Description: Work Order: 25C1879

Date Received: 3/27/2025

Field Sample #: SB-001 (13-15) Sampled: 3/27/2025 11:30

Sample ID: 25C1879-04

Sample Matrix: Soil

Sample Flags: O-32

Polychlorinated Biphenyls By GC/ECD

Analyte	Results	RL	Units	Dilution	Flag/Qual	Method	Date Prepared	Date/Time Analyzed	Analyst
Aroclor-1016 [1]	ND	0.085	mg/Kg dry	4		SW-846 8082A	4/8/25	4/10/25 1:39	TG
Aroclor-1221 [1]	ND	0.085	mg/Kg dry	4		SW-846 8082A	4/8/25	4/10/25 1:39	TG
Aroclor-1232 [1]	ND	0.085	mg/Kg dry	4		SW-846 8082A	4/8/25	4/10/25 1:39	TG
Aroclor-1242 [1]	ND	0.085	mg/Kg dry	4		SW-846 8082A	4/8/25	4/10/25 1:39	TG
Aroclor-1248 [1]	ND	0.085	mg/Kg dry	4		SW-846 8082A	4/8/25	4/10/25 1:39	TG
Aroclor-1254 [1]	ND	0.085	mg/Kg dry	4		SW-846 8082A	4/8/25	4/10/25 1:39	TG
Aroclor-1260 [1]	ND	0.085	mg/Kg dry	4		SW-846 8082A	4/8/25	4/10/25 1:39	TG
Aroclor-1262 [1]	ND	0.085	mg/Kg dry	4		SW-846 8082A	4/8/25	4/10/25 1:39	TG
Aroclor-1268 [1]	ND	0.085	mg/Kg dry	4		SW-846 8082A	4/8/25	4/10/25 1:39	TG

Surrogates	% Recovery	Recovery Limits	Flag/Qual	
Decachlorobiphenyl [1]	73.3	30-150		4/10/25 1:39
Decachlorobiphenyl [2]	89.3	30-150		4/10/25 1:39
Tetrachloro-m-xylene [1]	81.7	30-150		4/10/25 1:39
Tetrachloro-m-xylene [2]	87.3	30-150		4/10/25 1:39

Pace Analytical Services, LLC - East Longmeadow, Ma

39 Spruce Street * East Longmeadow, MA 01028 * FAX 413/525-6405 * TEL. 413/525-2332

Project Location: 185 Holdsworth Way Amherst MA Sample Description: Work Order: 25C1879

Date Received: 3/27/2025

Field Sample #: SB-001 (13-15) Sampled: 3/27/2025 11:30

Sample ID: 25C1879-04

Sample Matrix: Soil

Petroleum Hydrocarbons Analyses - EPH

Analyte	Results	RL	Units	Dilution	Flag/Qual	Method	Date Prepared	Date/Time Analyzed	Analyst
C9-C18 Aliphatics	ND	11	mg/Kg dry	1		MADEP EPH rev 2.1	4/8/25	4/9/25 13:37	RDD
C19-C36 Aliphatics	ND	11	mg/Kg dry	1		MADEP EPH rev 2.1	4/8/25	4/9/25 13:37	RDD
Unadjusted C11-C22 Aromatics	ND	11	mg/Kg dry	1		MADEP EPH rev 2.1	4/8/25	4/9/25 13:37	RDD
C11-C22 Aromatics	ND	11	mg/Kg dry	1		MADEP EPH rev 2.1	4/8/25	4/9/25 13:37	RDD
Acenaphthene	ND	0.11	mg/Kg dry	1		MADEP EPH rev 2.1	4/8/25	4/9/25 13:37	RDD
Acenaphthylene	ND	0.11	mg/Kg dry	1		MADEP EPH rev 2.1	4/8/25	4/9/25 13:37	RDD
Anthracene	ND	0.11	mg/Kg dry	1		MADEP EPH rev 2.1	4/8/25	4/9/25 13:37	RDD
Benzo(a)anthracene	ND	0.11	mg/Kg dry	1		MADEP EPH rev 2.1	4/8/25	4/9/25 13:37	RDD
Benzo(a)pyrene	ND	0.11	mg/Kg dry	1		MADEP EPH rev 2.1	4/8/25	4/9/25 13:37	RDD
Benzo(b)fluoranthene	ND	0.11	mg/Kg dry	1		MADEP EPH rev 2.1	4/8/25	4/9/25 13:37	RDD
Benzo(g,h,i)perylene	ND	0.11	mg/Kg dry	1		MADEP EPH rev 2.1	4/8/25	4/9/25 13:37	RDD
Benzo(k)fluoranthene	ND	0.11	mg/Kg dry	1		MADEP EPH rev 2.1	4/8/25	4/9/25 13:37	RDD
Chrysene	ND	0.11	mg/Kg dry	1		MADEP EPH rev 2.1	4/8/25	4/9/25 13:37	RDD
Dibenz(a,h)anthracene	ND	0.11	mg/Kg dry	1		MADEP EPH rev 2.1	4/8/25	4/9/25 13:37	RDD
Fluoranthene	ND	0.11	mg/Kg dry	1		MADEP EPH rev 2.1	4/8/25	4/9/25 13:37	RDD
Fluorene	ND	0.11	mg/Kg dry	1		MADEP EPH rev 2.1	4/8/25	4/9/25 13:37	RDD
Indeno(1,2,3-cd)pyrene	ND	0.11	mg/Kg dry	1		MADEP EPH rev 2.1	4/8/25	4/9/25 13:37	RDD
2-Methylnaphthalene	ND	0.11	mg/Kg dry	1		MADEP EPH rev 2.1	4/8/25	4/9/25 13:37	RDD
Naphthalene	ND	0.11	mg/Kg dry	1		MADEP EPH rev 2.1	4/8/25	4/9/25 13:37	RDD
Phenanthrene	ND	0.11	mg/Kg dry	1		MADEP EPH rev 2.1	4/8/25	4/9/25 13:37	RDD
Pyrene	ND	0.11	mg/Kg dry	1		MADEP EPH rev 2.1	4/8/25	4/9/25 13:37	RDD

Surrogates	% Recovery	Recovery Limits	Flag/Qual	
Chlorooctadecane (COD)	79.2	40-140		4/9/25 13:37
o-Terphenyl (OTP)	81.8	40-140		4/9/25 13:37
2-Bromonaphthalene	98.9	40-140		4/9/25 13:37
2-Fluorobiphenyl	102	40-140		4/9/25 13:37

39 Spruce Street * East Longmeadow, MA 01028 * FAX 413/525-6405 * TEL. 413/525-2332

Project Location: 185 Holdsworth Way Amherst MA Sample Description: Work Order: 25C1879

Date Received: 3/27/2025

Field Sample #: SB-001 (13-15) Sampled: 3/27/2025 11:30

Sample ID: 25C1879-04

Sample Matrix: Soil

Sample Flags: H-10

Conventional Chemistry Parameters by EPA/APHA/SW-846 Methods (Total)

Analyte	Results	RL	Units	Dilution	Flag/Qual	Method	Date Prepared	Date/Time Analyzed	Analyst
% Solids	92.0		% Wt	1		SM 2540G	4/9/25	4/9/25 7:55	MLR

39 Spruce Street * East Longmeadow, MA 01028 * FAX 413/525-6405 * TEL. 413/525-2332

Project Location: 185 Holdsworth Way Amherst MA Sample Description: Work Order: 25C1879

Date Received: 3/27/2025

Field Sample #: SB-002 (13-15) Sampled: 3/27/2025 13:30

Sample ID: 25C1879-05

Sample Matrix: Soil

Sample Flags: O-32

Polychlorinated Biphenyls By GC/ECD

Analyte	Results	RL	Units	Dilution	Flag/Qual	Method	Date Prepared	Date/Time Analyzed	Analyst
Aroclor-1016 [1]	ND	0.091	mg/Kg dry	4		SW-846 8082A	4/8/25	4/10/25 1:56	TG
Aroclor-1221 [1]	ND	0.091	mg/Kg dry	4		SW-846 8082A	4/8/25	4/10/25 1:56	TG
Aroclor-1232 [1]	ND	0.091	mg/Kg dry	4		SW-846 8082A	4/8/25	4/10/25 1:56	TG
Aroclor-1242 [1]	ND	0.091	mg/Kg dry	4		SW-846 8082A	4/8/25	4/10/25 1:56	TG
Aroclor-1248 [1]	ND	0.091	mg/Kg dry	4		SW-846 8082A	4/8/25	4/10/25 1:56	TG
Aroclor-1254 [1]	ND	0.091	mg/Kg dry	4		SW-846 8082A	4/8/25	4/10/25 1:56	TG
Aroclor-1260 [1]	ND	0.091	mg/Kg dry	4		SW-846 8082A	4/8/25	4/10/25 1:56	TG
Aroclor-1262 [1]	ND	0.091	mg/Kg dry	4		SW-846 8082A	4/8/25	4/10/25 1:56	TG
Aroclor-1268 [1]	ND	0.091	mg/Kg dry	4		SW-846 8082A	4/8/25	4/10/25 1:56	TG

Surrogates	% Recovery	Recovery Limits	Flag/Qual	
Decachlorobiphenyl [1]	46.7	30-150		4/10/25 1:56
Decachlorobiphenyl [2]	61.1	30-150		4/10/25 1:56
Tetrachloro-m-xylene [1]	76.5	30-150		4/10/25 1:56
Tetrachloro-m-xylene [2]	80.8	30-150		4/10/25 1:56

Pace Analytical Services, LLC - East Longmeadow, Ma

39 Spruce Street * East Longmeadow, MA 01028 * FAX 413/525-6405 * TEL. 413/525-2332

Project Location: 185 Holdsworth Way Amherst MA Sample Description: Work Order: 25C1879

Date Received: 3/27/2025

Field Sample #: SB-002 (13-15) Sampled: 3/27/2025 13:30

Sample ID: 25C1879-05

Sample Matrix: Soil

Petroleum Hydrocarbons Analyses - EPH

Analyte	Results	RL	Units	Dilution	Flag/Qual	Method	Date Prepared	Date/Time Analyzed	Analyst
C9-C18 Aliphatics	ND	110	mg/Kg dry	10		MADEP EPH rev 2.1	4/8/25	4/9/25 14:32	RDD
C19-C36 Aliphatics	590	110	mg/Kg dry	10		MADEP EPH rev 2.1	4/8/25	4/9/25 14:32	RDD
Unadjusted C11-C22 Aromatics	650	110	mg/Kg dry	10		MADEP EPH rev 2.1	4/8/25	4/9/25 14:32	RDD
C11-C22 Aromatics	650	110	mg/Kg dry	10		MADEP EPH rev 2.1	4/8/25	4/9/25 14:32	RDD
Acenaphthene	ND	1.1	mg/Kg dry	10		MADEP EPH rev 2.1	4/8/25	4/9/25 14:32	RDD
Acenaphthylene	ND	1.1	mg/Kg dry	10		MADEP EPH rev 2.1	4/8/25	4/9/25 14:32	RDD
Anthracene	ND	1.1	mg/Kg dry	10		MADEP EPH rev 2.1	4/8/25	4/9/25 14:32	RDD
Benzo(a)anthracene	ND	1.1	mg/Kg dry	10		MADEP EPH rev 2.1	4/8/25	4/9/25 14:32	RDD
Benzo(a)pyrene	ND	1.1	mg/Kg dry	10		MADEP EPH rev 2.1	4/8/25	4/9/25 14:32	RDD
Benzo(b)fluoranthene	ND	1.1	mg/Kg dry	10		MADEP EPH rev 2.1	4/8/25	4/9/25 14:32	RDD
Benzo(g,h,i)perylene	ND	1.1	mg/Kg dry	10		MADEP EPH rev 2.1	4/8/25	4/9/25 14:32	RDD
Benzo(k)fluoranthene	ND	1.1	mg/Kg dry	10		MADEP EPH rev 2.1	4/8/25	4/9/25 14:32	RDD
Chrysene	ND	1.1	mg/Kg dry	10		MADEP EPH rev 2.1	4/8/25	4/9/25 14:32	RDD
Dibenz(a,h)anthracene	ND	1.1	mg/Kg dry	10		MADEP EPH rev 2.1	4/8/25	4/9/25 14:32	RDD
Fluoranthene	ND	1.1	mg/Kg dry	10		MADEP EPH rev 2.1	4/8/25	4/9/25 14:32	RDD
Fluorene	ND	1.1	mg/Kg dry	10		MADEP EPH rev 2.1	4/8/25	4/9/25 14:32	RDD
Indeno(1,2,3-cd)pyrene	ND	1.1	mg/Kg dry	10		MADEP EPH rev 2.1	4/8/25	4/9/25 14:32	RDD
2-Methylnaphthalene	ND	1.1	mg/Kg dry	10		MADEP EPH rev 2.1	4/8/25	4/9/25 14:32	RDD
Naphthalene	ND	1.1	mg/Kg dry	10		MADEP EPH rev 2.1	4/8/25	4/9/25 14:32	RDD
Phenanthrene	ND	1.1	mg/Kg dry	10		MADEP EPH rev 2.1	4/8/25	4/9/25 14:32	RDD
Pyrene	ND	1.1	mg/Kg dry	10		MADEP EPH rev 2.1	4/8/25	4/9/25 14:32	RDD

Surrogates	% Recovery	Recovery Limits	Flag/Qual	
Chlorooctadecane (COD)	68.5	40-140		4/9/25 14:32
o-Terphenyl (OTP)	98.7	40-140		4/9/25 14:32
2-Bromonaphthalene	102	40-140		4/9/25 14:32
2-Fluorobiphenyl	105	40-140		4/9/25 14:32

39 Spruce Street * East Longmeadow, MA 01028 * FAX 413/525-6405 * TEL. 413/525-2332

Project Location: 185 Holdsworth Way Amherst MA Sample Description: Work Order: 25C1879

Date Received: 3/27/2025

Field Sample #: SB-002 (13-15) Sampled: 3/27/2025 13:30

Sample ID: 25C1879-05

Sample Matrix: Soil

Sample Flags: H-10

Conventional Chemistry Parameters by EPA/APHA/SW-846 Methods (Total)

Analyte	Results	RL	Units	Dilution	Flag/Qual	Method	Date Prepared	Date/Time Analyzed	Analyst
% Solids	86.5		% Wt	1		SM 2540G	4/9/25	4/9/25 7:55	MLR

Pace Analytical Services, LLC - East Longmeadow, Ma

39 Spruce Street * East Longmeadow, MA 01028 * FAX 413/525-6405 * TEL. 413/525-2332

Project Location: 185 Holdsworth Way Amherst MA Sample Description: Work Order: 25C1879

Date Received: 3/27/2025

Field Sample #: SB-003 (12-13) Sampled: 3/27/2025 12:30

Sample ID: 25C1879-06

Sample Matrix: Soil

Sample Flags: O-32

Polychlorinated Biphenyls By GC/ECD

Analyte	Results	RL	Units	Dilution	Flag/Qual	Method	Date Prepared	Date/Time Analyzed	Analyst
Aroclor-1016 [1]	ND	0.089	mg/Kg dry	4		SW-846 8082A	4/8/25	4/10/25 2:14	TG
Aroclor-1221 [1]	ND	0.089	mg/Kg dry	4		SW-846 8082A	4/8/25	4/10/25 2:14	TG
Aroclor-1232 [1]	ND	0.089	mg/Kg dry	4		SW-846 8082A	4/8/25	4/10/25 2:14	TG
Aroclor-1242 [1]	ND	0.089	mg/Kg dry	4		SW-846 8082A	4/8/25	4/10/25 2:14	TG
Aroclor-1248 [1]	ND	0.089	mg/Kg dry	4		SW-846 8082A	4/8/25	4/10/25 2:14	TG
Aroclor-1254 [1]	ND	0.089	mg/Kg dry	4		SW-846 8082A	4/8/25	4/10/25 2:14	TG
Aroclor-1260 [1]	ND	0.089	mg/Kg dry	4		SW-846 8082A	4/8/25	4/10/25 2:14	TG
Aroclor-1262 [1]	ND	0.089	mg/Kg dry	4		SW-846 8082A	4/8/25	4/10/25 2:14	TG
Aroclor-1268 [1]	ND	0.089	mg/Kg dry	4		SW-846 8082A	4/8/25	4/10/25 2:14	TG

Surrogates	% Recovery	Recovery Limits	Flag/Qual	
Decachlorobiphenyl [1]	64.9	30-150		4/10/25 2:14
Decachlorobiphenyl [2]	82.8	30-150		4/10/25 2:14
Tetrachloro-m-xylene [1]	84.1	30-150		4/10/25 2:14
Tetrachloro-m-xylene [2]	89.8	30-150		4/10/25 2:14

39 Spruce Street * East Longmeadow, MA 01028 * FAX 413/525-6405 * TEL. 413/525-2332

Project Location: 185 Holdsworth Way Amherst MA Sample Description: Work Order: 25C1879

Date Received: 3/27/2025

Field Sample #: SB-003 (12-13) Sampled: 3/27/2025 12:30

Sample ID: 25C1879-06

Sample Matrix: Soil

Petroleum Hydrocarbons Analyses - EPH

Analyte	Results	RL	Units	Dilution	Flag/Qual	Method	Date Prepared	Date/Time Analyzed	Analyst
C9-C18 Aliphatics	ND	11	mg/Kg dry	1		MADEP EPH rev 2.1	4/8/25	4/9/25 13:55	RDD
C19-C36 Aliphatics	17	11	mg/Kg dry	1		MADEP EPH rev 2.1	4/8/25	4/9/25 13:55	RDD
Unadjusted C11-C22 Aromatics	20	11	mg/Kg dry	1		MADEP EPH rev 2.1	4/8/25	4/9/25 13:55	RDD
C11-C22 Aromatics	20	11	mg/Kg dry	1		MADEP EPH rev 2.1	4/8/25	4/9/25 13:55	RDD
Acenaphthene	ND	0.11	mg/Kg dry	1		MADEP EPH rev 2.1	4/8/25	4/9/25 13:55	RDD
Acenaphthylene	ND	0.11	mg/Kg dry	1		MADEP EPH rev 2.1	4/8/25	4/9/25 13:55	RDD
Anthracene	ND	0.11	mg/Kg dry	1		MADEP EPH rev 2.1	4/8/25	4/9/25 13:55	RDD
Benzo(a)anthracene	ND	0.11	mg/Kg dry	1		MADEP EPH rev 2.1	4/8/25	4/9/25 13:55	RDD
Benzo(a)pyrene	ND	0.11	mg/Kg dry	1		MADEP EPH rev 2.1	4/8/25	4/9/25 13:55	RDD
Benzo(b)fluoranthene	ND	0.11	mg/Kg dry	1		MADEP EPH rev 2.1	4/8/25	4/9/25 13:55	RDD
Benzo(g,h,i)perylene	ND	0.11	mg/Kg dry	1		MADEP EPH rev 2.1	4/8/25	4/9/25 13:55	RDD
Benzo(k)fluoranthene	ND	0.11	mg/Kg dry	1		MADEP EPH rev 2.1	4/8/25	4/9/25 13:55	RDD
Chrysene	ND	0.11	mg/Kg dry	1		MADEP EPH rev 2.1	4/8/25	4/9/25 13:55	RDD
Dibenz(a,h)anthracene	ND	0.11	mg/Kg dry	1		MADEP EPH rev 2.1	4/8/25	4/9/25 13:55	RDD
Fluoranthene	ND	0.11	mg/Kg dry	1		MADEP EPH rev 2.1	4/8/25	4/9/25 13:55	RDD
Fluorene	ND	0.11	mg/Kg dry	1		MADEP EPH rev 2.1	4/8/25	4/9/25 13:55	RDD
Indeno(1,2,3-cd)pyrene	ND	0.11	mg/Kg dry	1		MADEP EPH rev 2.1	4/8/25	4/9/25 13:55	RDD
2-Methylnaphthalene	ND	0.11	mg/Kg dry	1		MADEP EPH rev 2.1	4/8/25	4/9/25 13:55	RDD
Naphthalene	ND	0.11	mg/Kg dry	1		MADEP EPH rev 2.1	4/8/25	4/9/25 13:55	RDD
Phenanthrene	ND	0.11	mg/Kg dry	1		MADEP EPH rev 2.1	4/8/25	4/9/25 13:55	RDD
Pyrene	ND	0.11	mg/Kg dry	1		MADEP EPH rev 2.1	4/8/25	4/9/25 13:55	RDD

Surrogates	% Recovery	Recovery Limits	Flag/Qual	
Chlorooctadecane (COD)	77.3	40-140		4/9/25 13:55
o-Terphenyl (OTP)	84.1	40-140		4/9/25 13:55
2-Bromonaphthalene	114	40-140		4/9/25 13:55
2-Fluorobiphenyl	118	40-140		4/9/25 13:55

39 Spruce Street * East Longmeadow, MA 01028 * FAX 413/525-6405 * TEL. 413/525-2332

Project Location: 185 Holdsworth Way Amherst MA Sample Description: Work Order: 25C1879

Date Received: 3/27/2025

Field Sample #: SB-003 (12-13) Sampled: 3/27/2025 12:30

Sample ID: 25C1879-06

Sample Matrix: Soil

Sample Flags: H-10

Conventional Chemistry Parameters by EPA/APHA/SW-846 Methods (Total)

Analyte	Results	RL	Units	Dilution	Flag/Qual	Method	Date Prepared	Date/Time Analyzed	Analyst
% Solids	88.1		% Wt	1		SM 2540G	4/9/25	4/9/25 7:55	MLR

Pace Analytical Services, LLC - East Longmeadow, Ma

39 Spruce Street * East Longmeadow, MA 01028 * FAX 413/525-6405 * TEL. 413/525-2332

Sample Extraction Data

Prep Method:SW-846 3546 **Analytical Method:MADEP EPH rev 2.1**

Lab Number [Field ID]	Batch	Initial [g]	Final [mL]	Date
25C1879-01 [SB-001 (8-10)]	B401934	20.0	2.00	03/31/25
25C1879-02 [SB-002 (11-13)]	B401934	20.0	2.00	03/31/25
25C1879-03 [SB-003 (8-10)]	B401934	20.1	2.00	03/31/25

Prep Method:SW-846 3546 **Analytical Method:MADEP EPH rev 2.1**

Lab Number [Field ID]	Batch	Initial [g]	Final [mL]	Date
25C1879-04 [SB-001 (13-15)]	B402506	20.2	2.00	04/08/25
25C1879-05 [SB-002 (13-15)]	B402506	20.4	2.00	04/08/25
25C1879-06 [SB-003 (12-13)]	B402506	20.7	2.00	04/08/25

Prep Method:% Solids **Analytical Method:SM 2540G**

Lab Number [Field ID]	Batch	Date
25C1879-01 [SB-001 (8-10)]	B401913	03/30/25
25C1879-02 [SB-002 (11-13)]	B401913	03/30/25
25C1879-03 [SB-003 (8-10)]	B401913	03/30/25

Prep Method:% Solids **Analytical Method:SM 2540G**

Lab Number [Field ID]	Batch	Date
25C1879-04 [SB-001 (13-15)]	B402590	04/09/25
25C1879-05 [SB-002 (13-15)]	B402590	04/09/25
25C1879-06 [SB-003 (12-13)]	B402590	04/09/25

Prep Method:SW-846 3546 **Analytical Method:SW-846 8082A**

Lab Number [Field ID]	Batch	Initial [g]	Final [mL]	Date
25C1879-01 [SB-001 (8-10)]	B401933	10.0	10.0	03/31/25
25C1879-02 [SB-002 (11-13)]	B401933	10.1	10.0	03/31/25
25C1879-03 [SB-003 (8-10)]	B401933	10.0	10.0	03/31/25

Prep Method:SW-846 3546 **Analytical Method:SW-846 8082A**

Lab Number [Field ID]	Batch	Initial [g]	Final [mL]	Date
25C1879-04 [SB-001 (13-15)]	B402488	10.2	10.0	04/08/25
25C1879-05 [SB-002 (13-15)]	B402488	10.2	10.0	04/08/25
25C1879-06 [SB-003 (12-13)]	B402488	10.2	10.0	04/08/25

39 Spruce Street * East Longmeadow, MA 01028 * FAX 413/525-6405 * TEL. 413/525-2332

QUALITY CONTROL

Polychlorinated Biphenyls By GC/ECD - Quality Control

Analyte	Result	Reporting Limit	Units	Spike Level	Source Result	%REC	%REC Limits	RPD	RPD Limit	Notes
Batch B401933 - SW-846 3546										
Blank (B401933-BLK1)				Prepared: 03/31/25 Analyzed: 04/01/25						
Aroclor-1016	ND	0.020	mg/Kg wet							
Aroclor-1016 [2C]	ND	0.020	mg/Kg wet							
Aroclor-1221	ND	0.020	mg/Kg wet							
Aroclor-1221 [2C]	ND	0.020	mg/Kg wet							
Aroclor-1232	ND	0.020	mg/Kg wet							
Aroclor-1232 [2C]	ND	0.020	mg/Kg wet							
Aroclor-1242	ND	0.020	mg/Kg wet							
Aroclor-1242 [2C]	ND	0.020	mg/Kg wet							
Aroclor-1248	ND	0.020	mg/Kg wet							
Aroclor-1248 [2C]	ND	0.020	mg/Kg wet							
Aroclor-1254	ND	0.020	mg/Kg wet							
Aroclor-1254 [2C]	ND	0.020	mg/Kg wet							
Aroclor-1260	ND	0.020	mg/Kg wet							
Aroclor-1260 [2C]	ND	0.020	mg/Kg wet							
Aroclor-1262	ND	0.020	mg/Kg wet							
Aroclor-1262 [2C]	ND	0.020	mg/Kg wet							
Aroclor-1268	ND	0.020	mg/Kg wet							
Aroclor-1268 [2C]	ND	0.020	mg/Kg wet							
Surrogate: Decachlorobiphenyl	*0.210*		mg/Kg wet	0.1992		106	30-150			
Surrogate: Decachlorobiphenyl [2C]	*0.204*		mg/Kg wet	0.1992		102	30-150			
Surrogate: Tetrachloro-m-xylene	*0.202*		mg/Kg wet	0.1992		101	30-150			
Surrogate: Tetrachloro-m-xylene [2C]	*0.177*		mg/Kg wet	0.1992		89.0	30-150			
LCS (B401933-BS1)				Prepared: 03/31/25 Analyzed: 04/02/25						
Aroclor-1016	0.18	0.020	mg/Kg wet	0.1984		92.9	40-140			
Aroclor-1016 [2C]	0.17	0.020	mg/Kg wet	0.1984		84.1	40-140			
Aroclor-1260	0.20	0.020	mg/Kg wet	0.1984		99.0	40-140			
Aroclor-1260 [2C]	0.18	0.020	mg/Kg wet	0.1984		91.6	40-140			
Surrogate: Decachlorobiphenyl	*0.227*		mg/Kg wet	0.1984		114	30-150			
Surrogate: Decachlorobiphenyl [2C]	*0.204*		mg/Kg wet	0.1984		103	30-150			
Surrogate: Tetrachloro-m-xylene	*0.209*		mg/Kg wet	0.1984		105	30-150			
Surrogate: Tetrachloro-m-xylene [2C]	*0.173*		mg/Kg wet	0.1984		87.1	30-150			
LCS Dup (B401933-BSD1)				Prepared: 03/31/25 Analyzed: 04/02/25						
Aroclor-1016	0.17	0.020	mg/Kg wet	0.1982		88.0	40-140	5.39	30	
Aroclor-1016 [2C]	0.17	0.020	mg/Kg wet	0.1982		87.9	40-140	4.35	30	
Aroclor-1260	0.19	0.020	mg/Kg wet	0.1982		93.5	40-140	5.66	30	
Aroclor-1260 [2C]	0.19	0.020	mg/Kg wet	0.1982		95.7	40-140	4.31	30	
Surrogate: Decachlorobiphenyl	*0.211*		mg/Kg wet	0.1982		107	30-150			
Surrogate: Decachlorobiphenyl [2C]	*0.205*		mg/Kg wet	0.1982		103	30-150			
Surrogate: Tetrachloro-m-xylene	*0.198*		mg/Kg wet	0.1982		100	30-150			
Surrogate: Tetrachloro-m-xylene [2C]	*0.177*		mg/Kg wet	0.1982		89.2	30-150			

39 Spruce Street * East Longmeadow, MA 01028 * FAX 413/525-6405 * TEL. 413/525-2332

QUALITY CONTROL

Polychlorinated Biphenyls By GC/ECD - Quality Control

Analyte	Result	Reporting Limit	Units	Spike Level	Source Result	%REC	%REC Limits	RPD	RPD Limit	Notes
Batch B401933 - SW-846 3546										
Matrix Spike (B401933-MS1)	**Source: 25C1879-03**			Prepared: 03/31/25 Analyzed: 04/02/25						
Aroclor-1016	0.25	0.088	mg/Kg dry	0.2211	ND	112	40-140			
Aroclor-1016 [2C]	0.26	0.088	mg/Kg dry	0.2211	ND	117	40-140			
Aroclor-1260	0.25	0.088	mg/Kg dry	0.2211	ND	115	40-140			
Aroclor-1260 [2C]	0.26	0.088	mg/Kg dry	0.2211	ND	116	40-140			
Surrogate: Decachlorobiphenyl	*0.259*		mg/Kg dry	0.2211		117	30-150			
Surrogate: Decachlorobiphenyl [2C]	*0.259*		mg/Kg dry	0.2211		117	30-150			
Surrogate: Tetrachloro-m-xylene	*0.232*		mg/Kg dry	0.2211		105	30-150			
Surrogate: Tetrachloro-m-xylene [2C]	*0.232*		mg/Kg dry	0.2211		105	30-150			
Matrix Spike Dup (B401933-MSD1)	**Source: 25C1879-03**			Prepared: 03/31/25 Analyzed: 04/02/25						
Aroclor-1016	0.23	0.089	mg/Kg dry	0.2213	ND	105	40-140	6.51	30	
Aroclor-1016 [2C]	0.25	0.089	mg/Kg dry	0.2213	ND	113	40-140	3.50	30	
Aroclor-1260	0.24	0.089	mg/Kg dry	0.2213	ND	110	40-140	4.01	30	
Aroclor-1260 [2C]	0.26	0.089	mg/Kg dry	0.2213	ND	117	40-140	0.427	30	
Surrogate: Decachlorobiphenyl	*0.249*		mg/Kg dry	0.2213		112	30-150			
Surrogate: Decachlorobiphenyl [2C]	*0.243*		mg/Kg dry	0.2213		110	30-150			
Surrogate: Tetrachloro-m-xylene	*0.225*		mg/Kg dry	0.2213		102	30-150			
Surrogate: Tetrachloro-m-xylene [2C]	*0.229*		mg/Kg dry	0.2213		103	30-150			
Batch B402488 - SW-846 3546										
Blank (B402488-BLK1)				Prepared: 04/08/25 Analyzed: 04/10/25						
Aroclor-1016	ND	0.020	mg/Kg wet							
Aroclor-1016 [2C]	ND	0.020	mg/Kg wet							
Aroclor-1221	ND	0.020	mg/Kg wet							
Aroclor-1221 [2C]	ND	0.020	mg/Kg wet							
Aroclor-1232	ND	0.020	mg/Kg wet							
Aroclor-1232 [2C]	ND	0.020	mg/Kg wet							
Aroclor-1242	ND	0.020	mg/Kg wet							
Aroclor-1242 [2C]	ND	0.020	mg/Kg wet							
Aroclor-1248	ND	0.020	mg/Kg wet							
Aroclor-1248 [2C]	ND	0.020	mg/Kg wet							
Aroclor-1254	ND	0.020	mg/Kg wet							
Aroclor-1254 [2C]	ND	0.020	mg/Kg wet							
Aroclor-1260	ND	0.020	mg/Kg wet							
Aroclor-1260 [2C]	ND	0.020	mg/Kg wet							
Aroclor-1262	ND	0.020	mg/Kg wet							
Aroclor-1262 [2C]	ND	0.020	mg/Kg wet							
Aroclor-1268	ND	0.020	mg/Kg wet							
Aroclor-1268 [2C]	ND	0.020	mg/Kg wet							
Surrogate: Decachlorobiphenyl	*0.176*		mg/Kg wet	0.1978		89.0	30-150			
Surrogate: Decachlorobiphenyl [2C]	*0.222*		mg/Kg wet	0.1978		112	30-150			
Surrogate: Tetrachloro-m-xylene	*0.162*		mg/Kg wet	0.1978		82.1	30-150			
Surrogate: Tetrachloro-m-xylene [2C]	*0.188*		mg/Kg wet	0.1978		95.3	30-150			

39 Spruce Street * East Longmeadow, MA 01028 * FAX 413/525-6405 * TEL. 413/525-2332

QUALITY CONTROL

Polychlorinated Biphenyls By GC/ECD - Quality Control

Analyte	Result	Reporting Limit	Units	Spike Level	Source Result	%REC	%REC Limits	RPD	RPD Limit	Notes
Batch B402488 - SW-846 3546										
LCS (B402488-BS1)				Prepared: 04/08/25 Analyzed: 04/10/25						
Aroclor-1016	0.16	0.020	mg/Kg wet	0.1980		78.9	40-140			
Aroclor-1016 [2C]	0.16	0.020	mg/Kg wet	0.1980		81.3	40-140			
Aroclor-1260	0.19	0.020	mg/Kg wet	0.1980		96.4	40-140			
Aroclor-1260 [2C]	0.18	0.020	mg/Kg wet	0.1980		90.8	40-140			
Surrogate: Decachlorobiphenyl	*0.177*		mg/Kg wet	0.1980		89.2	30-150			
Surrogate: Decachlorobiphenyl [2C]	*0.222*		mg/Kg wet	0.1980		112	30-150			
Surrogate: Tetrachloro-m-xylene	*0.175*		mg/Kg wet	0.1980		88.2	30-150			
Surrogate: Tetrachloro-m-xylene [2C]	*0.197*		mg/Kg wet	0.1980		99.3	30-150			
LCS Dup (B402488-BSD1)				Prepared: 04/08/25 Analyzed: 04/10/25						
Aroclor-1016	0.14	0.020	mg/Kg wet	0.1984		72.3	40-140	8.84	30	
Aroclor-1016 [2C]	0.15	0.020	mg/Kg wet	0.1984		74.8	40-140	8.30	30	
Aroclor-1260	0.18	0.020	mg/Kg wet	0.1984		91.9	40-140	4.76	30	
Aroclor-1260 [2C]	0.17	0.020	mg/Kg wet	0.1984		87.6	40-140	3.52	30	
Surrogate: Decachlorobiphenyl	*0.175*		mg/Kg wet	0.1984		88.4	30-150			
Surrogate: Decachlorobiphenyl [2C]	*0.220*		mg/Kg wet	0.1984		111	30-150			
Surrogate: Tetrachloro-m-xylene	*0.158*		mg/Kg wet	0.1984		79.6	30-150			
Surrogate: Tetrachloro-m-xylene [2C]	*0.185*		mg/Kg wet	0.1984		93.1	30-150			

39 Spruce Street * East Longmeadow, MA 01028 * FAX 413/525-6405 * TEL. 413/525-2332

QUALITY CONTROL

Petroleum Hydrocarbons Analyses - EPH - Quality Control

Analyte	Result	Reporting Limit	Units	Spike Level	Source Result	%REC	%REC Limits	RPD	RPD Limit	Notes
Batch B401934 - SW-846 3546										
Blank (B401934-BLK1)				Prepared: 03/31/25 Analyzed: 04/02/25						
C9-C18 Aliphatics	ND	10	mg/Kg wet							
C19-C36 Aliphatics	ND	10	mg/Kg wet							
Unadjusted C11-C22 Aromatics	ND	10	mg/Kg wet							
C11-C22 Aromatics	ND	10	mg/Kg wet							
Acenaphthene	ND	0.10	mg/Kg wet							
Acenaphthylene	ND	0.10	mg/Kg wet							
Anthracene	ND	0.10	mg/Kg wet							
Benzo(a)anthracene	ND	0.10	mg/Kg wet							
Benzo(a)pyrene	ND	0.10	mg/Kg wet							
Benzo(b)fluoranthene	ND	0.10	mg/Kg wet							
Benzo(g,h,i)perylene	ND	0.10	mg/Kg wet							
Benzo(k)fluoranthene	ND	0.10	mg/Kg wet							
Chrysene	ND	0.10	mg/Kg wet							
Dibenz(a,h)anthracene	ND	0.10	mg/Kg wet							
Fluoranthene	ND	0.10	mg/Kg wet							
Fluorene	ND	0.10	mg/Kg wet							
Indeno(1,2,3-cd)pyrene	ND	0.10	mg/Kg wet							
2-Methylnaphthalene	ND	0.10	mg/Kg wet							
Naphthalene	ND	0.10	mg/Kg wet							
Phenanthrene	ND	0.10	mg/Kg wet							
Pyrene	ND	0.10	mg/Kg wet							
Naphthalene-aliphatic fraction	ND	0.10	mg/Kg wet							
2-Methylnaphthalene-aliphatic fraction	ND	0.10	mg/Kg wet							
Surrogate: Chlorooctadecane (COD)	*3.63*		mg/Kg wet	4.995		72.7	40-140			
Surrogate: o-Terphenyl (OTP)	*4.15*		mg/Kg wet	4.995		83.1	40-140			
Surrogate: 2-Bromonaphthalene	*5.21*		mg/Kg wet	4.995		104	40-140			
Surrogate: 2-Fluorobiphenyl	*5.22*		mg/Kg wet	4.995		104	40-140			
LCS (B401934-BS1)				Prepared: 03/31/25 Analyzed: 04/02/25						
C9-C18 Aliphatics	26.8	10	mg/Kg wet	29.90		89.5	40-140			
C19-C36 Aliphatics	38.6	10	mg/Kg wet	39.86		96.8	40-140			
Unadjusted C11-C22 Aromatics	79.9	10	mg/Kg wet	84.70		94.3	40-140			
Acenaphthene	4.14	0.10	mg/Kg wet	4.983		83.2	40-140			
Acenaphthylene	3.77	0.10	mg/Kg wet	4.983		75.8	40-140			
Anthracene	4.53	0.10	mg/Kg wet	4.983		90.9	40-140			
Benzo(a)anthracene	4.57	0.10	mg/Kg wet	4.983		91.7	40-140			
Benzo(a)pyrene	4.56	0.10	mg/Kg wet	4.983		91.6	40-140			
Benzo(b)fluoranthene	4.43	0.10	mg/Kg wet	4.983		88.9	40-140			
Benzo(g,h,i)perylene	4.35	0.10	mg/Kg wet	4.983		87.3	40-140			
Benzo(k)fluoranthene	4.73	0.10	mg/Kg wet	4.983		94.8	40-140			
Chrysene	4.61	0.10	mg/Kg wet	4.983		92.6	40-140			
Dibenz(a,h)anthracene	4.48	0.10	mg/Kg wet	4.983		89.8	40-140			
Fluoranthene	4.57	0.10	mg/Kg wet	4.983		91.8	40-140			
Fluorene	4.38	0.10	mg/Kg wet	4.983		88.0	40-140			
Indeno(1,2,3-cd)pyrene	4.15	0.10	mg/Kg wet	4.983		83.2	40-140			
2-Methylnaphthalene	3.89	0.10	mg/Kg wet	4.983		78.2	40-140			
Naphthalene	3.61	0.10	mg/Kg wet	4.983		72.5	40-140			
Phenanthrene	4.49	0.10	mg/Kg wet	4.983		90.1	40-140			
Pyrene	4.61	0.10	mg/Kg wet	4.983		92.5	40-140			
Naphthalene-aliphatic fraction	ND	0.10	mg/Kg wet	4.983			0-5			
2-Methylnaphthalene-aliphatic fraction	ND	0.10	mg/Kg wet	4.983			0-5			
Surrogate: Chlorooctadecane (COD)	*4.23*		mg/Kg wet	4.983		84.9	40-140			

39 Spruce Street * East Longmeadow, MA 01028 * FAX 413/525-6405 * TEL. 413/525-2332

QUALITY CONTROL

Petroleum Hydrocarbons Analyses - EPH - Quality Control

Analyte	Result	Reporting Limit	Units	Spike Level	Source Result	%REC	%REC Limits	RPD	RPD Limit	Notes
Batch B401934 - SW-846 3546										
LCS (B401934-BS1)				Prepared: 03/31/25 Analyzed: 04/02/25						
Surrogate: o-Terphenyl (OTP)	*4.55*		mg/Kg wet	4.983		91.4	40-140			
Surrogate: 2-Bromonaphthalene	*4.96*		mg/Kg wet	4.983		99.6	40-140			
Surrogate: 2-Fluorobiphenyl	*5.00*		mg/Kg wet	4.983		100	40-140			
LCS Dup (B401934-BSD1)				Prepared: 03/31/25 Analyzed: 04/02/25						
C9-C18 Aliphatics	24.0	10	mg/Kg wet	29.90		80.4	40-140	10.7	25	
C19-C36 Aliphatics	33.1	10	mg/Kg wet	39.86		83.1	40-140	15.2	25	
Unadjusted C11-C22 Aromatics	76.8	10	mg/Kg wet	84.70		90.6	40-140	3.95	25	
Acenaphthene	4.02	0.10	mg/Kg wet	4.983		80.6	40-140	3.07	25	
Acenaphthylene	3.68	0.10	mg/Kg wet	4.983		73.8	40-140	2.63	25	
Anthracene	4.40	0.10	mg/Kg wet	4.983		88.3	40-140	2.80	25	
Benzo(a)anthracene	4.44	0.10	mg/Kg wet	4.983		89.1	40-140	2.91	25	
Benzo(a)pyrene	4.43	0.10	mg/Kg wet	4.983		88.9	40-140	2.96	25	
Benzo(b)fluoranthene	4.30	0.10	mg/Kg wet	4.983		86.3	40-140	2.96	25	
Benzo(g,h,i)perylene	4.24	0.10	mg/Kg wet	4.983		85.1	40-140	2.56	25	
Benzo(k)fluoranthene	4.60	0.10	mg/Kg wet	4.983		92.4	40-140	2.61	25	
Chrysene	4.48	0.10	mg/Kg wet	4.983		89.9	40-140	2.94	25	
Dibenz(a,h)anthracene	4.35	0.10	mg/Kg wet	4.983		87.2	40-140	2.95	25	
Fluoranthene	4.42	0.10	mg/Kg wet	4.983		88.7	40-140	3.41	25	
Fluorene	4.23	0.10	mg/Kg wet	4.983		85.0	40-140	3.44	25	
Indeno(1,2,3-cd)pyrene	4.03	0.10	mg/Kg wet	4.983		81.0	40-140	2.75	25	
2-Methylnaphthalene	3.86	0.10	mg/Kg wet	4.983		77.4	40-140	0.918	25	
Naphthalene	3.61	0.10	mg/Kg wet	4.983		72.5	40-140	0.00554	25	
Phenanthrene	4.34	0.10	mg/Kg wet	4.983		87.1	40-140	3.37	25	
Pyrene	4.46	0.10	mg/Kg wet	4.983		89.6	40-140	3.19	25	
Naphthalene-aliphatic fraction	ND	0.10	mg/Kg wet	4.983			0-5			
2-Methylnaphthalene-aliphatic fraction	ND	0.10	mg/Kg wet	4.983			0-5			
Surrogate: Chlorooctadecane (COD)	*3.74*		mg/Kg wet	4.983		75.1	40-140			
Surrogate: o-Terphenyl (OTP)	*4.46*		mg/Kg wet	4.983		89.4	40-140			
Surrogate: 2-Bromonaphthalene	*5.08*		mg/Kg wet	4.983		102	40-140			
Surrogate: 2-Fluorobiphenyl	*5.15*		mg/Kg wet	4.983		103	40-140			
Matrix Spike (B401934-MS1)		**Source: 25C1879-01**		Prepared: 03/31/25 Analyzed: 04/02/25						
C9-C18 Aliphatics	24.5	11	mg/Kg dry	31.92	ND	76.9	40-140			
C19-C36 Aliphatics	35.7	11	mg/Kg dry	42.56	ND	83.9	40-140			
Unadjusted C11-C22 Aromatics	95.2	11	mg/Kg dry	90.45	ND	105	40-140			
Acenaphthene	4.97	0.11	mg/Kg dry	5.321	ND	93.4	40-140			
Acenaphthylene	4.55	0.11	mg/Kg dry	5.321	ND	85.5	40-140			
Anthracene	5.52	0.11	mg/Kg dry	5.321	ND	104	40-140			
Benzo(a)anthracene	5.65	0.11	mg/Kg dry	5.321	ND	106	40-140			
Benzo(a)pyrene	5.61	0.11	mg/Kg dry	5.321	ND	105	40-140			
Benzo(b)fluoranthene	5.46	0.11	mg/Kg dry	5.321	ND	103	40-140			
Benzo(g,h,i)perylene	5.28	0.11	mg/Kg dry	5.321	ND	99.2	40-140			
Benzo(k)fluoranthene	5.77	0.11	mg/Kg dry	5.321	ND	109	40-140			
Chrysene	5.67	0.11	mg/Kg dry	5.321	ND	107	40-140			
Dibenz(a,h)anthracene	5.44	0.11	mg/Kg dry	5.321	ND	102	40-140			
Fluoranthene	5.66	0.11	mg/Kg dry	5.321	ND	106	40-140			
Fluorene	5.26	0.11	mg/Kg dry	5.321	ND	98.9	40-140			
Indeno(1,2,3-cd)pyrene	5.03	0.11	mg/Kg dry	5.321	ND	94.6	40-140			
2-Methylnaphthalene	4.75	0.11	mg/Kg dry	5.321	ND	89.3	40-140			
Naphthalene	4.46	0.11	mg/Kg dry	5.321	ND	83.8	40-140			
Phenanthrene	5.48	0.11	mg/Kg dry	5.321	ND	103	40-140			

39 Spruce Street * East Longmeadow, MA 01028 * FAX 413/525-6405 * TEL. 413/525-2332

QUALITY CONTROL

Petroleum Hydrocarbons Analyses - EPH - Quality Control

Analyte	Result	Reporting Limit	Units	Spike Level	Source Result	%REC	%REC Limits	RPD	RPD Limit	Notes
Batch B401934 - SW-846 3546										
Matrix Spike (B401934-MS1)	**Source: 25C1879-01**			Prepared: 03/31/25 Analyzed: 04/02/25						
Pyrene	5.71	0.11	mg/Kg dry	5.321	ND	107	40-140			
Surrogate: Chlorooctadecane (COD)	*3.98*		mg/Kg dry	5.321		74.8	40-140			
Surrogate: o-Terphenyl (OTP)	*5.57*		mg/Kg dry	5.321		105	40-140			
Surrogate: 2-Bromonaphthalene	*6.80*		mg/Kg dry	5.321		128	40-140			
Surrogate: 2-Fluorobiphenyl	*6.83*		mg/Kg dry	5.321		128	40-140			
Matrix Spike Dup (B401934-MSD1)	**Source: 25C1879-01**			Prepared: 03/31/25 Analyzed: 04/02/25						
C9-C18 Aliphatics	24.7	11	mg/Kg dry	31.97	ND	77.1	40-140	0.428	50	
C19-C36 Aliphatics	35.3	11	mg/Kg dry	42.63	ND	82.9	40-140	1.04	50	
Unadjusted C11-C22 Aromatics	80.1	11	mg/Kg dry	90.58	ND	88.4	40-140	17.3	50	
Acenaphthene	4.15	0.11	mg/Kg dry	5.328	ND	77.8	40-140	18.0	50	
Acenaphthylene	3.80	0.11	mg/Kg dry	5.328	ND	71.2	40-140	18.1	50	
Anthracene	4.55	0.11	mg/Kg dry	5.328	ND	85.4	40-140	19.3	50	
Benzo(a)anthracene	4.66	0.11	mg/Kg dry	5.328	ND	87.4	40-140	19.3	50	
Benzo(a)pyrene	4.64	0.11	mg/Kg dry	5.328	ND	87.0	40-140	19.1	50	
Benzo(b)fluoranthene	4.50	0.11	mg/Kg dry	5.328	ND	84.5	40-140	19.2	50	
Benzo(g,h,i)perylene	4.41	0.11	mg/Kg dry	5.328	ND	82.7	40-140	17.9	50	
Benzo(k)fluoranthene	4.78	0.11	mg/Kg dry	5.328	ND	89.8	40-140	18.8	50	
Chrysene	4.68	0.11	mg/Kg dry	5.328	ND	87.8	40-140	19.2	50	
Dibenz(a,h)anthracene	4.51	0.11	mg/Kg dry	5.328	ND	84.7	40-140	18.7	50	
Fluoranthene	4.67	0.11	mg/Kg dry	5.328	ND	87.6	40-140	19.3	50	
Fluorene	4.36	0.11	mg/Kg dry	5.328	ND	81.8	40-140	18.8	50	
Indeno(1,2,3-cd)pyrene	4.19	0.11	mg/Kg dry	5.328	ND	78.6	40-140	18.3	50	
2-Methylnaphthalene	3.96	0.11	mg/Kg dry	5.328	ND	74.3	40-140	18.2	50	
Naphthalene	3.69	0.11	mg/Kg dry	5.328	ND	69.3	40-140	18.8	50	
Phenanthrene	4.53	0.11	mg/Kg dry	5.328	ND	85.1	40-140	19.0	50	
Pyrene	4.71	0.11	mg/Kg dry	5.328	ND	88.3	40-140	19.3	50	
Surrogate: Chlorooctadecane (COD)	*3.70*		mg/Kg dry	5.328		69.5	40-140			
Surrogate: o-Terphenyl (OTP)	*4.58*		mg/Kg dry	5.328		85.9	40-140			
Surrogate: 2-Bromonaphthalene	*5.72*		mg/Kg dry	5.328		107	40-140			
Surrogate: 2-Fluorobiphenyl	*5.78*		mg/Kg dry	5.328		109	40-140			
Batch B402506 - SW-846 3546										
Blank (B402506-BLK1)				Prepared: 04/08/25 Analyzed: 04/09/25						
C9-C18 Aliphatics	ND	9.7	mg/Kg wet							
C19-C36 Aliphatics	ND	9.7	mg/Kg wet							
Unadjusted C11-C22 Aromatics	ND	9.7	mg/Kg wet							
C11-C22 Aromatics	ND	9.7	mg/Kg wet							
Acenaphthene	ND	0.097	mg/Kg wet							
Acenaphthylene	ND	0.097	mg/Kg wet							
Anthracene	ND	0.097	mg/Kg wet							
Benzo(a)anthracene	ND	0.097	mg/Kg wet							
Benzo(a)pyrene	ND	0.097	mg/Kg wet							
Benzo(b)fluoranthene	ND	0.097	mg/Kg wet							
Benzo(g,h,i)perylene	ND	0.097	mg/Kg wet							
Benzo(k)fluoranthene	ND	0.097	mg/Kg wet							
Chrysene	ND	0.097	mg/Kg wet							
Dibenz(a,h)anthracene	ND	0.097	mg/Kg wet							
Fluoranthene	ND	0.097	mg/Kg wet							
Fluorene	ND	0.097	mg/Kg wet							
Indeno(1,2,3-cd)pyrene	ND	0.097	mg/Kg wet							
2-Methylnaphthalene	ND	0.097	mg/Kg wet							

39 Spruce Street * East Longmeadow, MA 01028 * FAX 413/525-6405 * TEL. 413/525-2332

QUALITY CONTROL

Petroleum Hydrocarbons Analyses - EPH - Quality Control

Analyte	Result	Reporting Limit	Units	Spike Level	Source Result	%REC	%REC Limits	RPD	RPD Limit	Notes
Batch B402506 - SW-846 3546										
Blank (B402506-BLK1)				Prepared: 04/08/25 Analyzed: 04/09/25						
Naphthalene	ND	0.097	mg/Kg wet							
Phenanthrene	ND	0.097	mg/Kg wet							
Pyrene	ND	0.097	mg/Kg wet							
Naphthalene-aliphatic fraction	ND	0.097	mg/Kg wet							
2-Methylnaphthalene-aliphatic fraction	ND	0.097	mg/Kg wet							
Surrogate: Chlorooctadecane (COD)	*3.88*		mg/Kg wet	4.845		80.0	40-140			
Surrogate: o-Terphenyl (OTP)	*3.75*		mg/Kg wet	4.845		77.5	40-140			
Surrogate: 2-Bromonaphthalene	*4.38*		mg/Kg wet	4.845		90.4	40-140			
Surrogate: 2-Fluorobiphenyl	*4.47*		mg/Kg wet	4.845		92.2	40-140			
LCS (B402506-BS1)				Prepared: 04/08/25 Analyzed: 04/09/25						
C9-C18 Aliphatics	28.0	9.9	mg/Kg wet	29.75		94.0	40-140			
C19-C36 Aliphatics	39.6	9.9	mg/Kg wet	39.66		99.8	40-140			
Unadjusted C11-C22 Aromatics	70.7	9.9	mg/Kg wet	84.28		83.9	40-140			
Acenaphthene	3.66	0.099	mg/Kg wet	4.958		73.8	40-140			
Acenaphthylene	3.34	0.099	mg/Kg wet	4.958		67.5	40-140			
Anthracene	3.95	0.099	mg/Kg wet	4.958		79.6	40-140			
Benzo(a)anthracene	3.82	0.099	mg/Kg wet	4.958		77.1	40-140			
Benzo(a)pyrene	3.75	0.099	mg/Kg wet	4.958		75.6	40-140			
Benzo(b)fluoranthene	3.63	0.099	mg/Kg wet	4.958		73.1	40-140			
Benzo(g,h,i)perylene	3.56	0.099	mg/Kg wet	4.958		71.7	40-140			
Benzo(k)fluoranthene	3.82	0.099	mg/Kg wet	4.958		77.1	40-140			
Chrysene	3.81	0.099	mg/Kg wet	4.958		76.9	40-140			
Dibenz(a,h)anthracene	3.66	0.099	mg/Kg wet	4.958		73.8	40-140			
Fluoranthene	3.92	0.099	mg/Kg wet	4.958		79.0	40-140			
Fluorene	3.85	0.099	mg/Kg wet	4.958		77.6	40-140			
Indeno(1,2,3-cd)pyrene	3.41	0.099	mg/Kg wet	4.958		68.7	40-140			
2-Methylnaphthalene	3.57	0.099	mg/Kg wet	4.958		71.9	40-140			
Naphthalene	3.38	0.099	mg/Kg wet	4.958		68.1	40-140			
Phenanthrene	3.91	0.099	mg/Kg wet	4.958		78.8	40-140			
Pyrene	3.93	0.099	mg/Kg wet	4.958		79.2	40-140			
Naphthalene-aliphatic fraction	ND	0.099	mg/Kg wet	4.958			0-5			
2-Methylnaphthalene-aliphatic fraction	0.0555	0.099	mg/Kg wet	4.958		1.12	0-5			
Surrogate: Chlorooctadecane (COD)	*3.72*		mg/Kg wet	4.958		75.0	40-140			
Surrogate: o-Terphenyl (OTP)	*3.80*		mg/Kg wet	4.958		76.6	40-140			
Surrogate: 2-Bromonaphthalene	*4.95*		mg/Kg wet	4.958		99.7	40-140			
Surrogate: 2-Fluorobiphenyl	*4.99*		mg/Kg wet	4.958		101	40-140			
LCS Dup (B402506-BSD1)				Prepared: 04/08/25 Analyzed: 04/09/25						
C9-C18 Aliphatics	28.6	9.9	mg/Kg wet	29.62		96.5	40-140	2.24	25	
C19-C36 Aliphatics	41.4	9.9	mg/Kg wet	39.49		105	40-140	4.34	25	
Unadjusted C11-C22 Aromatics	72.1	9.9	mg/Kg wet	83.91		85.9	40-140	1.98	25	
Acenaphthene	3.69	0.099	mg/Kg wet	4.936		74.8	40-140	0.888	25	
Acenaphthylene	3.35	0.099	mg/Kg wet	4.936		68.0	40-140	0.299	25	
Anthracene	4.00	0.099	mg/Kg wet	4.936		81.1	40-140	1.49	25	
Benzo(a)anthracene	3.89	0.099	mg/Kg wet	4.936		78.8	40-140	1.70	25	
Benzo(a)pyrene	3.85	0.099	mg/Kg wet	4.936		78.0	40-140	2.70	25	
Benzo(b)fluoranthene	3.72	0.099	mg/Kg wet	4.936		75.3	40-140	2.48	25	
Benzo(g,h,i)perylene	3.69	0.099	mg/Kg wet	4.936		74.7	40-140	3.70	25	
Benzo(k)fluoranthene	3.92	0.099	mg/Kg wet	4.936		79.4	40-140	2.56	25	
Chrysene	3.86	0.099	mg/Kg wet	4.936		78.2	40-140	1.17	25	
Dibenz(a,h)anthracene	3.78	0.099	mg/Kg wet	4.936		76.5	40-140	3.19	25	

39 Spruce Street * East Longmeadow, MA 01028 * FAX 413/525-6405 * TEL. 413/525-2332

QUALITY CONTROL

Petroleum Hydrocarbons Analyses - EPH - Quality Control

Analyte	Result	Reporting Limit	Units	Spike Level	Source Result	%REC	%REC Limits	RPD	RPD Limit	Notes
Batch B402506 - SW-846 3546										
LCS Dup (B402506-BSD1)				Prepared: 04/08/25 Analyzed: 04/09/25						
Fluoranthene	3.97	0.099	mg/Kg wet	4.936		80.4	40-140	1.35	25	
Fluorene	3.91	0.099	mg/Kg wet	4.936		79.2	40-140	1.56	25	
Indeno(1,2,3-cd)pyrene	3.58	0.099	mg/Kg wet	4.936		72.4	40-140	4.84	25	
2-Methylnaphthalene	3.52	0.099	mg/Kg wet	4.936		71.3	40-140	1.38	25	
Naphthalene	3.32	0.099	mg/Kg wet	4.936		67.4	40-140	1.56	25	
Phenanthrene	3.96	0.099	mg/Kg wet	4.936		80.1	40-140	1.18	25	
Pyrene	3.99	0.099	mg/Kg wet	4.936		80.8	40-140	1.55	25	
Naphthalene-aliphatic fraction	ND	0.099	mg/Kg wet	4.936			0-5			
2-Methylnaphthalene-aliphatic fraction	0.0528	0.099	mg/Kg wet	4.936		1.07	0-5			
Surrogate: Chlorooctadecane (COD)	*3.86*		mg/Kg wet	4.936		78.2	40-140			
Surrogate: o-Terphenyl (OTP)	*3.88*		mg/Kg wet	4.936		78.6	40-140			
Surrogate: 2-Bromonaphthalene	*4.64*		mg/Kg wet	4.936		94.1	40-140			
Surrogate: 2-Fluorobiphenyl	*4.78*		mg/Kg wet	4.936		96.9	40-140			

Pace Analytical Services, LLC - East Longmeadow, Ma

39 Spruce Street * East Longmeadow, MA 01028 * FAX 413/525-6405 * TEL. 413/525-2332

IDENTIFICATION SUMMARY
FOR SINGLE COMPONENT ANALYTES

SW-846 8082A

LCS

Lab Sample ID: B401933-BS1

Date(s) Analyzed: 04/02/2025 04/02/2025

Instrument ID (1): ECD4

Instrument ID (2): ECD4

GC Column (1): ID: (mm)

GC Column (2): ID: (mm)

ANALYTE	COL	RT	RT WINDOW		CONCENTRATION	%RPD
			FROM	TO		
Aroclor-1016	1	0.000	0.000	0.000	0.18	
	2	0.000	0.000	0.000	0.17	5.7
Aroclor-1260	1	0.000	0.000	0.000	0.20	
	2	0.000	0.000	0.000	0.18	10.5

Pace Analytical Services, LLC - East Longmeadow, Ma

39 Spruce Street * East Longmeadow, MA 01028 * FAX 413/525-6405 * TEL. 413/525-2332

IDENTIFICATION SUMMARY FOR SINGLE COMPONENT ANALYTES

SW-846 8082A

LCS Dup

Lab Sample ID: B401933-BSD1 Date(s) Analyzed: 04/02/2025 04/02/2025

Instrument ID (1): ECD4 Instrument ID (2): ECD4

GC Column (1): ID: (mm) GC Column (2): ID: (mm)

ANALYTE	COL	RT	RT WINDOW		CONCENTRATION	%RPD
			FROM	TO		
Aroclor-1016	1	0.000	0.000	0.000	0.17	
	2	0.000	0.000	0.000	0.17	0.0
Aroclor-1260	1	0.000	0.000	0.000	0.19	
	2	0.000	0.000	0.000	0.19	0.0

Pace Analytical Services, LLC - East Longmeadow, Ma

39 Spruce Street * East Longmeadow, MA 01028 * FAX 413/525-6405 * TEL. 413/525-2332

IDENTIFICATION SUMMARY FOR SINGLE COMPONENT ANALYTES

SW-846 8082A

Matrix Spike

Lab Sample ID: B401933-MS1

Date(s) Analyzed: 04/02/2025 04/02/2025

Instrument ID (1): ECD4

Instrument ID (2): ECD4

GC Column (1): ID: (mm)

GC Column (2): ID: (mm)

ANALYTE	COL	RT	RT WINDOW		CONCENTRATION	%RPD
			FROM	TO		
Aroclor-1016	1	0.000	0.000	0.000	0.25	
	2	0.000	0.000	0.000	0.26	3.9
Aroclor-1260	1	0.000	0.000	0.000	0.25	
	2	0.000	0.000	0.000	0.26	3.9

Pace Analytical Services, LLC - East Longmeadow, Ma

39 Spruce Street * East Longmeadow, MA 01028 * FAX 413/525-6405 * TEL. 413/525-2332

IDENTIFICATION SUMMARY FOR SINGLE COMPONENT ANALYTES

SW-846 8082A

Matrix Spike Dup

Lab Sample ID: B401933-MSD1

Date(s) Analyzed: 04/02/2025 04/02/2025

Instrument ID (1): ECD4

Instrument ID (2): ECD4

GC Column (1): ID: (mm)

GC Column (2): ID: (mm)

ANALYTE	COL	RT	RT WINDOW		CONCENTRATION	%RPD
			FROM	TO		
Aroclor-1016	1	0.000	0.000	0.000	0.23	
	2	0.000	0.000	0.000	0.25	8.3
Aroclor-1260	1	0.000	0.000	0.000	0.24	
	2	0.000	0.000	0.000	0.26	8.0

Pace Analytical Services, LLC - East Longmeadow, Ma

39 Spruce Street * East Longmeadow, MA 01028 * FAX 413/525-6405 * TEL. 413/525-2332

IDENTIFICATION SUMMARY FOR SINGLE COMPONENT ANALYTES

SW-846 8082A

LCS

Lab Sample ID: B402488-BS1 Date(s) Analyzed: 04/10/2025 04/10/2025

Instrument ID (1): ECD 9 Instrument ID (2): ECD 9

GC Column (1): ID: (mm) GC Column (2): ID: (mm)

ANALYTE	COL	RT	RT WINDOW		CONCENTRATION	%RPD
			FROM	TO		
Aroclor-1016	1	0.000	0.000	0.000	0.16	
	2	0.000	0.000	0.000	0.16	0.0
Aroclor-1260	1	0.000	0.000	0.000	0.19	
	2	0.000	0.000	0.000	0.18	5.4

Pace Analytical Services, LLC - East Longmeadow, Ma

39 Spruce Street * East Longmeadow, MA 01028 * FAX 413/525-6405 * TEL. 413/525-2332

IDENTIFICATION SUMMARY FOR SINGLE COMPONENT ANALYTES

SW-846 8082A

LCS Dup

Lab Sample ID: B402488-BSD1 Date(s) Analyzed: 04/10/2025 04/10/2025

Instrument ID (1): ECD 9 Instrument ID (2): ECD 9

GC Column (1): ID: (mm) GC Column (2): ID: (mm)

ANALYTE	COL	RT	RT WINDOW		CONCENTRATION	%RPD
			FROM	TO		
Aroclor-1016	1	0.000	0.000	0.000	0.14	
	2	0.000	0.000	0.000	0.15	6.9
Aroclor-1260	1	0.000	0.000	0.000	0.18	
	2	0.000	0.000	0.000	0.17	5.7

39 Spruce Street * East Longmeadow, MA 01028 * FAX 413/525-6405 * TEL. 413/525-2332

FLAG/QUALIFIER SUMMARY

*	QC result is outside of established limits.
†	Wide recovery limits established for difficult compound.
‡	Wide RPD limits established for difficult compound.
#	Data exceeded client recommended or regulatory level
ND	Not Detected
RL	Reporting Limit is at the level of quantitation (LOQ)
DL	Detection Limit is the lower limit of detection determined by the MDL study
MCL	Maximum Contaminant Level
	Percent recoveries and relative percent differences (RPDs) are determined by the software using values in the calculation which have not been rounded.
	No results have been blank subtracted unless specified in the case narrative section.
H-10	Analysis was requested after the recommended holding time had passed.
O-32	A dilution was performed as part of the standard analytical procedure.

39 Spruce Street * East Longmeadow, MA 01028 * FAX 413/525-6405 * TEL. 413/525-2332

CERTIFICATIONS

Certified Analyses included in this Report

Analyte	Certifications
MADEP EPH rev 2.1 in Soil	
C9-C18 Aliphatics	CT,NC,ME,NH-P
C19-C36 Aliphatics	CT,NC,ME,NH-P
Unadjusted C11-C22 Aromatics	CT,NC,ME,NH-P
C11-C22 Aromatics	CT,NC,ME,NH-P
Acenaphthene	CT,NC,ME,NH-P
Acenaphthylene	CT,NC,ME,NH-P
Anthracene	CT,NC,ME,NH-P
Benzo(a)anthracene	CT,NC,ME,NH-P
Benzo(a)pyrene	CT,NC,ME,NH-P
Benzo(b)fluoranthene	CT,NC,ME,NH-P
Benzo(g,h,i)perylene	CT,NC,ME,NH-P
Benzo(k)fluoranthene	CT,NC,ME,NH-P
Chrysene	CT,NC,ME,NH-P
Dibenz(a,h)anthracene	CT,NC,ME,NH-P
Fluoranthene	CT,NC,ME,NH-P
Fluorene	CT,NC,ME
Indeno(1,2,3-cd)pyrene	CT,NC,ME,NH-P
2-Methylnaphthalene	CT,NC
Naphthalene	CT,NC,ME,NH-P
Phenanthrene	CT,NC,ME,NH-P
Pyrene	CT,NC,ME,NH-P
MADEP EPH rev 2.1 in Water	
C9-C18 Aliphatics	CT,NC,ME,NH-P
C19-C36 Aliphatics	CT,NC,ME,NH-P
Unadjusted C11-C22 Aromatics	CT,NC,ME,NH-P
C11-C22 Aromatics	CT,NC,ME,NH-P
Acenaphthene	CT,NC,ME,NH-P
Acenaphthylene	CT,NC,ME,NH-P
Anthracene	CT,NC,ME,NH-P
Benzo(a)anthracene	CT,NC,ME,NH-P
Benzo(a)pyrene	CT,NC,ME,NH-P
Benzo(b)fluoranthene	CT,NC,ME,NH-P
Benzo(g,h,i)perylene	CT,NC,ME,NH-P
Benzo(k)fluoranthene	CT,NC,ME,NH-P
Chrysene	CT,NC,ME,NH-P
Dibenz(a,h)anthracene	CT,NC,ME,NH-P
Fluoranthene	CT,NC,ME,NH-P
Fluorene	CT,NC,ME
Indeno(1,2,3-cd)pyrene	CT,NC,ME,NH-P
2-Methylnaphthalene	CT,NC
Naphthalene	CT,NC,ME,NH-P
Phenanthrene	CT,NC,ME,NH-P
Pyrene	CT,NC,ME,NH-P
SW-846 8082A in Soil	
Aroclor-1016	CT,NH,NY,NC,ME,VA,PA,NJ
Aroclor-1016 [2C]	CT,NH,NY,NC,ME,VA,PA,NJ

39 Spruce Street * East Longmeadow, MA 01028 * FAX 413/525-6405 * TEL. 413/525-2332

CERTIFICATIONS

Certified Analyses included in this Report

Analyte	Certifications
SW-846 8082A in Soil	
Aroclor-1221	CT,NH,NY,NC,ME,VA,PA,NJ
Aroclor-1221 [2C]	CT,NH,NY,NC,ME,VA,PA,NJ
Aroclor-1232	CT,NH,NY,NC,ME,VA,PA,NJ
Aroclor-1232 [2C]	CT,NH,NY,NC,ME,VA,PA,NJ
Aroclor-1242	CT,NH,NY,NC,ME,VA,PA,NJ
Aroclor-1242 [2C]	CT,NH,NY,NC,ME,VA,PA,NJ
Aroclor-1248	CT,NH,NY,NC,ME,VA,PA,NJ
Aroclor-1248 [2C]	CT,NH,NY,NC,ME,VA,PA,NJ
Aroclor-1254	CT,NH,NY,NC,ME,VA,PA,NJ
Aroclor-1254 [2C]	CT,NH,NY,NC,ME,VA,PA,NJ
Aroclor-1260	CT,NH,NY,NC,ME,VA,PA,NJ
Aroclor-1260 [2C]	CT,NH,NY,NC,ME,VA,PA,NJ
Aroclor-1262	NH,NY,NC,ME,VA,PA,NJ
Aroclor-1262 [2C]	NH,NY,NC,ME,VA,PA,NJ
Aroclor-1268	NH,NY,NC,ME,VA,PA,NJ
Aroclor-1268 [2C]	NH,NY,NC,ME,VA,PA,NJ
SW-846 8082A in Water	
Aroclor-1016	CT,NH,NY,NC,ME,VA,PA,NJ
Aroclor-1016 [2C]	CT,NH,NY,NC,ME,VA,PA,NJ
Aroclor-1221	CT,NH,NY,NC,ME,VA,PA,NJ
Aroclor-1221 [2C]	CT,NH,NY,NC,ME,VA,PA,NJ
Aroclor-1232	CT,NH,NY,NC,ME,VA,PA,NJ
Aroclor-1232 [2C]	CT,NH,NY,NC,ME,VA,PA,NJ
Aroclor-1242	CT,NH,NY,NC,ME,VA,PA,NJ
Aroclor-1242 [2C]	CT,NH,NY,NC,ME,VA,PA,NJ
Aroclor-1248	CT,NH,NY,NC,ME,VA,PA,NJ
Aroclor-1248 [2C]	CT,NH,NY,NC,ME,VA,PA,NJ
Aroclor-1254	CT,NH,NY,NC,ME,VA,PA,NJ
Aroclor-1254 [2C]	CT,NH,NY,NC,ME,VA,PA,NJ
Aroclor-1260	CT,NH,NY,NC,ME,VA,PA,NJ
Aroclor-1260 [2C]	CT,NH,NY,NC,ME,VA,PA,NJ
Aroclor-1262	NH,NY,NC,ME,VA,PA,NJ
Aroclor-1262 [2C]	NH,NY,NC,ME,VA,PA,NJ
Aroclor-1268	NH,NY,NC,ME,VA,PA,NJ
Aroclor-1268 [2C]	NH,NY,NC,ME,VA,PA,NJ

Pace Analytical Services, LLC - East Longmeadow, Ma

39 Spruce Street * East Longmeadow, MA 01028 * FAX 413/525-6405 * TEL. 413/525-2332

Pace Analytical Services, LLC - East Longmeadow, Ma, operates under the following certifications and accreditations:

Code	Description	Number	Expires
CT	Connecticut Department of Public Health	PH-0821	12/31/2026
NY	New York State Department of Health	10899 NELAP	04/1/2026
NH	New Hampshire Environmental Lab	2516 NELAP	02/5/2026
NC	North Carolina Div. of Water Quality	652	12/31/2025
NJ	New Jersey DEP	MA007 NELAP	06/30/2025
ME	State of Maine	MA00100	06/9/2025
VA	Commonwealth of Virginia	460217	12/14/2025
NH-P	New Hampshire Environmental Lab	2557 NELAP	09/6/2025
PA	Commonwealth of Pennsylvania DEP	68-05812	06/30/2026

25C1879

http://www.pacelabs.com

Doc # 381 Rev 5_07/13/2021

Pace Analytical®

Phone: 413-525-2332
Fax: 413-525-6405
Access COC's and Support Requests

CHAIN OF CUSTODY RECORD

39 Spruce Street
East Longmeadow, MA 01028

Page 1 of 1

Company Name:	Roux
Address:	200 Summit Drive Suite 500 Burlington MA
Phone:	413 575 5232 781 569 4000
Project Name:	PVTA UMASS
Project Location:	185 Holdsworth Way Amherst MA
Project Number:	4218.0002M000
Project Manager:	Karrien Marius
Pace Quote Name/Number:	Q30853
Invoice Recipient:	
Sampled By:	Kyle McCaffary

Requested Turnaround Time
7-Day ☐ 10-Day ☐
PFAS 10-Day (std) ☐ Due Date:

Rush-Approval Required
1-Day ☐ 3-Day ☐
2-Day ☐ 4-Day ☐

Data Delivery
Format: PDF ☒ EXCEL ☒
Other: Equis EZ
CLP Like Data Pkg Required: ☐
Email To:
Fax To #:

Dissolved Metals Samples
○ Field Filtered
○ Lab to Filter

Orthophosphate Samples
○ Field Filtered
○ Lab to Filter

PCB ONLY
SOXHLET ☐
NON SOXHLET ☒

ANALYSIS REQUESTED

Pace Work Order#	Client Sample ID / Description	Beginning Date/Time	Ending Date/Time	COMP/GRAB	[1]Matrix Code	Conc Code	VIALS	GLASS	PLASTIC	BACTERIA	ENCORE	PCB EPA 8082A (1)	EPW w/ranges + targets (1)
1	SB-001 (8-10)		1100	G	S			X				X	X
2	SB-002 (11-13)		1310	G	S			X				X	X
3	SB-003 (8-10)		1200	G	S			X				X	X
4	SB-001 (13-15)		1130	G	S			X				X	X
5	SB-002 (13-15)		1330	G	S			X				X	X
6	SB-003 (12-13)		1230	G	S			X				X	X

[2] Preservation Code

Courier Use Only
Total Number Of:
VIALS____
GLASS____
PLASTIC____
BACTERIA____
ENCORE____

Glassware in the fridge? Y / N
Glassware in freezer? Y / N
Prepackaged Cooler? Y / N

*Pace Analytical is not responsible for missing samples from prepacked coolers

[1] **Matrix Codes:**
GW = Ground Water
WW = Waste Water
DW = Drinking Water
A = Air
S = Soil
SL = Sludge
SOL = Solid
O = Other (please define)

[2] **Preservation Codes:**
I = Iced
H = HCL
M = Methanol
N = Nitric Acid
S = Sulfuric Acid
B = Sodium Bisulfate
X = Sodium Hydroxide
T = Sodium Thiosulfate
O = Other (please define)

Relinquished by: (signature)	Date/Time:
[signature]	3/27/25 1730
Received by: (signature)	Date/Time:
[signature] 12	3/27/25 1730
Relinquished by: (signature)	Date/Time:
Received by: (signature)	Date/Time:
Relinquished by: (signature)	Date/Time:
Received by: (signature)	Date/Time:
Relinquished by: (signature)	Date/Time:
Received by: (signature)	Date/Time:

Client Comments: Please hold SB-001(13-15), SB-002(13-15) and SB-003(12-13) until instructed By Roux Personnel.

Detection Limit Requirements
MA
CT
Other:

Special Requirements
☒ MA MCP Required
MCP Certification Form Required
☐ CT RCP Required
RCP Certification Form Required
☐ MA State DW Required
PWSID #

Please use the following codes to indicate possible sample concentration within the Conc Code column above:
H - High; M - Medium; L - Low; C - Clean; U - Unknown

NELAC and AIHA-LAP, LLC Accredited

Project Entity
Government ☐ Municipality ☐ MWRA ☐ WRTA ☐
Federal ☐ 21 J ☐ School ☐
City ☐ Brownfield ☐ MBTA ☐

Other
☐ Chromatogram
☐ AIHA-LAP,LLC

Lab Comments:

Disclaimer: Pace Analytical is not responsible for any omitted information on the Chain of Custody. The Chain of Custody is a legal document that must be complete and accurate and is used to determine what analyses the laboratory will perform. Any missing information is not the laboratory's responsibility. Pace Analytical values your partnership on each project and will try to assist with missing information, but will not be held accountable.

Pace ANALYTICAL SERVICES	DC#_Title: ENV-FRM-ELON-0001 v08_Sample Receiving Checklist
	Effective Date: 06/11/2024

Log In Back-Sheet

Client Roux

Project PVTA UMASS

MCP/RCP Required MA. MCP

Deliverable Package Requirement M.D.E.

Location 185 Holdsworth Way Amherst MA

PWSID# (When Applicable) N/A

Arrival Method:

Courier ☑ Fed Ex ☐ Walk In ☐ Other ☐

Received By / Date / Time MEM / 3.27.25 / 1730

Back-Sheet By / Date / Time RL / 3-28-25 / 1204

Temperature Method gun # 6

WV samples: Yes (see note*) / (No) (follow normal procedure)

Temp < 6° C Actual Temperature 1.2

Rush Samples: Yes / (No) Notify

Short Hold: Yes / (No) Notify

Notes regarding Samples/COC outside of SOP:

All sampled on 3/27/25 based on Client label

Login Sample Receipt Checklist – (Rejection Criteria Listing – Using Acceptance Policy) Any False statement will be brought to the attention of the Client – True or False

	True	False
Received on Ice	☑	☐
Received in Cooler	☑	☐
Custody Seal: DATE TIME	☐	☑
COC Relinquished	☑	☐
COC/Samples Labels Agree	☑	☐
All Samples in Good Condition	☑	☐
Samples Received within Holding Time	☑	☐
Is there enough Volume	☑	☐
Proper Media/Container Used	☑	☐
Splitting Samples Required	☐	☑
MS/MSD	☐	☑
Trip Blanks	☐	☑
Lab to Filters	☐	☑
COC Legible	☑	☐

COC Included: (Check all included)

Client ☑ Analysis ☑ Sampler Name ☑

Project ☑ IDs ☑ Collection Date/Time ☑ (RV)

All Samples Proper pH: (N/A) ☐ ☐

Additional Container Notes

Note: West Virginia requires all samples to have their temperature taken. Note any outliers.

Pace ANALYTICAL SERVICES	DC#_Title: ENV-FRM-ELON-0001 v08_Sample Receiving Checklist
	Effective Date: 06/11/2024

Sample			1	2	3	4	5	6	7	8	9	10	11	12	13	14	15	16	17	18	19	20
16oz Amb/Clear	(Circle Amb/Clear)	Soils Jars																				
8oz Amb/Clear				(	(	(	(	(														
4oz Amb/Clear																						
2oz Amb/Clear																						
Unpreserved	1 Liter	Ambers																				
HCL																						
Sulfuric																						
Sulfuric	250mL																					
Phosphoric																						
HCl																						
Unpreserved	100mL																					
Unpreserved	1 Liter	Plastics																				
Sulfuric																						
Unpreserved	500mL																					
Sulfuric																						
Unpreserved	250mL																					
Trizma																						
Sulfuric																						
Nitric																						
NaOH																						
Ammonium Acetate																						
NaOH/Zinc																						
Unpreserved		VOA Vials																				
HCl																						
MeOH																						
D.I. Water																						
BiSulfate																						
Col/Bact		Other / Fill in																				

MADEP MCP Analytical Method Report Certification Form

Laboratory Name:	Pace New England	Project #:	25C1879
Project Location:	185 Holdsworth Way Amherst MA	RTN:	

This Form provides certifications for the following data set: [list Laboratory Sample ID Number(s)]

25C1879-01 thru 25C1879-06

Matrices: Soil

CAM Protocol (check all that below)

8260 VOC CAM II A ( )	7470/7471 Hg CAM IIIB ( )	MassDEP VPH (GC/PID/FID) CAM IV A ( )	8082 PCB CAM V A (X)	9014 Total Cyanide/PAC CAM VI A ( )	6860 Perchlorate CAM VIII B ( )
8270 SVOC CAM II B ( )	7010 Metals CAM III C ( )	MassDEP VPH (GC/MS) CAM IV C ( )	8081 Pesticides CAM V B ( )	7196 Hex Cr CAM VI B ( )	MassDEP APH CAM IX A ( )
6010 Metals CAM III A ( )	6020 Metals CAM III D ( )	MassDEP EPH CAM IV B (X)	8151 Herbicides CAM V C ( )	8330 Explosives CAM VIII A ( )	TO-15 VOC CAM IX B ( )

Affirmative response to Questions A throughF is required for "Presumptive Certainty" status

A	Were all samples received in a condition consistent with those described on the Chain-of-Custody, properly preserved (including temperature) in the field or laboratory, and prepared/analyzed within method holding times?	☑ Yes	☐ No[1]
B	Were the analytical method(s) and all associated QC requirements specificed in the selected CAM protocol(s) followed?	☑ Yes	☐ No[1]
C	Were all required corrective actions and analytical response actions specified in the selected CAM protocol(s) implemented for all identified performance standard non-conformances?	☑ Yes	☐ No[1]
D	Does the laboratory report comply with all the reporting requirements specified in CAM VII A, Quality Assurance and Quality Control Guidlines for the Acquisition and Reporting of Analytical Data?	☑ Yes	☐ No[1]
E a	VPH, EPH, and APH Methods only: Was each method conducted without significant modification(s)? (Refer to the individual method(s) for a list of significant modifications).	☑ Yes	☐ No[1]
E b	APH and TO-15 Methods only: Was the complete analyte list reported for each method?	☐ Yes	☐ No[1]
F	Were all applicable CAM protocol QC and performance standard non-conformances identified and evaluated in a laboratory narrative (including all No responses to Qestions A through E)?	☑ Yes	☐ No[1]

A response to questions G, H and I below is required for "Presumptive Certainty" status

G	Were the reporting limits at or below all CAM reporting limits specified in the selected CAM protocol(s)?	☑ Yes	☐ No[1]

<u>Data User Note:</u> Data that achieve "Presumptive Certainty" status may not necessarily meet the data usability and representativeness requirements described in 310 CMR 40. 1056 (2)(k) and WSC-07-350.

H	Were all QC perfomance standards specified in the CAM protocol(s) achieved?	☑ Yes	☐ No[1]
I	Were results reported for the complete analyte list specified in the selected CAM protocol(s)?	☑ Yes	☐ No[1]

[1] *All Negative responses must be addressed in an attached Environmental Laboratory case narrative.*

I, the undersigned, attest under the pains and penalties of perjury that, based upon my personal inquiry of those responsible for obtaining the information, the material contained in this analytical report is, to the best of my knowledge and belief, accurate and complete.

Signature: Meghan E. Kelley Position: Reporting Specialist

Printed Name: Meghan E. Kelley Date: 04/10/25

Pace Analytical Services, LLC - East Longmeadow, Ma

39 Spruce Street * East Longmeadow, MA 01028 * FAX 413/525-6405 * TEL. 413/525-2332

April 9, 2025

Kyle McCaffery
Roux Associates
200 Summit Drive, Suite 500
Burlington, MA 01803

Project Location: 185 Holdsworth Way., Amherst, MA
Client Job Number:
Project Number: 4218.0002M000
Laboratory Work Order Number: 25D0408

Enclosed are results of analyses for samples as received by the laboratory on April 4, 2025. If you have any questions concerning this report, please feel free to contact me.

Sincerely,

Karriem G. Marius
Project Manager

Table of Contents

Sample Summary 3

Case Narrative 4

Sample Results 5

25D0408-01 5

25D0408-02 7

25D0408-03 9

Sample Preparation Information 11

QC Data 12

Polychlorinated Biphenyls By GC/ECD 12

B402370 12

Petroleum Hydrocarbons Analyses - EPH 13

B402363 13

Dual Column RPD Report 15

Flag/Qualifier Summary 17

Certifications 18

Chain of Custody/Sample Receipt 20

Pace Analytical Services, LLC - East Longmeadow, Ma

39 Spruce Street * East Longmeadow, MA 01028 * FAX 413/525-6405 * TEL. 413/525-2332

Roux Associates
200 Summit Drive, Suite 500
Burlington, MA 01803
ATTN: Kyle McCaffery

REPORT DATE: 4/9/2025

PURCHASE ORDER NUMBER:

PROJECT NUMBER: 4218.0002M000

ANALYTICAL SUMMARY

WORK ORDER NUMBER: 25D0408

The results of analyses performed on the following samples submitted to Pace Analytical Services, LLC - East Longmeadow, Ma, are found in this report.

PROJECT LOCATION: 185 Holdsworth Way., Amherst, MA

FIELD SAMPLE #	LAB ID:	MATRIX	SAMPLE DESCRIPTION	TEST	SUB LAB
MW-1	25D0408-01	Ground Water		MADEP EPH rev 2.1	
				SW-846 8082A	
MW-2	25D0408-02	Ground Water		MADEP EPH rev 2.1	
				SW-846 8082A	
MW-3	25D0408-03	Ground Water		MADEP EPH rev 2.1	
				SW-846 8082A	

Pace Analytical Services, LLC - East Longmeadow, Ma

39 Spruce Street * East Longmeadow, MA 01028 * FAX 413/525-6405 * TEL. 413/525-2332

CASE NARRATIVE SUMMARY

All reported results are within defined laboratory quality control objectives unless listed below or otherwise qualified in this report.

The results of analyses reported only relate to samples submitted to Pace Analytical Services, LLC - East Longmeadow, Ma, for testing.
I certify that the analyses listed above, unless specifically listed as subcontracted, if any, were performed under my direction according to the approved methodologies listed in this document, and that based upon my inquiry of those individuals immediately responsible for obtaining the information, the material contained in this report is, to the best of my knowledge and belief, accurate and complete.

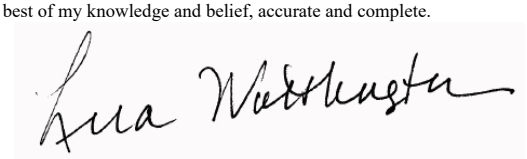

Lisa A. Worthington
Technical Representative

Pace Analytical Services, LLC - East Longmeadow, Ma

39 Spruce Street * East Longmeadow, MA 01028 * FAX 413/525-6405 * TEL. 413/525-2332

Project Location: 185 Holdsworth Way., Amherst, M Sample Description: Work Order: 25D0408

Date Received: 4/4/2025

Field Sample #: MW-1 Sampled: 4/4/2025 14:20

Sample ID: 25D0408-01

Sample Matrix: Ground Water

Polychlorinated Biphenyls By GC/ECD

Analyte	Results	RL	Units	Dilution	Flag/Qual	Method	Date Prepared	Date/Time Analyzed	Analyst
Aroclor-1016 [1]	ND	0.19	µg/L	1		SW-846 8082A	4/5/25	4/8/25 2:19	MEW
Aroclor-1221 [1]	ND	0.19	µg/L	1		SW-846 8082A	4/5/25	4/8/25 2:19	MEW
Aroclor-1232 [1]	ND	0.19	µg/L	1		SW-846 8082A	4/5/25	4/8/25 2:19	MEW
Aroclor-1242 [1]	ND	0.19	µg/L	1		SW-846 8082A	4/5/25	4/8/25 2:19	MEW
Aroclor-1248 [1]	ND	0.19	µg/L	1		SW-846 8082A	4/5/25	4/8/25 2:19	MEW
Aroclor-1254 [1]	ND	0.19	µg/L	1		SW-846 8082A	4/5/25	4/8/25 2:19	MEW
Aroclor-1260 [1]	ND	0.19	µg/L	1		SW-846 8082A	4/5/25	4/8/25 2:19	MEW
Aroclor-1262 [1]	ND	0.19	µg/L	1		SW-846 8082A	4/5/25	4/8/25 2:19	MEW
Aroclor-1268 [1]	ND	0.19	µg/L	1		SW-846 8082A	4/5/25	4/8/25 2:19	MEW

Surrogates	% Recovery	Recovery Limits	Flag/Qual	
Decachlorobiphenyl [1]	40.3	30-150		4/8/25 2:19
Decachlorobiphenyl [2]	48.8	30-150		4/8/25 2:19
Tetrachloro-m-xylene [1]	57.7	30-150		4/8/25 2:19
Tetrachloro-m-xylene [2]	68.8	30-150		4/8/25 2:19

Pace Analytical Services, LLC - East Longmeadow, Ma

39 Spruce Street * East Longmeadow, MA 01028 * FAX 413/525-6405 * TEL. 413/525-2332

Project Location: 185 Holdsworth Way., Amherst, M Sample Description: Work Order: 25D0408

Date Received: 4/4/2025

Field Sample #: MW-1 Sampled: 4/4/2025 14:20

Sample ID: 25D0408-01

Sample Matrix: Ground Water

Petroleum Hydrocarbons Analyses - EPH

Analyte	Results	RL	Units	Dilution	Flag/Qual	Method	Date Prepared	Date/Time Analyzed	Analyst
C9-C18 Aliphatics	ND	97	µg/L	1		MADEP EPH rev 2.1	4/5/25	4/7/25 14:38	SNB
C19-C36 Aliphatics	ND	97	µg/L	1		MADEP EPH rev 2.1	4/5/25	4/7/25 14:38	SNB
Unadjusted C11-C22 Aromatics	ND	97	µg/L	1		MADEP EPH rev 2.1	4/5/25	4/7/25 14:38	SNB
C11-C22 Aromatics	ND	97	µg/L	1		MADEP EPH rev 2.1	4/5/25	4/7/25 14:38	SNB
Acenaphthene	ND	1.9	µg/L	1		MADEP EPH rev 2.1	4/5/25	4/7/25 14:38	SNB
Acenaphthylene	ND	1.9	µg/L	1		MADEP EPH rev 2.1	4/5/25	4/7/25 14:38	SNB
Anthracene	ND	1.9	µg/L	1		MADEP EPH rev 2.1	4/5/25	4/7/25 14:38	SNB
Benzo(a)anthracene	ND	1.9	µg/L	1		MADEP EPH rev 2.1	4/5/25	4/7/25 14:38	SNB
Benzo(a)pyrene	ND	1.9	µg/L	1		MADEP EPH rev 2.1	4/5/25	4/7/25 14:38	SNB
Benzo(b)fluoranthene	ND	1.9	µg/L	1		MADEP EPH rev 2.1	4/5/25	4/7/25 14:38	SNB
Benzo(g,h,i)perylene	ND	1.9	µg/L	1		MADEP EPH rev 2.1	4/5/25	4/7/25 14:38	SNB
Benzo(k)fluoranthene	ND	1.9	µg/L	1		MADEP EPH rev 2.1	4/5/25	4/7/25 14:38	SNB
Chrysene	ND	1.9	µg/L	1		MADEP EPH rev 2.1	4/5/25	4/7/25 14:38	SNB
Dibenz(a,h)anthracene	ND	1.9	µg/L	1		MADEP EPH rev 2.1	4/5/25	4/7/25 14:38	SNB
Fluoranthene	ND	1.9	µg/L	1		MADEP EPH rev 2.1	4/5/25	4/7/25 14:38	SNB
Fluorene	ND	1.9	µg/L	1		MADEP EPH rev 2.1	4/5/25	4/7/25 14:38	SNB
Indeno(1,2,3-cd)pyrene	ND	1.9	µg/L	1		MADEP EPH rev 2.1	4/5/25	4/7/25 14:38	SNB
2-Methylnaphthalene	ND	1.9	µg/L	1		MADEP EPH rev 2.1	4/5/25	4/7/25 14:38	SNB
Naphthalene	ND	1.9	µg/L	1		MADEP EPH rev 2.1	4/5/25	4/7/25 14:38	SNB
Phenanthrene	ND	1.9	µg/L	1		MADEP EPH rev 2.1	4/5/25	4/7/25 14:38	SNB
Pyrene	ND	1.9	µg/L	1		MADEP EPH rev 2.1	4/5/25	4/7/25 14:38	SNB

Surrogates	% Recovery	Recovery Limits	Flag/Qual	
Chlorooctadecane (COD)	73.5	40-140		4/7/25 14:38
o-Terphenyl (OTP)	73.0	40-140		4/7/25 14:38
2-Bromonaphthalene	86.0	40-140		4/7/25 14:38
2-Fluorobiphenyl	87.6	40-140		4/7/25 14:38

Pace Analytical Services, LLC - East Longmeadow, Ma

39 Spruce Street * East Longmeadow, MA 01028 * FAX 413/525-6405 * TEL. 413/525-2332

Project Location: 185 Holdsworth Way., Amherst, M Sample Description: Work Order: 25D0408

Date Received: 4/4/2025

Field Sample #: MW-2 Sampled: 4/4/2025 10:20

Sample ID: 25D0408-02

Sample Matrix: Ground Water

Polychlorinated Biphenyls By GC/ECD

Analyte	Results	RL	Units	Dilution	Flag/Qual	Method	Date Prepared	Date/Time Analyzed	Analyst
Aroclor-1016 [1]	ND	0.19	µg/L	1		SW-846 8082A	4/5/25	4/8/25 2:36	MEW
Aroclor-1221 [1]	ND	0.19	µg/L	1		SW-846 8082A	4/5/25	4/8/25 2:36	MEW
Aroclor-1232 [1]	ND	0.19	µg/L	1		SW-846 8082A	4/5/25	4/8/25 2:36	MEW
Aroclor-1242 [1]	ND	0.19	µg/L	1		SW-846 8082A	4/5/25	4/8/25 2:36	MEW
Aroclor-1248 [1]	ND	0.19	µg/L	1		SW-846 8082A	4/5/25	4/8/25 2:36	MEW
Aroclor-1254 [1]	ND	0.19	µg/L	1		SW-846 8082A	4/5/25	4/8/25 2:36	MEW
Aroclor-1260 [1]	ND	0.19	µg/L	1		SW-846 8082A	4/5/25	4/8/25 2:36	MEW
Aroclor-1262 [1]	ND	0.19	µg/L	1		SW-846 8082A	4/5/25	4/8/25 2:36	MEW
Aroclor-1268 [1]	ND	0.19	µg/L	1		SW-846 8082A	4/5/25	4/8/25 2:36	MEW

Surrogates	% Recovery	Recovery Limits	Flag/Qual	
Decachlorobiphenyl [1]	57.3	30-150		4/8/25 2:36
Decachlorobiphenyl [2]	69.1	30-150		4/8/25 2:36
Tetrachloro-m-xylene [1]	55.6	30-150		4/8/25 2:36
Tetrachloro-m-xylene [2]	66.5	30-150		4/8/25 2:36

Pace Analytical Services, LLC - East Longmeadow, Ma

39 Spruce Street * East Longmeadow, MA 01028 * FAX 413/525-6405 * TEL. 413/525-2332

Project Location: 185 Holdsworth Way., Amherst, M Sample Description: Work Order: 25D0408

Date Received: 4/4/2025

Field Sample #: MW-2 Sampled: 4/4/2025 10:20

Sample ID: 25D0408-02

Sample Matrix: Ground Water

Petroleum Hydrocarbons Analyses - EPH

Analyte	Results	RL	Units	Dilution	Flag/Qual	Method	Date Prepared	Date/Time Analyzed	Analyst
C9-C18 Aliphatics	ND	95	µg/L	1		MADEP EPH rev 2.1	4/5/25	4/7/25 14:57	SNB
C19-C36 Aliphatics	ND	95	µg/L	1		MADEP EPH rev 2.1	4/5/25	4/7/25 14:57	SNB
Unadjusted C11-C22 Aromatics	ND	95	µg/L	1		MADEP EPH rev 2.1	4/5/25	4/7/25 14:57	SNB
C11-C22 Aromatics	ND	95	µg/L	1		MADEP EPH rev 2.1	4/5/25	4/7/25 14:57	SNB
Acenaphthene	ND	1.9	µg/L	1		MADEP EPH rev 2.1	4/5/25	4/7/25 14:57	SNB
Acenaphthylene	ND	1.9	µg/L	1		MADEP EPH rev 2.1	4/5/25	4/7/25 14:57	SNB
Anthracene	ND	1.9	µg/L	1		MADEP EPH rev 2.1	4/5/25	4/7/25 14:57	SNB
Benzo(a)anthracene	ND	1.9	µg/L	1		MADEP EPH rev 2.1	4/5/25	4/7/25 14:57	SNB
Benzo(a)pyrene	ND	1.9	µg/L	1		MADEP EPH rev 2.1	4/5/25	4/7/25 14:57	SNB
Benzo(b)fluoranthene	ND	1.9	µg/L	1		MADEP EPH rev 2.1	4/5/25	4/7/25 14:57	SNB
Benzo(g,h,i)perylene	ND	1.9	µg/L	1		MADEP EPH rev 2.1	4/5/25	4/7/25 14:57	SNB
Benzo(k)fluoranthene	ND	1.9	µg/L	1		MADEP EPH rev 2.1	4/5/25	4/7/25 14:57	SNB
Chrysene	ND	1.9	µg/L	1		MADEP EPH rev 2.1	4/5/25	4/7/25 14:57	SNB
Dibenz(a,h)anthracene	ND	1.9	µg/L	1		MADEP EPH rev 2.1	4/5/25	4/7/25 14:57	SNB
Fluoranthene	ND	1.9	µg/L	1		MADEP EPH rev 2.1	4/5/25	4/7/25 14:57	SNB
Fluorene	ND	1.9	µg/L	1		MADEP EPH rev 2.1	4/5/25	4/7/25 14:57	SNB
Indeno(1,2,3-cd)pyrene	ND	1.9	µg/L	1		MADEP EPH rev 2.1	4/5/25	4/7/25 14:57	SNB
2-Methylnaphthalene	ND	1.9	µg/L	1		MADEP EPH rev 2.1	4/5/25	4/7/25 14:57	SNB
Naphthalene	ND	1.9	µg/L	1		MADEP EPH rev 2.1	4/5/25	4/7/25 14:57	SNB
Phenanthrene	ND	1.9	µg/L	1		MADEP EPH rev 2.1	4/5/25	4/7/25 14:57	SNB
Pyrene	ND	1.9	µg/L	1		MADEP EPH rev 2.1	4/5/25	4/7/25 14:57	SNB

Surrogates	% Recovery	Recovery Limits	Flag/Qual	
Chlorooctadecane (COD)	78.7	40-140		4/7/25 14:57
o-Terphenyl (OTP)	78.7	40-140		4/7/25 14:57
2-Bromonaphthalene	91.4	40-140		4/7/25 14:57
2-Fluorobiphenyl	92.4	40-140		4/7/25 14:57

Pace Analytical Services, LLC - East Longmeadow, Ma

39 Spruce Street * East Longmeadow, MA 01028 * FAX 413/525-6405 * TEL. 413/525-2332

Project Location: 185 Holdsworth Way., Amherst, M Sample Description: Work Order: 25D0408

Date Received: 4/4/2025

Field Sample #: MW-3 Sampled: 4/4/2025 12:15

Sample ID: 25D0408-03

Sample Matrix: Ground Water

Polychlorinated Biphenyls By GC/ECD

Analyte	Results	RL	Units	Dilution	Flag/Qual	Method	Date Prepared	Date/Time Analyzed	Analyst
Aroclor-1016 [1]	ND	0.19	µg/L	1		SW-846 8082A	4/5/25	4/8/25 2:53	MEW
Aroclor-1221 [1]	ND	0.19	µg/L	1		SW-846 8082A	4/5/25	4/8/25 2:53	MEW
Aroclor-1232 [1]	ND	0.19	µg/L	1		SW-846 8082A	4/5/25	4/8/25 2:53	MEW
Aroclor-1242 [1]	ND	0.19	µg/L	1		SW-846 8082A	4/5/25	4/8/25 2:53	MEW
Aroclor-1248 [1]	ND	0.19	µg/L	1		SW-846 8082A	4/5/25	4/8/25 2:53	MEW
Aroclor-1254 [1]	ND	0.19	µg/L	1		SW-846 8082A	4/5/25	4/8/25 2:53	MEW
Aroclor-1260 [1]	ND	0.19	µg/L	1		SW-846 8082A	4/5/25	4/8/25 2:53	MEW
Aroclor-1262 [1]	ND	0.19	µg/L	1		SW-846 8082A	4/5/25	4/8/25 2:53	MEW
Aroclor-1268 [1]	ND	0.19	µg/L	1		SW-846 8082A	4/5/25	4/8/25 2:53	MEW

Surrogates	% Recovery	Recovery Limits	Flag/Qual		
Decachlorobiphenyl [1]	56.2	30-150		4/8/25 2:53	
Decachlorobiphenyl [2]	68.0	30-150		4/8/25 2:53	
Tetrachloro-m-xylene [1]	63.9	30-150		4/8/25 2:53	
Tetrachloro-m-xylene [2]	73.3	30-150		4/8/25 2:53	

Pace Analytical Services, LLC - East Longmeadow, Ma

39 Spruce Street * East Longmeadow, MA 01028 * FAX 413/525-6405 * TEL. 413/525-2332

Project Location: 185 Holdsworth Way., Amherst, M Sample Description: Work Order: 25D0408

Date Received: 4/4/2025

Field Sample #: MW-3 Sampled: 4/4/2025 12:15

Sample ID: 25D0408-03

Sample Matrix: Ground Water

Petroleum Hydrocarbons Analyses - EPH

Analyte	Results	RL	Units	Dilution	Flag/Qual	Method	Date Prepared	Date/Time Analyzed	Analyst
C9-C18 Aliphatics	ND	95	µg/L	1		MADEP EPH rev 2.1	4/5/25	4/7/25 15:16	SNB
C19-C36 Aliphatics	ND	95	µg/L	1		MADEP EPH rev 2.1	4/5/25	4/7/25 15:16	SNB
Unadjusted C11-C22 Aromatics	ND	95	µg/L	1		MADEP EPH rev 2.1	4/5/25	4/7/25 15:16	SNB
C11-C22 Aromatics	ND	95	µg/L	1		MADEP EPH rev 2.1	4/5/25	4/7/25 15:16	SNB
Acenaphthene	ND	1.9	µg/L	1		MADEP EPH rev 2.1	4/5/25	4/7/25 15:16	SNB
Acenaphthylene	ND	1.9	µg/L	1		MADEP EPH rev 2.1	4/5/25	4/7/25 15:16	SNB
Anthracene	ND	1.9	µg/L	1		MADEP EPH rev 2.1	4/5/25	4/7/25 15:16	SNB
Benzo(a)anthracene	ND	1.9	µg/L	1		MADEP EPH rev 2.1	4/5/25	4/7/25 15:16	SNB
Benzo(a)pyrene	ND	1.9	µg/L	1		MADEP EPH rev 2.1	4/5/25	4/7/25 15:16	SNB
Benzo(b)fluoranthene	ND	1.9	µg/L	1		MADEP EPH rev 2.1	4/5/25	4/7/25 15:16	SNB
Benzo(g,h,i)perylene	ND	1.9	µg/L	1		MADEP EPH rev 2.1	4/5/25	4/7/25 15:16	SNB
Benzo(k)fluoranthene	ND	1.9	µg/L	1		MADEP EPH rev 2.1	4/5/25	4/7/25 15:16	SNB
Chrysene	ND	1.9	µg/L	1		MADEP EPH rev 2.1	4/5/25	4/7/25 15:16	SNB
Dibenz(a,h)anthracene	ND	1.9	µg/L	1		MADEP EPH rev 2.1	4/5/25	4/7/25 15:16	SNB
Fluoranthene	ND	1.9	µg/L	1		MADEP EPH rev 2.1	4/5/25	4/7/25 15:16	SNB
Fluorene	ND	1.9	µg/L	1		MADEP EPH rev 2.1	4/5/25	4/7/25 15:16	SNB
Indeno(1,2,3-cd)pyrene	ND	1.9	µg/L	1		MADEP EPH rev 2.1	4/5/25	4/7/25 15:16	SNB
2-Methylnaphthalene	ND	1.9	µg/L	1		MADEP EPH rev 2.1	4/5/25	4/7/25 15:16	SNB
Naphthalene	ND	1.9	µg/L	1		MADEP EPH rev 2.1	4/5/25	4/7/25 15:16	SNB
Phenanthrene	ND	1.9	µg/L	1		MADEP EPH rev 2.1	4/5/25	4/7/25 15:16	SNB
Pyrene	ND	1.9	µg/L	1		MADEP EPH rev 2.1	4/5/25	4/7/25 15:16	SNB

Surrogates	% Recovery	Recovery Limits	Flag/Qual	
Chlorooctadecane (COD)	78.8	40-140		4/7/25 15:16
o-Terphenyl (OTP)	78.8	40-140		4/7/25 15:16
2-Bromonaphthalene	85.8	40-140		4/7/25 15:16
2-Fluorobiphenyl	85.9	40-140		4/7/25 15:16

Pace Analytical Services, LLC - East Longmeadow, Ma

39 Spruce Street * East Longmeadow, MA 01028 * FAX 413/525-6405 * TEL. 413/525-2332

Sample Extraction Data

Prep Method:SW-846 3510C **Analytical Method:MADEP EPH rev 2.1**

Lab Number [Field ID]	Batch	Initial [mL]	Final [mL]	Date
25D0408-01 [MW-1]	B402363	1030	2.00	04/05/25
25D0408-02 [MW-2]	B402363	1050	2.00	04/05/25
25D0408-03 [MW-3]	B402363	1050	2.00	04/05/25

Prep Method:SW-846 3510C **Analytical Method:SW-846 8082A**

Lab Number [Field ID]	Batch	Initial [mL]	Final [mL]	Date
25D0408-01 [MW-1]	B402370	103	2.00	04/05/25
25D0408-02 [MW-2]	B402370	105	2.00	04/05/25
25D0408-03 [MW-3]	B402370	107	2.00	04/05/25

39 Spruce Street * East Longmeadow, MA 01028 * FAX 413/525-6405 * TEL. 413/525-2332

QUALITY CONTROL

Polychlorinated Biphenyls By GC/ECD - Quality Control

Analyte	Result	Reporting Limit	Units	Spike Level	Source Result	%REC	%REC Limits	RPD	RPD Limit	Notes
Batch B402370 - SW-846 3510C										
Blank (B402370-BLK1)				Prepared: 04/05/25 Analyzed: 04/08/25						
Aroclor-1016	ND	0.20	µg/L							
Aroclor-1016 [2C]	ND	0.20	µg/L							
Aroclor-1221	ND	0.20	µg/L							
Aroclor-1221 [2C]	ND	0.20	µg/L							
Aroclor-1232	ND	0.20	µg/L							
Aroclor-1232 [2C]	ND	0.20	µg/L							
Aroclor-1242	ND	0.20	µg/L							
Aroclor-1242 [2C]	ND	0.20	µg/L							
Aroclor-1248	ND	0.20	µg/L							
Aroclor-1248 [2C]	ND	0.20	µg/L							
Aroclor-1254	ND	0.20	µg/L							
Aroclor-1254 [2C]	ND	0.20	µg/L							
Aroclor-1260	ND	0.20	µg/L							
Aroclor-1260 [2C]	ND	0.20	µg/L							
Aroclor-1262	ND	0.20	µg/L							
Aroclor-1262 [2C]	ND	0.20	µg/L							
Aroclor-1268	ND	0.20	µg/L							
Aroclor-1268 [2C]	ND	0.20	µg/L							
Surrogate: Decachlorobiphenyl	*3.09*		µg/L	4.000		77.3	30-150			
Surrogate: Decachlorobiphenyl [2C]	*3.76*		µg/L	4.000		94.0	30-150			
Surrogate: Tetrachloro-m-xylene	*2.00*		µg/L	4.000		50.0	30-150			
Surrogate: Tetrachloro-m-xylene [2C]	*2.31*		µg/L	4.000		57.7	30-150			
LCS (B402370-BS1)				Prepared: 04/05/25 Analyzed: 04/08/25						
Aroclor-1016	0.63	0.20	µg/L	1.000		63.5	40-140			
Aroclor-1016 [2C]	0.72	0.20	µg/L	1.000		71.9	40-140			
Aroclor-1260	0.71	0.20	µg/L	1.000		70.5	40-140			
Aroclor-1260 [2C]	0.89	0.20	µg/L	1.000		89.0	40-140			
Surrogate: Decachlorobiphenyl	*3.09*		µg/L	4.000		77.2	30-150			
Surrogate: Decachlorobiphenyl [2C]	*3.74*		µg/L	4.000		93.4	30-150			
Surrogate: Tetrachloro-m-xylene	*1.94*		µg/L	4.000		48.5	30-150			
Surrogate: Tetrachloro-m-xylene [2C]	*2.33*		µg/L	4.000		58.2	30-150			
LCS Dup (B402370-BSD1)				Prepared: 04/05/25 Analyzed: 04/08/25						
Aroclor-1016	0.67	0.20	µg/L	1.000		67.0	40-140	5.38	20	
Aroclor-1016 [2C]	0.74	0.20	µg/L	1.000		74.2	40-140	3.19	20	
Aroclor-1260	0.75	0.20	µg/L	1.000		75.1	40-140	6.30	20	
Aroclor-1260 [2C]	0.90	0.20	µg/L	1.000		89.6	40-140	0.594	20	
Surrogate: Decachlorobiphenyl	*2.14*		µg/L	4.000		53.5	30-150			
Surrogate: Decachlorobiphenyl [2C]	*2.61*		µg/L	4.000		65.2	30-150			
Surrogate: Tetrachloro-m-xylene	*2.27*		µg/L	4.000		56.7	30-150			
Surrogate: Tetrachloro-m-xylene [2C]	*2.64*		µg/L	4.000		65.9	30-150			

39 Spruce Street * East Longmeadow, MA 01028 * FAX 413/525-6405 * TEL. 413/525-2332

QUALITY CONTROL

Petroleum Hydrocarbons Analyses - EPH - Quality Control

Analyte	Result	Reporting Limit	Units	Spike Level	Source Result	%REC	%REC Limits	RPD	RPD Limit	Notes
Batch B402363 - SW-846 3510C										
Blank (B402363-BLK1)				Prepared: 04/05/25 Analyzed: 04/07/25						
C9-C18 Aliphatics	ND	100	µg/L							
C19-C36 Aliphatics	ND	100	µg/L							
Unadjusted C11-C22 Aromatics	ND	100	µg/L							
C11-C22 Aromatics	ND	100	µg/L							
Acenaphthene	ND	2.0	µg/L							
Acenaphthylene	ND	2.0	µg/L							
Anthracene	ND	2.0	µg/L							
Benzo(a)anthracene	ND	2.0	µg/L							
Benzo(a)pyrene	ND	2.0	µg/L							
Benzo(b)fluoranthene	ND	2.0	µg/L							
Benzo(g,h,i)perylene	ND	2.0	µg/L							
Benzo(k)fluoranthene	ND	2.0	µg/L							
Chrysene	ND	2.0	µg/L							
Dibenz(a,h)anthracene	ND	2.0	µg/L							
Fluoranthene	ND	2.0	µg/L							
Fluorene	ND	2.0	µg/L							
Indeno(1,2,3-cd)pyrene	ND	2.0	µg/L							
2-Methylnaphthalene	ND	2.0	µg/L							
Naphthalene	ND	2.0	µg/L							
Phenanthrene	ND	2.0	µg/L							
Pyrene	ND	2.0	µg/L							
Naphthalene-aliphatic fraction	ND	2.0	µg/L							
2-Methylnaphthalene-aliphatic fraction	ND	2.0	µg/L							
Surrogate: Chlorooctadecane (COD)	*85.5*		µg/L	100.0		85.5	40-140			
Surrogate: o-Terphenyl (OTP)	*83.5*		µg/L	100.0		83.5	40-140			
Surrogate: 2-Bromonaphthalene	*89.8*		µg/L	100.0		89.8	40-140			
Surrogate: 2-Fluorobiphenyl	*90.9*		µg/L	100.0		90.9	40-140			
LCS (B402363-BS1)				Prepared: 04/05/25 Analyzed: 04/07/25						
C9-C18 Aliphatics	511	100	µg/L	600.0		85.1	40-140			
C19-C36 Aliphatics	776	100	µg/L	800.0		97.0	40-140			
Unadjusted C11-C22 Aromatics	1570	100	µg/L	1700		92.4	40-140			
Acenaphthene	81.0	2.0	µg/L	100.0		81.0	40-140			
Acenaphthylene	74.1	2.0	µg/L	100.0		74.1	40-140			
Anthracene	90.9	2.0	µg/L	100.0		90.9	40-140			
Benzo(a)anthracene	90.9	2.0	µg/L	100.0		90.9	40-140			
Benzo(a)pyrene	88.2	2.0	µg/L	100.0		88.2	40-140			
Benzo(b)fluoranthene	85.5	2.0	µg/L	100.0		85.5	40-140			
Benzo(g,h,i)perylene	83.5	2.0	µg/L	100.0		83.5	40-140			
Benzo(k)fluoranthene	91.1	2.0	µg/L	100.0		91.1	40-140			
Chrysene	89.9	2.0	µg/L	100.0		89.9	40-140			
Dibenz(a,h)anthracene	85.9	2.0	µg/L	100.0		85.9	40-140			
Fluoranthene	91.0	2.0	µg/L	100.0		91.0	40-140			
Fluorene	86.2	2.0	µg/L	100.0		86.2	40-140			
Indeno(1,2,3-cd)pyrene	81.6	2.0	µg/L	100.0		81.6	40-140			
2-Methylnaphthalene	75.8	2.0	µg/L	100.0		75.8	40-140			
Naphthalene	68.2	2.0	µg/L	100.0		68.2	40-140			
Phenanthrene	90.0	2.0	µg/L	100.0		90.0	40-140			
Pyrene	91.1	2.0	µg/L	100.0		91.1	40-140			
Naphthalene-aliphatic fraction	ND	2.0	µg/L	100.0			0-5			
2-Methylnaphthalene-aliphatic fraction	ND	2.0	µg/L	100.0			0-5			
Surrogate: Chlorooctadecane (COD)	*88.4*		µg/L	100.0		88.4	40-140			

39 Spruce Street * East Longmeadow, MA 01028 * FAX 413/525-6405 * TEL. 413/525-2332

QUALITY CONTROL

Petroleum Hydrocarbons Analyses - EPH - Quality Control

Analyte	Result	Reporting Limit	Units	Spike Level	Source Result	%REC	%REC Limits	RPD	RPD Limit	Notes
Batch B402363 - SW-846 3510C										
LCS (B402363-BS1)				Prepared: 04/05/25 Analyzed: 04/07/25						
Surrogate: o-Terphenyl (OTP)	*88.8*		µg/L	100.0		88.8	40-140			
Surrogate: 2-Bromonaphthalene	*96.1*		µg/L	100.0		96.1	40-140			
Surrogate: 2-Fluorobiphenyl	*97.4*		µg/L	100.0		97.4	40-140			
LCS Dup (B402363-BSD1)				Prepared: 04/05/25 Analyzed: 04/07/25						
C9-C18 Aliphatics	506	100	µg/L	600.0		84.4	40-140	0.861	25	
C19-C36 Aliphatics	782	100	µg/L	800.0		97.8	40-140	0.851	25	
Unadjusted C11-C22 Aromatics	1750	100	µg/L	1700		103	40-140	10.8	25	
Acenaphthene	90.8	2.0	µg/L	100.0		90.8	40-140	11.3	25	
Acenaphthylene	82.9	2.0	µg/L	100.0		82.9	40-140	11.2	25	
Anthracene	102	2.0	µg/L	100.0		102	40-140	11.9	25	
Benzo(a)anthracene	103	2.0	µg/L	100.0		103	40-140	12.7	25	
Benzo(a)pyrene	99.7	2.0	µg/L	100.0		99.7	40-140	12.2	25	
Benzo(b)fluoranthene	97.0	2.0	µg/L	100.0		97.0	40-140	12.6	25	
Benzo(g,h,i)perylene	94.3	2.0	µg/L	100.0		94.3	40-140	12.2	25	
Benzo(k)fluoranthene	104	2.0	µg/L	100.0		104	40-140	12.7	25	
Chrysene	102	2.0	µg/L	100.0		102	40-140	12.9	25	
Dibenz(a,h)anthracene	97.3	2.0	µg/L	100.0		97.3	40-140	12.5	25	
Fluoranthene	103	2.0	µg/L	100.0		103	40-140	12.0	25	
Fluorene	96.8	2.0	µg/L	100.0		96.8	40-140	11.5	25	
Indeno(1,2,3-cd)pyrene	92.3	2.0	µg/L	100.0		92.3	40-140	12.2	25	
2-Methylnaphthalene	84.8	2.0	µg/L	100.0		84.8	40-140	11.2	25	
Naphthalene	76.6	2.0	µg/L	100.0		76.6	40-140	11.6	25	
Phenanthrene	102	2.0	µg/L	100.0		102	40-140	12.0	25	
Pyrene	103	2.0	µg/L	100.0		103	40-140	12.0	25	
Naphthalene-aliphatic fraction	ND	2.0	µg/L	100.0			0-5			
2-Methylnaphthalene-aliphatic fraction	ND	2.0	µg/L	100.0			0-5			
Surrogate: Chlorooctadecane (COD)	*86.7*		µg/L	100.0		86.7	40-140			
Surrogate: o-Terphenyl (OTP)	*98.2*		µg/L	100.0		98.2	40-140			
Surrogate: 2-Bromonaphthalene	*110*		µg/L	100.0		110	40-140			
Surrogate: 2-Fluorobiphenyl	*112*		µg/L	100.0		112	40-140			

Pace Analytical Services, LLC - East Longmeadow, Ma

39 Spruce Street * East Longmeadow, MA 01028 * FAX 413/525-6405 * TEL. 413/525-2332

IDENTIFICATION SUMMARY
FOR SINGLE COMPONENT ANALYTES

SW-846 8082A

LCS

Lab Sample ID: B402370-BS1

Date(s) Analyzed: 04/08/2025 04/08/2025

Instrument ID (1): ECD10

Instrument ID (2): ECD10

GC Column (1): ID: (mm)

GC Column (2): ID: (mm)

ANALYTE	COL	RT	RT WINDOW		CONCENTRATION	%RPD
			FROM	TO		
Aroclor-1016	1	0.000	0.000	0.000	0.63	
	2	0.000	0.000	0.000	0.72	11.8
Aroclor-1260	1	0.000	0.000	0.000	0.71	
	2	0.000	0.000	0.000	0.89	22.5

Pace Analytical Services, LLC - East Longmeadow, Ma

39 Spruce Street * East Longmeadow, MA 01028 * FAX 413/525-6405 * TEL. 413/525-2332

IDENTIFICATION SUMMARY FOR SINGLE COMPONENT ANALYTES

SW-846 8082A

LCS Dup

Lab Sample ID: B402370-BSD1 Date(s) Analyzed: 04/08/2025 04/08/2025

Instrument ID (1): ECD10 Instrument ID (2): ECD10

GC Column (1): ID: (mm) GC Column (2): ID: (mm)

ANALYTE	COL	RT	RT WINDOW		CONCENTRATION	%RPD
			FROM	TO		
Aroclor-1016	1	0.000	0.000	0.000	0.67	
	2	0.000	0.000	0.000	0.74	9.9
Aroclor-1260	1	0.000	0.000	0.000	0.75	
	2	0.000	0.000	0.000	0.90	18.2

39 Spruce Street * East Longmeadow, MA 01028 * FAX 413/525-6405 * TEL. 413/525-2332

FLAG/QUALIFIER SUMMARY

*	QC result is outside of established limits.
†	Wide recovery limits established for difficult compound.
‡	Wide RPD limits established for difficult compound.
#	Data exceeded client recommended or regulatory level
ND	Not Detected
RL	Reporting Limit is at the level of quantitation (LOQ)
DL	Detection Limit is the lower limit of detection determined by the MDL study
MCL	Maximum Contaminant Level

Percent recoveries and relative percent differences (RPDs) are determined by the software using values in the calculation which have not been rounded.

No results have been blank subtracted unless specified in the case narrative section.

Pace Analytical Services, LLC - East Longmeadow, Ma

39 Spruce Street * East Longmeadow, MA 01028 * FAX 413/525-6405 * TEL. 413/525-2332

CERTIFICATIONS

Certified Analyses included in this Report

Analyte	Certifications
MADEP EPH rev 2.1 in Water	
C9-C18 Aliphatics	CT,NC,ME,NH-P
C19-C36 Aliphatics	CT,NC,ME,NH-P
Unadjusted C11-C22 Aromatics	CT,NC,ME,NH-P
C11-C22 Aromatics	CT,NC,ME,NH-P
Acenaphthene	CT,NC,ME,NH-P
Acenaphthylene	CT,NC,ME,NH-P
Anthracene	CT,NC,ME,NH-P
Benzo(a)anthracene	CT,NC,ME,NH-P
Benzo(a)pyrene	CT,NC,ME,NH-P
Benzo(b)fluoranthene	CT,NC,ME,NH-P
Benzo(g,h,i)perylene	CT,NC,ME,NH-P
Benzo(k)fluoranthene	CT,NC,ME,NH-P
Chrysene	CT,NC,ME,NH-P
Dibenz(a,h)anthracene	CT,NC,ME,NH-P
Fluoranthene	CT,NC,ME,NH-P
Fluorene	CT,NC,ME
Indeno(1,2,3-cd)pyrene	CT,NC,ME,NH-P
2-Methylnaphthalene	CT,NC
Naphthalene	CT,NC,ME,NH-P
Phenanthrene	CT,NC,ME,NH-P
Pyrene	CT,NC,ME,NH-P
SW-846 8082A in Water	
Aroclor-1016	CT,NH,NY,NC,ME,VA,PA,NJ
Aroclor-1016 [2C]	CT,NH,NY,NC,ME,VA,PA,NJ
Aroclor-1221	CT,NH,NY,NC,ME,VA,PA,NJ
Aroclor-1221 [2C]	CT,NH,NY,NC,ME,VA,PA,NJ
Aroclor-1232	CT,NH,NY,NC,ME,VA,PA,NJ
Aroclor-1232 [2C]	CT,NH,NY,NC,ME,VA,PA,NJ
Aroclor-1242	CT,NH,NY,NC,ME,VA,PA,NJ
Aroclor-1242 [2C]	CT,NH,NY,NC,ME,VA,PA,NJ
Aroclor-1248	CT,NH,NY,NC,ME,VA,PA,NJ
Aroclor-1248 [2C]	CT,NH,NY,NC,ME,VA,PA,NJ
Aroclor-1254	CT,NH,NY,NC,ME,VA,PA,NJ
Aroclor-1254 [2C]	CT,NH,NY,NC,ME,VA,PA,NJ
Aroclor-1260	CT,NH,NY,NC,ME,VA,PA,NJ
Aroclor-1260 [2C]	CT,NH,NY,NC,ME,VA,PA,NJ
Aroclor-1262	NH,NY,NC,ME,VA,PA,NJ
Aroclor-1262 [2C]	NH,NY,NC,ME,VA,PA,NJ
Aroclor-1268	NH,NY,NC,ME,VA,PA,NJ
Aroclor-1268 [2C]	NH,NY,NC,ME,VA,PA,NJ

Pace Analytical Services, LLC - East Longmeadow, Ma

39 Spruce Street * East Longmeadow, MA 01028 * FAX 413/525-6405 * TEL. 413/525-2332

Pace Analytical Services, LLC - East Longmeadow, Ma, operates under the following certifications and accreditations:

Code	Description	Number	Expires
CT	Connecticut Department of Public Health	PH-0821	12/31/2026
NY	New York State Department of Health	10899 NELAP	04/1/2026
NH	New Hampshire Environmental Lab	2516 NELAP	02/5/2026
NC	North Carolina Div. of Water Quality	652	12/31/2025
NJ	New Jersey DEP	MA007 NELAP	06/30/2025
ME	State of Maine	MA00100	06/9/2025
VA	Commonwealth of Virginia	460217	12/14/2025
NH-P	New Hampshire Environmental Lab	2557 NELAP	09/6/2025
PA	Commonwealth of Pennsylvania DEP	68-05812	06/30/2026

25D0408 KGM

Pace Analytical

Phone: 413-525-2332
Fax: 413-525-6405
Access COC's and Support Requests

http://www.pacelabs.com

CHAIN OF CUSTODY RECORD

39 Spruce Street
East Longmeadow, MA 01028

Doc # 381 Rev 5_07/13/2021

Page 1 of 1

Company Name:	Roux
Address:	200 Summit Drive Suite 500 Burlington MA
Phone:	413 875 5232
Project Name:	PVTA UMASS
Project Location:	555 Hobbsworth Way Amherst MA
Project Number:	4218.0002M000
Project Manager:	Karrien Marius
Pace Quote Name/Number:	Q30853
Invoice Recipient:	
Sampled By:	Kyle McCaffery

Requested Turnaround Time			
7-Day	☐	10-Day	☐
PFAS 10-Day (std)	☐	Due Date:	

Rush-Approval Required			
1-Day	☐	3-Day	☐
2-Day	☐	4-Day	☐

Dissolved Metals Samples	
○	Field Filtered
○	Lab to Filter

Orthophosphate Samples	
○	Field Filtered
○	Lab to Filter

Data Delivery

Format: PDF ☒ EXCEL ☒
Other: ROUX EQuIS EZ
CLP Like Data Pkg Required: ☐
Email To: KMcCaffery@rouxinc.com
Fax To #: MADB Manager@rouxinc.com

PCB ONLY

SOXHLET ☐

NON SOXHLET ☒

ANALYSIS REQUESTED

Pace Work Order#	Client Sample ID / Description	Beginning Date/Time	Ending Date/Time	COMP/GRAB	[1]Matrix Code	Conc Code	VIALS	GLASS	PLASTIC	BACTERIA	ENCORE	PCB EPA 8082A	EPH w/ranges + targets
1	MW-1	1420	4/4/25	G	GW			X				X	X
2	MW-2	1020	4/4/25	G	GW			X				X	X
3	MW-3	1215	4/4/25	G	GW			X				X	X

Relinquished by: (signature)	Date/Time:
	4/4/25 1630
Received by: (signature)	Date/Time:
	4/4/25 1682
Relinquished by: (signature)	Date/Time:
Received by: (signature)	Date/Time:
Relinquished by: (signature)	Date/Time:
Received by: (signature)	Date/Time:
Relinquished by: (signature)	Date/Time:
Received by: (signature)	Date/Time:

Client Comments:

Detection Limit Requirements	
MA	
CT	
Other:	

Special Requirements	
☒	MA MCP Required
	MCP Certification Form Required
☐	CT RCP Required
	RCP Certification Form Required
☐	MA State DW Required
PWSID #	

Please use the following codes to indicate possible sample concentration within the Conc Code column above:
H - High; M - Medium; L - Low; C - Clean; U - Unknown

NELAC and AIHA-LAP, LLC Accredited

Project Entity

Government ☐ Municipality ☐ MWRA ☐ WRTA ☐
Federal ☐ 21 J ☐ School ☐
City ☐ Brownfield ☐ MBTA ☐

Other

☐ Chromatogram
☐ *AIHA-LAP,LLC*

Lab Comments:

Disclaimer: Pace Analytical is not responsible for any omitted information on the Chain of Custody. The Chain of Custody is a legal document that must be complete and accurate and is used to determine what analyses the laboratory will perform. Any missing information is not the laboratory's responsibility. Pace Analytical values your partnership on each project and will try to assist with missing information, but will not be held accountable.

[2] Preservation Code

Courier Use Only
Total Number Of:
VIALS_____
GLASS_____
PLASTIC_____
BACTERIA_____
ENCORE_____

Glassware in the fridge? Y / N
Glassware in freezer? Y / N
Prepackaged Cooler? Y / N

*Pace Analytical is not responsible for missing samples from prepacked coolers

[1] **Matrix Codes:**
GW = Ground Water
WW = Waste Water
DW = Drinking Water
A = Air
S = Soil
SL = Sludge
SOL = Solid
O = Other (please define)

[2] **Preservation Codes:**
I = Iced
H = HCL
M = Methanol
N = Nitric Acid
S = Sulfuric Acid
B = Sodium Bisulfate
X = Sodium Hydroxide
T = Sodium Thiosulfate
O = Other (please define)

Pace ANALYTICAL SERVICES	DC#_Title: ENV-FRM-ELON-0001 v08_Sample Receiving Checklist
	Effective Date: 06/11/2024

Log In Back-Sheet

Login Sample Receipt Checklist – (Rejection Criteria Listing – Using Acceptance Policy) Any False statement will be brought to the attention of the Client – True or False

Client: BOUX

Project: PVTA UMASS

MCP/RCP Required: MA-MCP

Deliverable Package Requirement: _____

Location: 85 Holdsworth Way Amherst, MA.

PWSID# (When Applicable): _____

Arrival Method:

Courier ☐ Fed Ex ☐ Walk In ☒ Other ☐ _____

Received By / Date / Time: MEM 4-4-25 1632

Back-Sheet By / Date / Time: SMW 4-4-25 1634

Temperature Method: gun # 4

WV samples: Yes (see note*) / No (follow normal procedure)

Temp X < 6° C Actual Temperature: 5.7

Rush Samples: Yes / No Notify _____

Short Hold: Yes / No Notify _____

	True	False
Received on Ice	☒	☐
Received in Cooler	☒	☐
Custody Seal: DATE TIME	☐	☒
COC Relinquished	☒	☐
COC/Samples Labels Agree	☒	☐
All Samples in Good Condition	☒	☐
Samples Received within Holding Time	☒	☐
Is there enough Volume	☒	☐
Proper Media/Container Used	☒	☐
Splitting Samples Required	☐	☒
MS/MSD	☐	☒
Trip Blanks	☐	☒
Lab to Filters	☐	☒
COC Legible	☒	☐

COC Included: (Check all included)

Client ☒ Analysis ☒ Sampler Name ☒

Project ☒ IDs ☒ Collection Date/Time ☒

All Samples Proper pH: N/A ☒ ☐

Notes regarding Samples/COC outside of SOP:

Additional Container Notes

Note: West Virginia requires all samples to have their temperature taken. Note any outliers.

Pace ANALYTICAL SERVICES	DC#_Title: ENV-FRM-ELON-0001 v08_Sample Receiving Checklist
	Effective Date: 06/11/2024

Sample			1	2	3	4	5	6	7	8	9	10	11	12	13	14	15	16	17	18	19	20
16oz Amb/Clear	Soils Jars (Circle Amb/Clear)																					
8oz Amb/Clear																						
4oz Amb/Clear																						
2oz Amb/Clear																						
Unpreserved	Ambers	1 Liter																				
HCL			2	2	2																	
Sulfuric																						
Sulfuric		250mL																				
Phosphoric																						
HCl																						
Unpreserved		100mL			2																	
Unpreserved		1 Liter																				
Sulfuric																						
Unpreserved		500mL																				
Sulfuric																						
Unpreserved		250mL																				
Trizma																						
Sulfuric																						
Nitric																						
NaOH																						
Ammonium Acetate																						
NaOH/Zinc																						
Unpreserved	VOA Vials																					
HCl																						
MeOH																						
D.I. Water																						
BiSulfate																						
Col/Bact	Other / Fill in																					

MADEP MCP Analytical Method Report Certification Form

Laboratory Name:	Pace New England	Project #:	25D0408
Project Location:	185 Holdsworth Way., Amherst, MA	RTN:	

This Form provides certifications for the following data set: [list Laboratory Sample ID Number(s)]

25D0408-01 thru 25D0408-03

Matrices: Water

CAM Protocol (check all that below)

8260 VOC CAM II A ( )	7470/7471 Hg CAM IIIB ( )	MassDEP VPH (GC/PID/FID) CAM IV A ( )	8082 PCB CAM V A (X)	9014 Total Cyanide/PAC CAM VI A ( )	6860 Perchlorate CAM VIII B ( )
8270 SVOC CAM II B ( )	7010 Metals CAM III C ( )	MassDEP VPH (GC/MS) CAM IV C ( )	8081 Pesticides CAM V B ( )	7196 Hex Cr CAM VI B ( )	MassDEP APH CAM IX A ( )
6010 Metals CAM III A ( )	6020 Metals CAM III D ( )	MassDEP EPH CAM IV B (X)	8151 Herbicides CAM V C ( )	8330 Explosives CAM VIII A ( )	TO-15 VOC CAM IX B ( )

Affirmative response to Questions A throughF is required for "Presumptive Certainty" status

A	Were all samples received in a condition consistent with those described on the Chain-of-Custody, properly preserved (including temperature) in the field or laboratory, and prepared/analyzed within method holding times?	☑ Yes	☐ No[1]
B	Were the analytical method(s) and all associated QC requirements specificed in the selected CAM protocol(s) followed?	☑ Yes	☐ No[1]
C	Were all required corrective actions and analytical response actions specified in the selected CAM protocol(s) implemented for all identified performance standard non-conformances?	☑ Yes	☐ No[1]
D	Does the laboratory report comply with all the reporting requirements specified in CAM VII A, Quality Assurance and Quality Control Guidlines for the Acquisition and Reporting of Analytical Data?	☑ Yes	☐ No[1]
E a	VPH, EPH, and APH Methods only: Was each method conducted without significant modification(s)? (Refer to the individual method(s) for a list of significant modifications).	☑ Yes	☐ No[1]
E b	APH and TO-15 Methods only: Was the complete analyte list reported for each method?	☐ Yes	☐ No[1]
F	Were all applicable CAM protocol QC and performance standard non-conformances identified and evaluated in a laboratory narrative (including all No responses to Qestions A through E)?	☑ Yes	☐ No[1]

A response to questions G, H and I below is required for "Presumptive Certainty" status

G	Were the reporting limits at or below all CAM reporting limits specified in the selected CAM protocol(s)?	☑ Yes	☐ No[1]

<u>Data User Note:</u> Data that achieve "Presumptive Certainty" status may not necessarily meet the data usability and representativeness requirements described in 310 CMR 40. 1056 (2)(k) and WSC-07-350.

H	Were all QC perfomance standards specified in the CAM protocol(s) achieved?	☑ Yes	☐ No[1]
I	Were results reported for the complete analyte list specified in the selected CAM protocol(s)?	☑ Yes	☐ No[1]

[1] *All Negative responses must be addressed in an attached Environmental Laboratory case narrative.*

I, the undersigned, attest under the pains and penalties of perjury that, based upon my personal inquiry of those responsible for obtaining the information, the material contained in this analytical report is, to the best of my knowledge and belief, accurate and complete.

Signature: Lisa Worthington Position: Technical Representative

Printed Name: Lisa A. Worthington Date: 04/09/25

APPENDIX D

Groundwater Sampling Records

LOW FLOW SAMPLING FIELD FORM[1]

Roux Associates, Inc. Massachusetts Office

Sampler: KM

Well ID: MW-1 | Initial Depth to Water: 15.43 feet (If LNAPL is present, contact PM) | Flow Through Cell Volume: 250mL | Depth to Top of Screen: 9 feet

Date: 4/4/25 | Depth to Bottom: 19.48 feet (To be measured AFTER sampling) | Depth to Bottom of Screen: 19 feet

Location/Site: PVTA UMASS | Depth to Pump Intake: ~10.5 feet

Project No: | Well Diameter: 2 inches

Water Quality Meter: In-Situ (YSI) Other: | Model / SN: YSI Proquatro 24D101112

Turbidimeter: (Geotech) HACH Other: | Model / SN: Turbidimeter 24035209

Purging Device: (Peristaltic) Bladder Pump Grundfos Other:

Water Level Device: (Interface Probe) Water Level Steel Tape Other:

Site Conditions: (Interior Well) / Exterior Well ; Weather: Sun ; Ambient Temp: 60 ; Other Conditions:

ALL spaces should be filled in. Use "NM" for "Not Measured" and justify WHY in comments

TIME (24-hr)	Purge Rate (ml/min)	Depth to Water (feet)	Drawdown (feet)	Temperature (°C)	Specific Conductance circle one: (uS/cm or mS/cm)	pH	ORP (mV)	Dissolved Oxygen (mg/L)	Turbidity (NTU)	Comments (color, odor, stabilization issues, pump rate change, discussions with PM, etc.)
1255	110	15.43	0.00	NM	NM	NM	NM	NM	NM	water is clear/colorless
1300	110	15.51	0.08	NM	NM	NM	NM	NM	NM	reduce pump speed
1305	110	15.52	0.09	NM	NM	NM	NM	NM	NM	attach flow through cell.
1310	100	15.52	0.09	16.0	699	9.64	-203.9	1.31	4.71	
1315	100	15.53	0.10	16.0	930	9.43	-217.2	0.88	0.02	
1320	100	15.54	0.11	15.9	1210	8.99	-214.0	0.56	0.02	
1325	100	15.54	0.11	16.0	1272	8.91	-213.8	0.59	0.02	
1330	100	15.55	0.12	15.9	1310	8.80	-238.1	0.41	0.02	
1335	100	15.57	0.14	15.9	1500	8.50	-257.4	0.18	0.02	reduce pump speed
1340	100	15.55	0.12	15.9	1561	8.41	-261.9	0.14	0.02	
1345	100	15.55	0.12	15.9	1633	8.28	-264.8	0.12	0.02	
1350	100	15.55	0.12	15.9	1699	8.13	-256.0	0.13	0.02	
1355	100	15.55	0.12	15.9	1724	8.08	-251.1	0.14	0.02	
1400	100	15.55	0.12	15.9	1737	7.97	-238.8	0.16	0.02	
1405	100	15.55	0.12	15.9	1793	7.89	-231.3	0.14	0.02	
1410	100	15.56	0.13	15.9	1813	7.83	-226.3	0.15	0.02	
1415	100	15.56	0.13	15.9	1847	7.79	-224.2	0.14	0.02	
1420	100	15.56	0.13	15.9	1856	7.77	-222.4	0.15	0.02	Stable sampling

Sample Time: 1420

Parameters Tested: (should match chain) VOCs SVOCs VPH (EPH) Pest/Herb (PCBs) Total Metals Diss. Metals Field Filtered

Duplicate taken? (circle one): (NO) YES (Duplicate ID:)

Other:

Drawdown (circle one): Water level is stable (YES) or NO (Notify PM)

Total Volume Purged: 2.25 gal

Additional Comments:

Indicator Field Parameters Stabilization Criteria (THREE consecutive readings)	
Drawdown (water level is stable; <0.3 ft from initial DTW is ideal)	**Temp.** (3%)
Turbidity (<5 NTU, 10% for values >5 NTU)	**pH** (+/- 0.1 unit)
DO (<0.5 mg/L, 10% for values >0.5 mg/L)	**ORP/Eh** (+/- 10 mV, <0.1 per 3 sec)
Specific Conductance (3%)	

SEE PAGE 2 FOR EXAMPLE CALCULATIONS

Purge Volumes (circle one) - if using volume method[1]							
Well Diameter (inches):	1/2	3/4	1	1.5	2	3	4
Gallons Per Foot:	0.010	0.023	0.041	0.092	0.163	0.367	0.653
Liters Per Foot:	0.039	0.087	0.154	0.348	0.618	1.390	2.471

[1] If unable to achieve a stable drawdown, purge at least three well volumes prior to sampling. Record parameters and total purge volume.

LOW FLOW SAMPLING FIELD FORM[1]

Roux Associates, Inc. Massachusetts Office

Sampler: KM

Well ID: MW-2 | Initial Depth to Water: 10.88 feet (If LNAPL is present, contact PM) | Flow Through Cell Volume: 250 mL | Depth to Top of Screen: 9 feet

Date: 4/4/25 | Depth to Bottom: 18.40 feet (To be measured AFTER sampling) | Depth to Bottom of Screen: 19 feet

Location/Site: PVTA UMass | Depth to Pump Intake: 12 feet

Project No: | Well Diameter: 2 inches

Water Quality Meter: In-Situ (YSI) Other: | Model / SN: YSI Pro Quatro 24D101112 | Purging Device: (Peristaltic) Bladder Pump Grundfos Other:

Turbidimeter: (Geotech) HACH Other: | Model / SN: Turbidimeter 24035209 | Water Level Device: (Interface Probe) Water Level Steel Tape Other:

Site Conditions: (Interior Well) / Exterior Well ; Weather: Partly Sunny ; Ambient Temp: 60°F ; Other Conditions:

ALL spaces should be filled in. Use "NM" for "Not Measured" and justify WHY in comments

TIME (24-hr)	Purge Rate (ml/min)	Depth to Water (feet)	Drawdown (feet)	Temperature (°C)	Specific Conductance circle one: (µS/cm or mS/cm)	pH	ORP (mV)	Dissolved Oxygen (mg/L)	Turbidity (NTU)	Comments (color, odor, stabilization issues, pump rate change, discussions with PM, etc.)
0935	130	10.88	0.00	NM	NM	NM	NM	NM	NM	water is clear/colorless
0940	120	10.92	0.04	NM	NM	NM	NM	NM	NM	attach flow through cell.
0945	120	10.93	0.05	15.4	532	6.98	178.6	0.21	20.1	
0950	120	10.93	0.05	15.4	522	6.99	156.7	0.07	17.6	
0955	120	10.94	0.06	15.4	517	6.99	129.5	0.47	19.8	
1000	120	10.94	0.06	15.4	513	6.99	122.7	0.39	18.2	water has yellowish hue
1005	120	10.95	0.07	15.4	509	6.99	100.6	0.19	16.6	
1010	120	10.96	0.08	15.4	506	6.99	93.7	0.16	19.0	reduce pump speed
1015	120	10.95	0.07	15.4	503	6.98	88.1	0.14	18.1	
1020	120	10.95	0.07	15.4	502	6.98	85.8	0.16	19.2	stable sampling

Sample Time: 1020

Parameters Tested: (should match chain) VOCs SVOCs VPH (EPH) Pest/Herb (PCBs) Total Metals Diss. Metals Field Filtered | Duplicate taken? (circle one): (NO) YES (Duplicate ID:)

Other:

Drawdown (circle one): Water level is stable (YES) or NO (Notify PM) | Total Volume Purged: 1.25 gal

Additional Comments:

Indicator Field Parameters Stabilization Criteria (THREE consecutive readings)	
Drawdown (water level is stable; <0.3 ft from initial DTW is ideal)	**Temp.** (3%)
Turbidity (<5 NTU, 10% for values >5 NTU)	**pH** (+/- 0.1 unit)
DO (<0.5 mg/L, 10% for values >0.5 mg/L)	**ORP/Eh** (+/- 10 mV, <0.1 per 3 sec)
Specific Conductance (3%)	

SEE PAGE 2 FOR EXAMPLE CALCULATIONS

Purge Volumes (circle one) - if using volume method[1]							
Well Diameter (inches):	1/2	3/4	1	1.5	2	3	4
Gallons Per Foot:	0.010	0.023	0.041	0.092	0.163	0.367	0.653
Liters Per Foot:	0.039	0.087	0.154	0.348	0.618	1.390	2.471

[1] If unable to achieve a stable drawdown, purge at least three well volumes prior to sampling. Record parameters and total purge volume.

LOW FLOW SAMPLING FIELD FORM[1]

Roux Associates, Inc. Massachusetts Office

Sampler: KM

Well ID: MW-3 | Initial Depth to Water: 15.33 feet (If LNAPL is present, contact PM) | Flow Through Cell Volume: 250 mL | Depth to Top of Screen: 9 feet

Date: 4/14/25 | Depth to Bottom: 18.63 feet (To be measured AFTER sampling) | Depth to Bottom of Screen: 19 feet

Location/Site: UMASS | Depth to Pump Intake: 16.5 feet

Project No: | Well Diameter: 2 inches

Water Quality Meter: In-Situ (YSI) Other: | Model / SN: YSI ProQuatro 24D101112

Turbidimeter: (Geotech) HACH Other: | Model / SN: Turbidimeter 24035209

Site Conditions: (Interior Well) / Exterior Well ; | Weather: Sun 60°F ; | Ambient Temp: 60°F ; | Other Conditions:

Purging Device: (Peristaltic) Bladder Pump Grundfos Other:

Water Level Device: (Interface Probe) Water Level Steel Tape Other:

ALL spaces should be filled in. Use "NM" for "Not Measured" and justify WHY in comments

TIME (24-hr)	Purge Rate (ml/min)	Depth to Water (feet)	Drawdown (feet)	Temperature (°C)	Specific Conductance circle one: µS/cm or mS/cm	pH	ORP (mV)	Dissolved Oxygen (mg/L)	Turbidity (NTU)	Comments (color, odor, stabilization issues, pump rate change, discussions with PM, etc.)
1100	125	15.33	0.00	NM	NM	NM	NM	NM	NM	water has yellowish hue
1105	115	15.80	0.47	NM	NM	NM	NM	NM	NM	reduce pump speed
1110	95	15.83	0.50	NM	NM	NM	NM	NM	NM	attach flow through cell
1115	95	15.97	0.64	15.0	1113	6.91	-130.6	0.16	30.3	
1120	95	16.00	0.67	14.9	1126	6.91	-135.9	0.15	30.4	
1125	105	16.10	0.77	14.9	1184	6.93	-146.0	0.15	33.9	reduce pump speed
1130	105	16.17	0.84	14.9	1202	6.94	-150.0	0.19	35.9	reduce pump speed
1135	90	16.14	0.81	14.9	1223	6.95	-150.0	0.21	42.3	
1140	90	16.14	0.81	15.0	1242	6.96	-151.5	0.18	40.8	
1145	90	16.14	0.81	14.9	1266	6.97	-154.6	0.17	24.5	
1150	90	16.14	0.81	14.9	1289	6.98	-157.3	0.15	19.8	
1155	90	16.14	0.81	14.9	1304	6.99	-158.2	0.15	15.6	
1200	90	16.16	0.83	14.9	1324	7.00	-159.6	0.13	9.39	
1205	90	16.08	0.75	14.9	1347	7.01	-160.0	0.14	4.95	water is clear and colorless
1210	90	16.07	0.74	15.0	1352	7.01	-160.1	0.14	2.59	
1215	90	16.07	0.74	15.0	1354	7.01	-160.4	0.14	2.80	Stable Sampling

Sample Time: 1215

Parameters Tested: (should match chain) VOCs SVOCs VPH (EPH) Pest/Herb (PCBs) Total Metals Diss. Metals Field Filtered

Duplicate taken? (circle one): (NO) YES (Duplicate ID:)

Other:

Drawdown (circle one): Water level is stable (YES) or NO (Notify PM)

Total Volume Purged: 1.5 gal

Additional Comments:

Indicator Field Parameters Stabilization Criteria (THREE consecutive readings)

Drawdown (water level is stable; <0.3 ft from initial DTW is ideal)	**Temp.** (3%)
Turbidity (<5 NTU, 10% for values >5 NTU)	**pH** (+/- 0.1 unit)
DO (<0.5 mg/L, 10% for values >0.5 mg/L)	**ORP/Eh** (+/- 10 mV, <0.1 per 3 sec)
Specific Conductance (3%)	

SEE PAGE 2 FOR EXAMPLE CALCULATIONS

Purge Volumes (circle one) - if using volume method[1]

Well Diameter (inches):	1/2	3/4	1	1.5	2	3	4
Gallons Per Foot:	0.010	0.023	0.041	0.092	0.163	0.367	0.653
Liters Per Foot:	0.039	0.087	0.154	0.348	0.618	1.390	2.471

[1] If unable to achieve a stable drawdown, purge at least three well volumes prior to sampling. Record parameters and total purge volume.